UD COMPONENT SYSTEM/COMPACT HI-FI SYSTEM

RXD-G3/G4/G5/G31/G51

SERVICE MANUAL

(UD-305/315/405/505/515)

KENWOOD

© 1996-2/B51-5149-00 (K/K) 4202

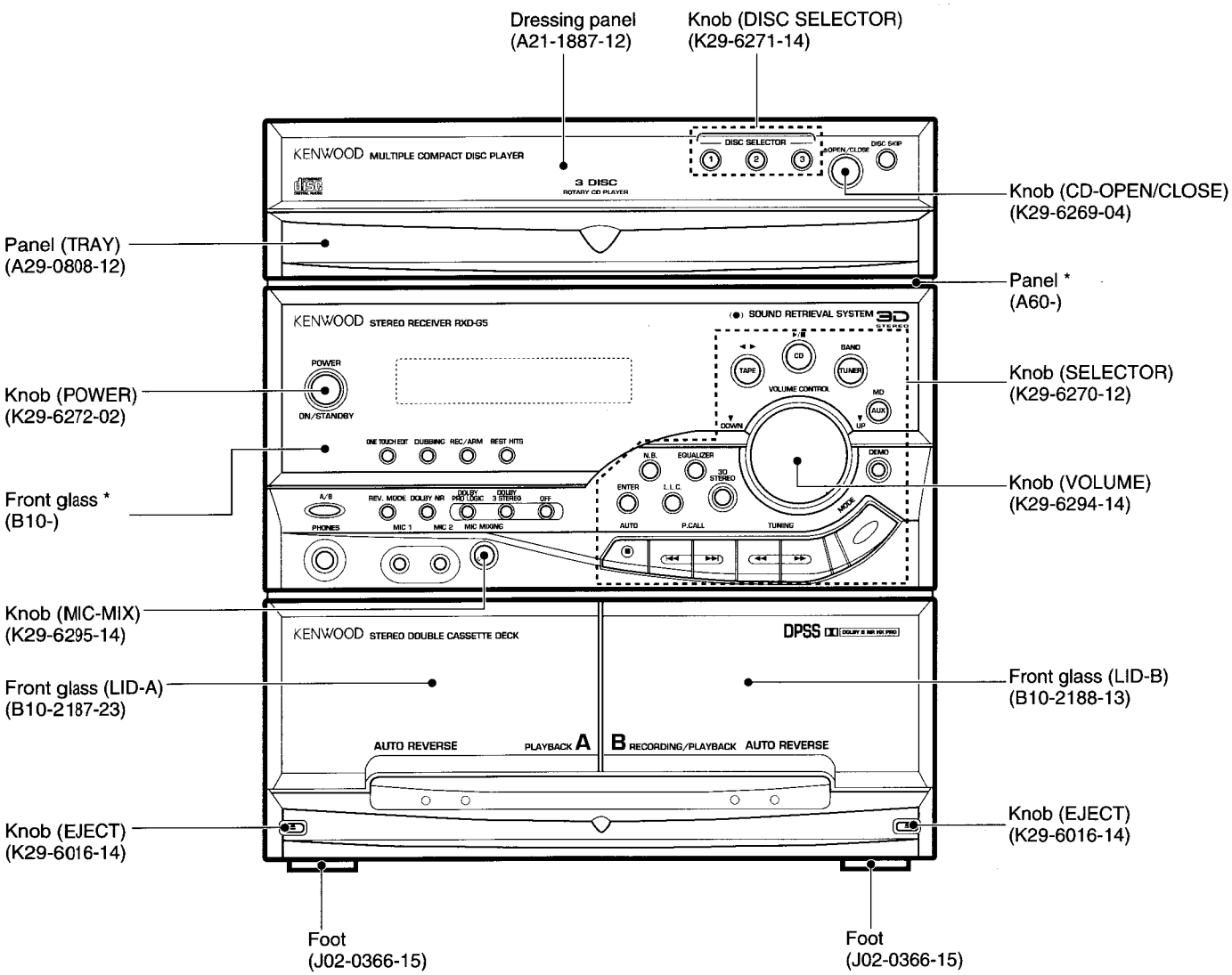

Illustration is RXD-G5.

*** Refer to parts list on page 63.**

PRECAUTIONS FOR REPAIR

- *For the disassembly of repair, see Service Manual* ***(B51-5091-00)*** *of* ***RXD-F3/F4/F41/F42.***
- *For the operation of the CD and the cassette (A or B deck) mechanism, see Service Manual* ***(B51-4869-00)*** *of* ***RXD-C3/C3L.***

In compliance with Federal Regulations, following are reproductions of labels on, or inside the product relating to laser product safety

KENWOOD-Corp. certifies this equipment conforms to DHH tions No. 21 CFR 1040. 10, Chapter 1, Subchapter J.

DANGER : Laser radiation when open and interlock defeated - AVOID DIRECT EXPOSURE TO BEAM.

RXD-G3/G4/G5/G31/G51

CONTENTS / ACCESSORIES

Contents

CONTENTS / ACCESSORIES 2
EXTERNAL VIEW / CAUTIONS 3
CONTROLS 5
REMOTE CONTROL UNIT 7
BLOCK DIAGRAM 8
CIRCUIT DESCRIPTION 11
ADJUSTMENT 19
WIRING DIAGRAM 23
PC BOARD 24
SCHEMATIC DIAGRAM 33
CASSETTE MECHANISM DESCRIPTION 57
EXPLODED VIEW
CD MECHANISM 58
CASSETTE DECK MECHANISM 59
UNIT 61
PARTS LIST 63
SPECIFICATIONS 78

Please see to the following service manual If you need to refer to the circuit description of ICs.

PCB No.	Ref. No.	IC Parts No.	Function	Service manual	
				Model Name	Page
X09	IC5	BU4094BCF	EXPANDER μ-COM	RXD-F3	P20,22
X28	IC6,7	BU4094BC	EXPANDER μ-COM	RXD-F3	P20,22
X32	IC6	BU4094BC	EXPANDER μ-COM	RXD-F3	P20,22
X14	IC2	NJU3718G			
X09	IC6	M65844P	EXPANDER μ-COM	RXD-F3	P21
			DIGITAL ECHO		P23
X28	IC3	HA12182F	DOLBY IC	RXD-F3	P25~27
X32	IC2	CXD2508AQ	CD DSP	RXD-F3	P28~P30

Accessories

FM indoor antenna (1)
(T90-0801-05) : K,P,Y,M,I,C,X
(T90-0809-05) : T,E

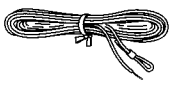

Speaker cord (2)
(E30-5255-05) : RXD-G3
(E30-5120-08) : RXD-G4
(E30-5156-08) : RXD-G5

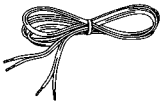

AM loop antenna (1)
(T90-0820-05)

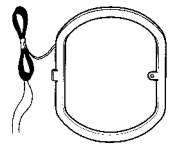

Loop antenna stand (1)
(J19-3645-05)

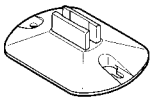

Remote control unit (1)
(A70-1053-05) : RXD-G3/G31
(A70-1054-05) : RXD-G4 : T,E
(A70-1063-05) : RXD-G4 : K,P,Y,M,C,X/G51
(A70-1055-05) : RXD-G5 : K,P,Y,M,C,X
(A70-1056-05) : RXD-G5 : T,E

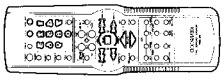

Batteries (R6/AA) (2)

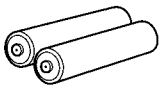

AC plug adaptor (1)
(E03-0115-05)

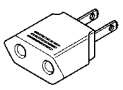

＊1

Insulators (8)
(J02-1155-04)
: RXD-G4/G5 K.P

＊2

＊1 Use to adapt the plug on the power cord to the shape of the wall outlet. (Accessary only for regions where use is necessary.)

＊2 For U.S.A. and Canada only, please attach to the speaker bottom.

System configuration

SYSTEM NAME	MAIN UNIT	SPEAKERS	OVER CARTON			SPACER
UD-305	RXD-G3	LS-G3	KP H60-0424-04	MXY H60-0422-04		
UD-315	RXD-G31	LS-G3		M H60-0450-04	C H60-0451-04	
UD-405	RXD-G4	LS-G4	KP H60-0421-04	MXY H60-0418-04	C H60-0419-04	
UD-505	RXD-G5	LS-G4	KP H60-0415-04	MXY H60-0414-04	C H60-0413-04	KP H12-2294-04 H12-2295-04
UD-515	RXD-G51	LS-G5		M H60-0448-04	C H60-0449-04	

EXTERNAL VIEW / CAUTIONS

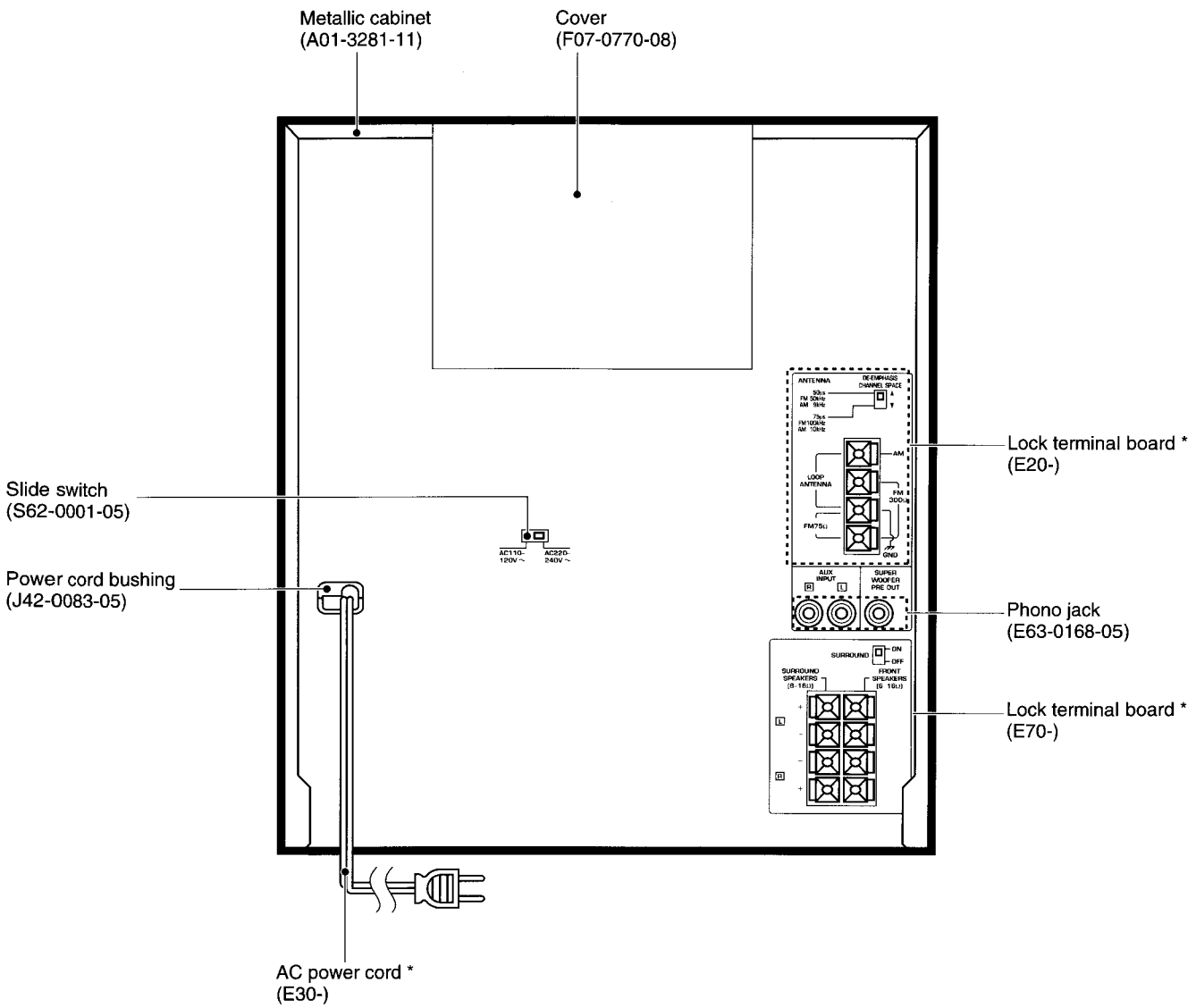

Illustration is RXD-G4.
*** Refer to parts list on page 63.**

Cautions

Beware of condensation

When water vapor comes into contact with the surface of cold material, water drops are produced. If condensation occurs, correct operation may not be possible, or the unit may not function correctly. This is not a malfunction, however, and the unit should be dried. (To do this, turn the POWER switch ON and leave the unit for several hours.)

Be especially careful in the following conditions:

- When the unit is brought from a cold place to a warm place, and there is a large temperature difference.
- When a heater starts operating.
- When the unit is brought from an air-conditioned place to a place of high temperature with high humidity.
- When there is a large difference between the internal temperature of the unit and the ambient temperature, or in conditions where condensation occurs easily.

Note related to transportation and movement (CD player)

Before transporting or moving this unit, carry out the following operations.

1. Turn the power ON but do not load a disc.

●Press the **CD(▶/II)** key to check that no disc is present on the tray.

2. Wait a few seconds and verify that the display shown appears.

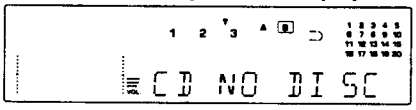

3. Turn the power OFF.

RXD-G3/G4/G5/G31/G51

EXTERNAL VIEW

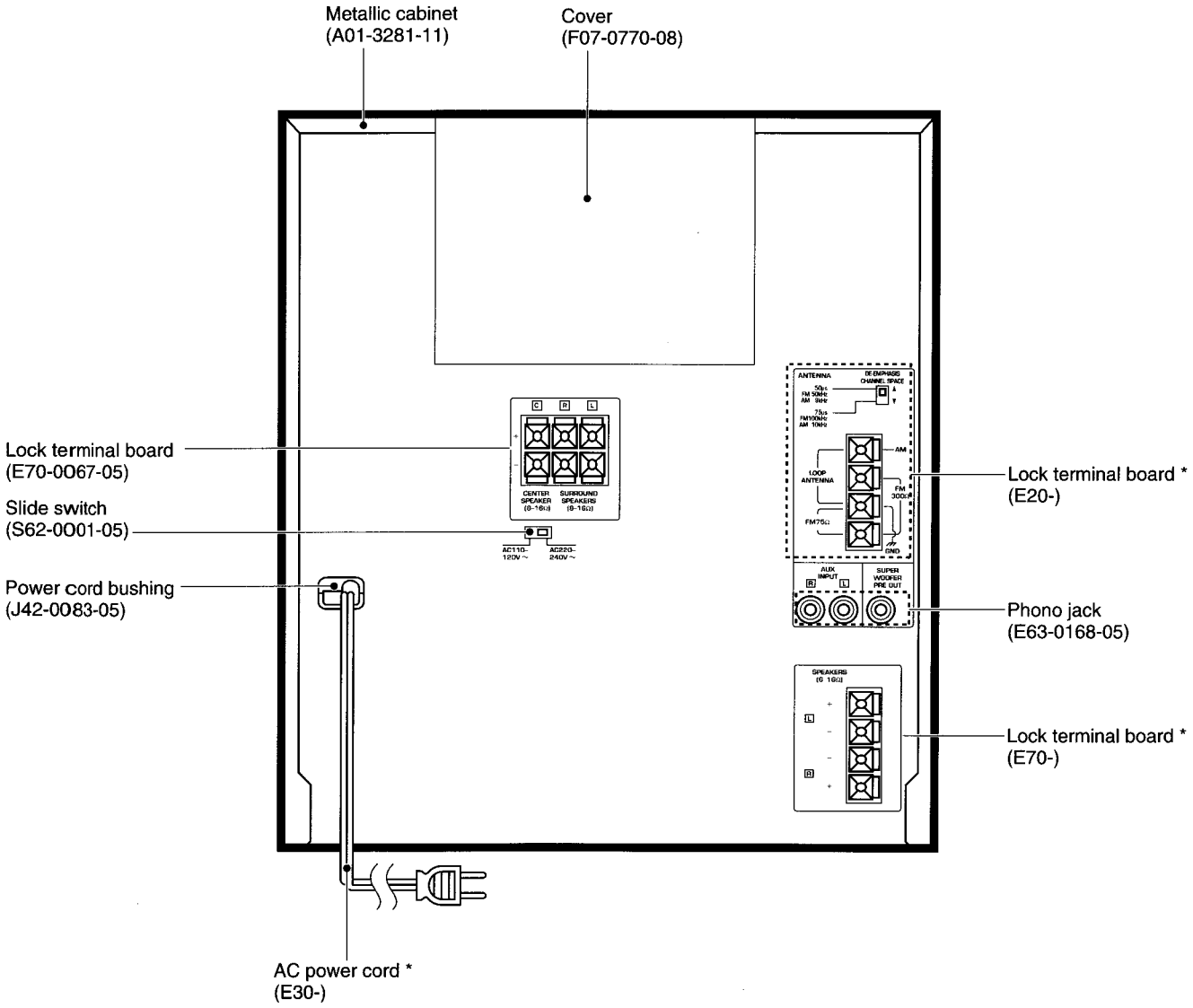

Illustration is RXD-G5.
*** Refer to parts list on page 63.**

CONTROLS

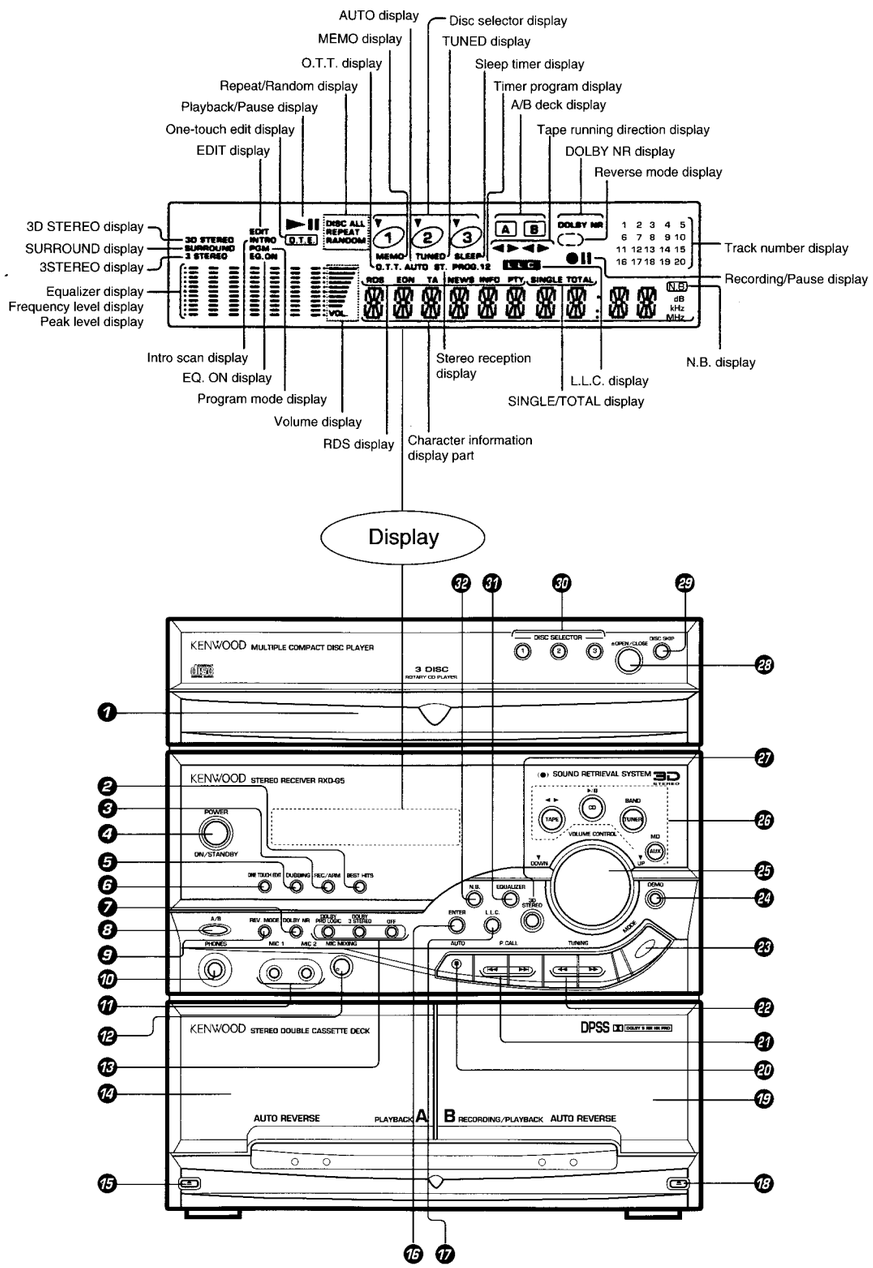

RXD-G3/G4/G5/G31/G51

CONTROLS

❶ **Disc tray**
Three discs can be stored.

☆❷ **BEST HITS key**
Recording of one title of each stored CD in sequence on tape.

❸ **REC/ARM key**
Recording is started. When this switch is pressed during recording, an unrecorded (blank) portion of about 4 sec is produced and then the tape stops.

❹ **POWER key**
Power ON/OFF switching is executed.

❺ **DUBBING key**
The contents of the tape of the A deck are copied to the tape of the B deck.

❻ **ONE TOUCH EDIT key**
When this key is pressed during CD playback, only the title being played at that time will be recorded on tape. When this key is pressed during stop, the CD selected at that time will be recorded on tape from the first title onward.

❼ **DOLBY NR key**
Dolby noise reduction ON/OFF switching is executed.

❽ **A/B key**
The deck to be operated is selected. At the time of power OFF, power save ON/OFF is switched.

❾ **REV. MODE key**
The reverse mode of the deck (both sides, repeated, one side) is switched.

❿ **PHONES terminal**
For connection of a headphone (optional).

⓫ **MIC 1, MIC 2 terminal**
For connection of a microphone (optional).

⓬ **MIC MIXING knob**
At the time of mic mixing, the balance between the voice signal from the microphone and the playback signal is adjusted.

☆⓭ **Keys related to DOLBY SURROUND**
DOLBY PRO LOGIC key
DOLBY PRO LOGIC is selected.
DOLBY 3 STEREO key
DOLBY 3 STEREO is selected.
OFF key
DOLBY PRO LOGIC or DOLBY 3 STEREO is cancelled.

⓮ **A deck cassette holder**

⓯ **A deck eject (⏏) key**
This is used to open the cassette holder at the time of cassette holder removal and insertion.

⓰ **ENTER key**
Used for time setting, timer setting, etc.

⓱ **L.L.C. (Low Level Control) key**
The level for quiet listening can be set in advance, and one-touch switching is possible.

⓲ **B deck eject (⏏) key**

⓳ **B deck cassette holder**

⓴ **AUTO (■) key**
For CD, TAPE: Used as the **STOP** key.
For TUNER: Used as **AUTO** key for tuning mode switching.
At the time of power OFF: Used for time setting.

㉑ **P.CALL (|◀◀ ▶▶|) key**
For CD: Used as **SKIP** key.
For TAPE: Used for skip title selection.
For TUNER: Used as the **P.CALL** key for selection of preset stations.

㉒ **TUNING (◀◀ ▶▶) key**
For CD, TAPE: Used as fast forward and rapid reverse key.
For TUNER: Used as **TUNING** key to tune in to stations.

㉓ **MODE key**
This key switches the function of the **VOLUME CONTROL** knob. The items which can be selected differ according to the status at that time.

㉔ **DEMO key**
Demonstration ON/OFF is switched.

㉕ **VOLUME CONTROL knob**
Normally this is used for volume adjustment. Depending on the purpose, the function can be switched with the **MODE** key.

㉖ **Input selector keys**
The input source is selected. When a key other than MD (AUX) is pressed while the power is OFF, the power is switched on automatically. When TAPE or CD has been selected and a tape or a disc has been set, playback will start automatically. When the ◀▶ (**TAPE**) key is pressed during tape playback, the tape running direction is reversed.

☆㉗ **3D STEREO key**
3D STEREO ON/OFF is switched.

㉘ **OPEN/CLOSE (⏏) key**
The disc tray is opened and closed.

㉙ **DISC SKIP key**
The disc for playback (or recording) is selected. This is also used for insertion of a CD to the inside of the disc tray.

㉚ **DISC SELECTOR key**
The disc for playback (or recording) is selected.

㉛ **EQUALIZER key**
The equalizer effect is switched ON/OFF and the type of equalizer effect is selected.

㉜ **N.B. key**
The low sounds are compensated at the time of listening at low volumes.

NOTE

MODEL \ Key-No.	②	㉗	⑬
RXD-G3	BEST HITS	ENHANCE	X
RXD-G4	BEST HITS	3D STEREO	X
RXD-G5	BEST HITS	3D STEREO	O
RXD-G31	DIGITAL ECHO	ENHANCE	X
RXD-G51	DIGITAL ECHO	3D STEREO	X

CONTROLS

❶ **Disc tray**
Three discs can be stored.

☆❷ **BEST HITS key**
Recording of one title of each stored CD in sequence on tape.

❸ **REC/ARM key**
Recording is started. When this switch is pressed during recording, an unrecorded (blank) portion of about 4 sec is produced and then the tape stops.

❹ **POWER key**
Power ON/OFF switching is executed.

❺ **DUBBING key**
The contents of the tape of the A deck are copied to the tape of the B deck.

❻ **ONE TOUCH EDIT key**
When this key is pressed during CD playback, only the title being played at that time will be recorded on tape. When this key is pressed during stop, the CD selected at that time will be recorded on tape from the first title onward.

❼ **DOLBY NR key**
Dolby noise reduction ON/OFF switching is executed.

❽ **A/B key**
The deck to be operated is selected. At the time of power OFF, power save ON/OFF is switched.

❾ **REV. MODE key**
The reverse mode of the deck (both sides, repeated, one side) is switched.

❿ **PHONES terminal**
For connection of a headphone (optional).

⓫ **MIC 1, MIC 2 terminal**
For connection of a microphone (optional).

⓬ **MIC MIXING knob**
At the time of mic mixing, the balance between the voice signal from the microphone and the playback signal is adjusted.

☆⓭ **Keys related to DOLBY SURROUND**
DOLBY PRO LOGIC key
DOLBY PRO LOGIC is selected.
DOLBY 3 STEREO key
DOLBY 3 STEREO is selected.
OFF key
DOLBY PRO LOGIC or DOLBY 3 STEREO is cancelled.

⓮ **A deck cassette holder**

⓯ **A deck eject (⏏) key**
This is used to open the cassette holder at the time of cassette holder removal and insertion.

⓰ **ENTER key**
Used for time setting, timer setting, etc.

⓱ **L.L.C. (Low Level Control) key**
The level for quiet listening can be set in advance, and one-touch switching is possible.

⓲ **B deck eject (⏏) key**

⓳ **B deck cassette holder**

⓴ **AUTO (■) key**

For CD, TAPE:	Used as the **STOP** key.
For TUNER:	Used as **AUTO** key for tuning mode switching.
At the time of power OFF:	Used for time setting.

㉑ **P.CALL (⏮ ⏭) key**

For CD:	Used as **SKIP** key.
For TAPE:	Used for skip title selection.
For TUNER:	Used as the **P.CALL** key for selection of preset stations.

㉒ **TUNING (◀◀ ▶▶) key**

For CD, TAPE:	Used as fast forward and rapid reverse key.
For TUNER:	Used as **TUNING** key to tune in to stations.

㉓ **MODE key**
This key switches the function of the **VOLUME CONTROL** knob. The items which can be selected differ according to the status at that time.

㉔ **DEMO key**
Demonstration ON/OFF is switched.

㉕ **VOLUME CONTROL knob**
Normally this is used for volume adjustment. Depending on the purpose, the function can be switched with the **MODE** key.

㉖ **Input selector keys**
The input source is selected. When a key other than MD (AUX) is pressed while the power is OFF, the power is switched on automatically. When TAPE or CD has been selected and a tape or a disc has been set, playback will start automatically. When the ◀▶ **(TAPE)** key is pressed during tape playback, the tape running direction is reversed.

☆㉗ **3D STEREO key**
3D STEREO ON/OFF is switched.

㉘ **OPEN/CLOSE (⏏) key**
The disc tray is opened and closed.

㉙ **DISC SKIP key**
The disc for playback (or recording) is selected. This is also used for insertion of a CD to the inside of the disc tray.

㉚ **DISC SELECTOR key**
The disc for playback (or recording) is selected.

㉛ **EQUALIZER key**
The equalizer effect is switched ON/OFF and the type of equalizer effect is selected.

㉜ **N.B. key**
The low sounds are compensated at the time of listening at low volumes.

NOTE

MODEL \ Key-No.	②	㉗	⑬
RXD-G3	BEST HITS	ENHANCE	X
RXD-G4	BEST HITS	3D STEREO	X
RXD-G5	BEST HITS	3D STEREO	O
RXD-G31	DIGITAL ECHO	ENHANCE	X
RXD-G51	DIGITAL ECHO	3D STEREO	X

REMOTE CONTROL UNIT

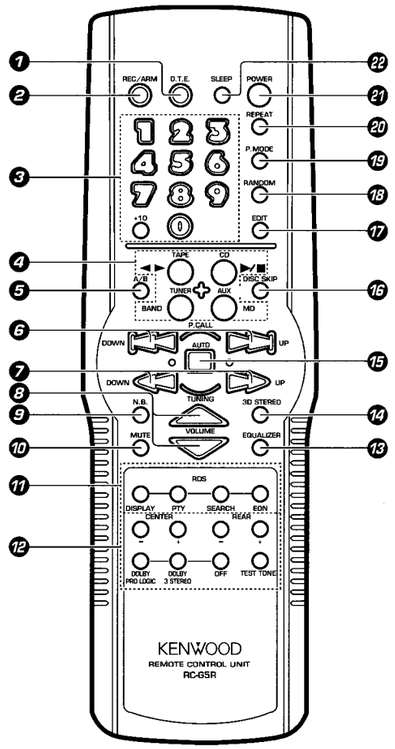

The keys on the remote control unit with the same name as on the main unit have the same function as the keys on the main unit

MODEL \ Key-No.		⑪	⑫	⑭
RXD-G3,G31	RC-G3	X	X	ENHANCE
RXD-G4(T,E)	RC-G4R	O	X	3D STEREO
RXD-G4 (K,P,Y,M,C,X) RXD-G51	RC-G4	X	X	3D STEREO
RXD-G5(T,E)	RC-G5R	O	O	3D STEREO
RXD-G5 (K,P,Y,M,C,X)	RC-G5	X	O	3D STEREO

❶ **O.T.E. key**
This key has the same function as the **ONE TOUCH EDIT** key on the main unit.

❷ **REC/ARM key**

❸ **Numeric keys**
Used as number keys when the input is switched to CD.

❹ **Input selector keys**

❺ **A/B key**

❻ **P.CALL (Preset Call) (⏮ ⏭) keys**

❼ **TUNING (◀◀ ▶▶) keys**

❽ **VOLUME keys**
This has the same function as the **VOLUME CONTROL** knob on the main unit. However, the AI VOLUME function does not operate.

❾ **N.B. key**

❿ **MUTE key**
This is used to mute the sound temporarily.

⓫ **Keys related to RDS**
DISPLAY key
The display contents are switched during reception of RDS broadcasts.
PTY (Program Type) key
This is used to specify the program type when searching for a station.
SEARCH key
Used to search for a station when the program type has been specified.
EON key
Used for automatic reception of transmissions of a certain content.

⓬ **Keys related to DOLBY SURROUND**
CENTER (+ –) key
For adjustment of the center level.
REAR (+ –) key
For adjustment of the rear level.
DOLBY PRO LOGIC key
DOLBY 3 STEREO key
OFF key
TEST TONE key
Test tone output is switched ON/OFF at the time of center level and rear level adjustment.

⓭ **EQUALIZER key**

⓮ **3D STEREO key**

⓯ **AUTO (■) key**

⓰ **DISC SKIP key**

⓱ **EDIT key**
Used for CD edit recording (time edit recording).

⓲ **RANDOM key**
For CD playback, switching is executed between introduction scanning, random playback, and normal playback.

⓳ **P.MODE key**
Used to program the CD playback sequence.

⓴ **REPEAT key**
Used for repeated playback of a CD.

㉑ **POWER key**

㉒ **SLEEP key**
Use to set the sleep timer.

RXD-G3/G4/G5/G31/G51 RXD-

BLOCK DIAGRAM

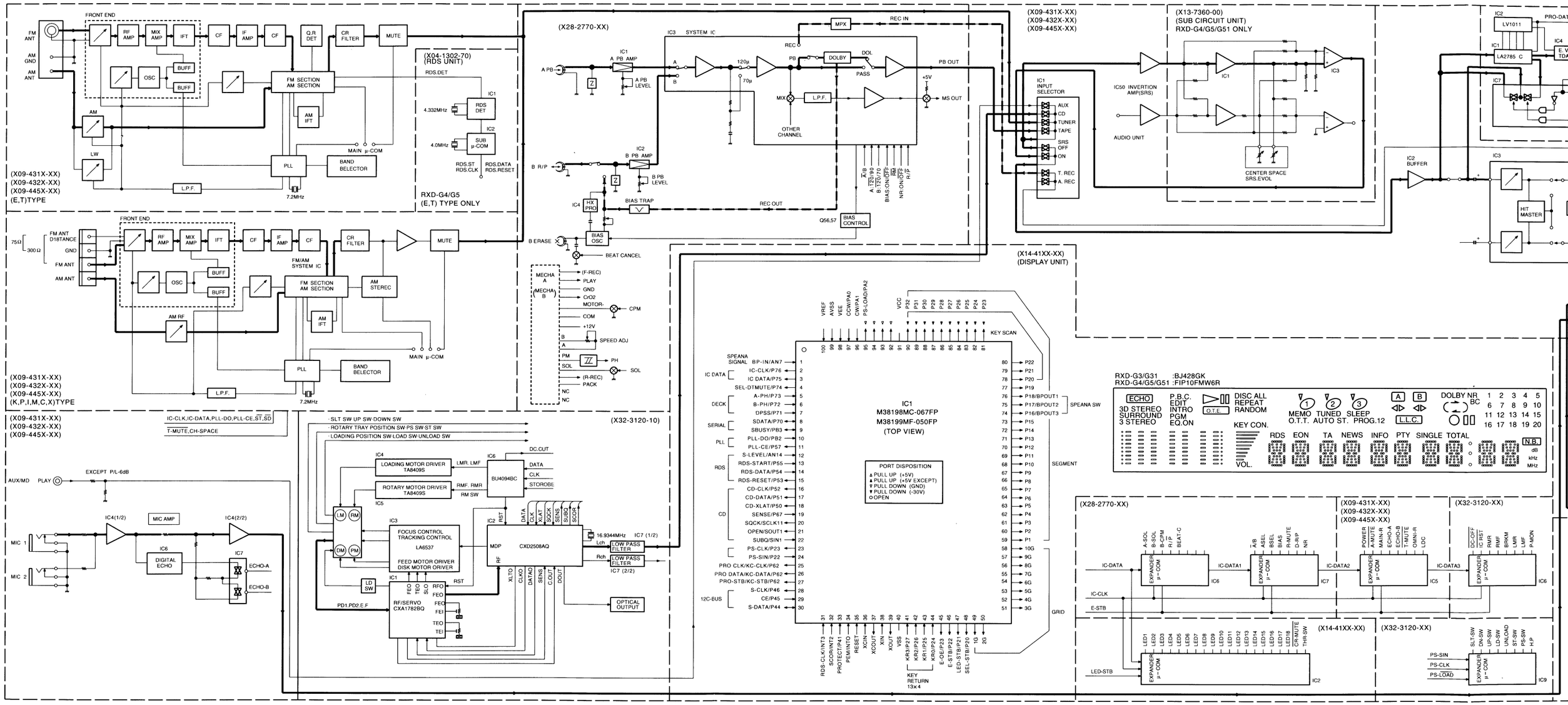

 RXD-G3/G4/G5/G31/G51

BLOCK DIAGRAM

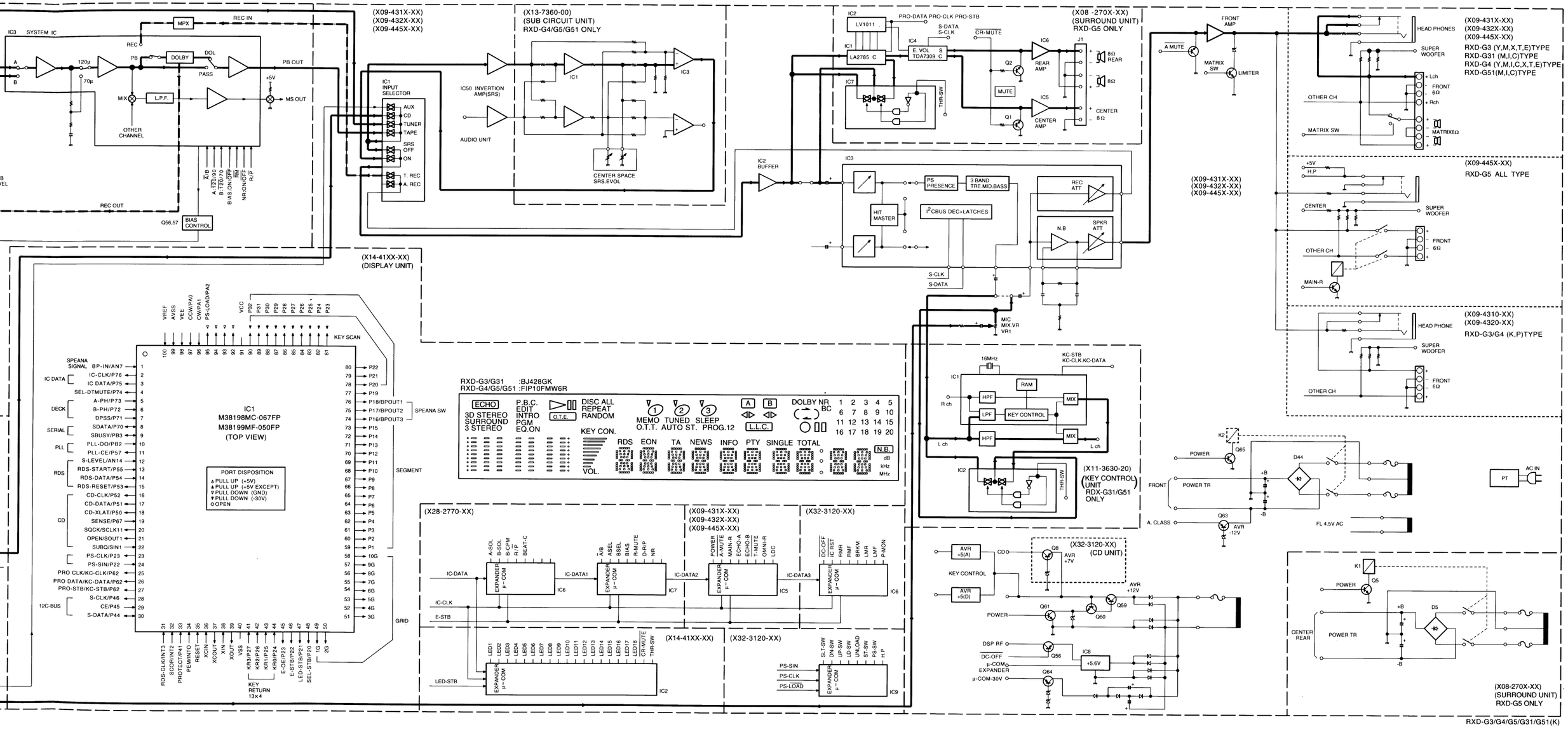

RXD-G3/G4/G5/G31/G51(K)

CIRCUIT DESCRIPTION

1. MAIN μ-COM (M38198MC-069FP/M38198MF-051FP) (X14 : IC 1)

1-1. Function

		RXD-G3		RXD-G4		RXD-G5	RXD-G31	RXD-G51
		K,P	Y,M,X,T,E	K,P	Y,M,I,C,X,T,E	K,P,Y,M,I,C,X,T,E	M,I,C	M,I,C
	CD Player	3 DISC						
TUNER	FM Stereo	○						
	LW	T only						
AMP	POWER	50W+50W		70W+70W			50W+50W	70W+70W
	Surround matrix terminal		○		○		○	○
	L.L.C	○						
	SRS(3D stereo)			○				○
	Digital echo						○	
	Best hit				○			
	DOLBY PROLOGIC					○		
	DOLBY 3 stereo					○		
DECK	W-DECK MECHA	FULL LOGIC REVERSE						
	HX PRO			○				○
	Normal speed	○						
	B DECK recording	○						

1-2. Microproccesor periphery block diagram

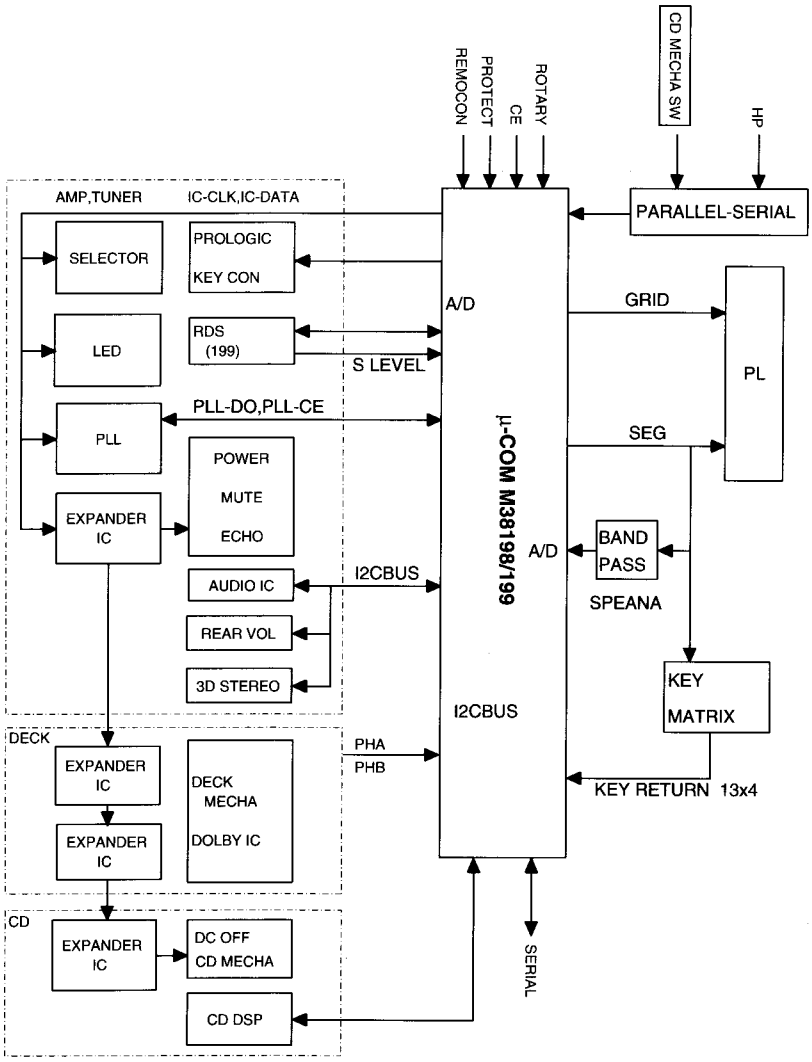

CIRCUIT DESCRIPTION

1-3. Expander port connection

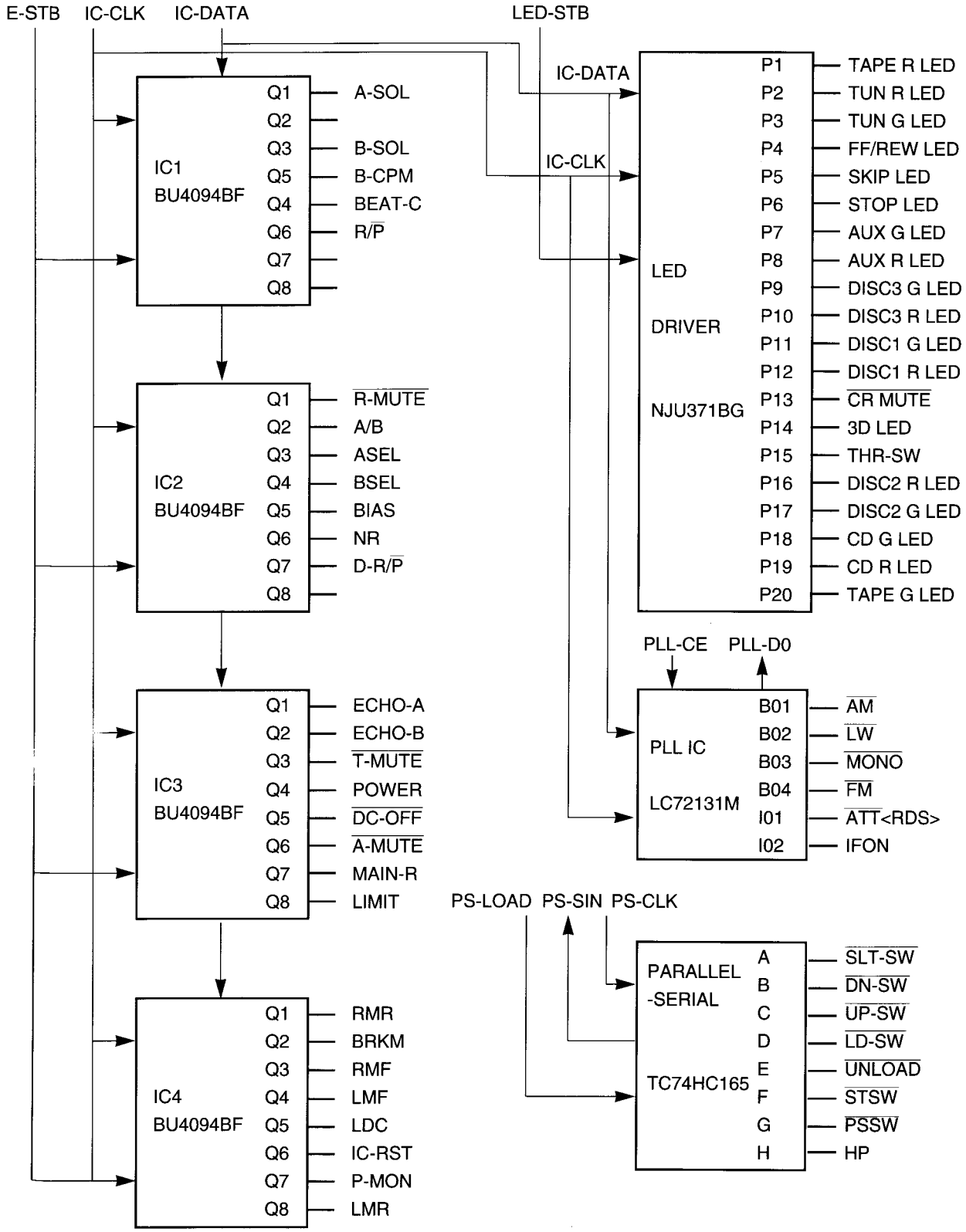

CIRCUIT DESCRIPTION

1-4. Pin connection

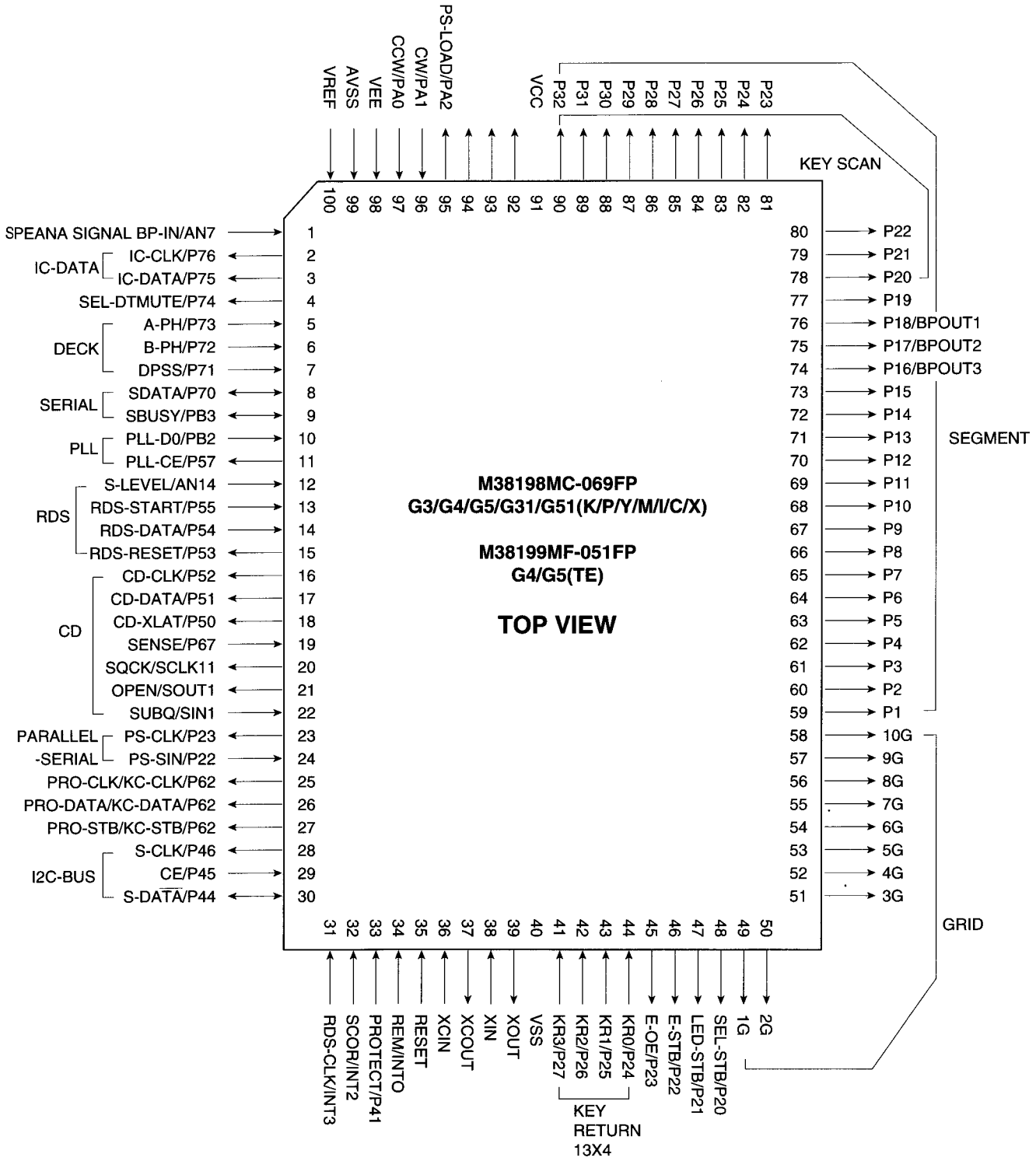

CIRCUIT DESCRIPTION

1-5. Pin description

Pin No.	I/O	Name	Description
1	I	BP-IN	Speana input(A/D convertor input)
2	O	I C-CLK	IC-CLOCK(BU4094BF · NJU7313AM,NJU3718G · LC7218,LC83025E)
3	O	IC-DATA	Selector/LED driver/Expander IC data
4	O	SEL-DTMUTE	Selector IC data mute(NJU7313AM)
5	I	A-PH	A photo sensor input
6	I	B-PH	B photo sensor input
7	I	DPSS	DPSS detection
8	I/O	SDATA	Serial communication data
9	I/O	SBUSY	Serial communication busy
10	I	PLL-DO	PLL(LC7218)data input
11	O	PLL-CE	PLL(LC7218)chip enable
12	I	S-LEVEL	RDS signal level
13	I	RDS-START	RDS IC start
14	I	RDS-DATA	RDS IC data
15	O	RDS-RESET	RDS IC control reset
16	O	CD-XLAT	CD latch output (CXA1782BQ,CXD2508Q)
17	O	CD-DATA	CD IC DATA(CXA1782BQ · CXD2508Q)
18	O	CD-CLK	CD IC CLK(CXA1782BQ · CXD2508Q)
19	I	SENSE	CD sense input(CXA1782BQ,CXD2508Q)
20	O	SQCK	Sub cord clock(CXD2508Q)
21	O	(OPEN)	Unused
22	I	SUBQ	Sub code data(CX2508Q)
23	O	PS-CLK	Parallel serial IC clock
24	I	PS-SIN	Parallel serial IC data
25	O	PRO-CLK	Dolby PROLOGIC IC(LA2785,LV1010N)clock
26	O	PRO-DT	Dolby PROLOGIC IC(LA2785,LV1010N) data
27	O	PRO-STB	Dolby PROLOGIC IC(LA2785,LV1010N)strobe
28	O	S-CLK	Surround IC clock(TDA7315,TDA7345)
29	I	$\overline{\text{CE}}$	Power failure input
30	I/O	S-DATA	Surround IC data(TDA7315 · TDA7345)
31	I	RDS-CLK	RDS IC clock
32	I	SCOR	Sub code(CXD2508Q)
33	I	PROTECT	Protection input
34	I	REM	Remote control input
35		$\overline{\text{RESET}}$	Reset
36	I	Xcin	Timer clock input(32.768KHz)
37	O	Xcout	
38	I	Xin	Main clock input(8.38MHz)
39	O	Xout	
40		Vss	(GND)
41 ~ 44	I	KR3 ~ KR0	Key return 3 ~ 0
45	O	E-OE	Expander IC(BU4094BC) enable control
46	O	E-STB	Expander IC(BU4094BC) strobe control
47	O	LED-STB	LED IC strobe
48	O	SEL-STB	Selector IC strobe

CIRCUIT DESCRIPTION

Pin No.	I/O	Name	Description
49～58	O	1G～10G	FL grid output 1G～10G
59～73	O	P1～P15	FL segment output P1～P15
74～76	O	P16/BPOOT3～P18/BPOOT1	FL segment output/band pass filter control 3～1
77	O	P19	FL segment output
78～90	O	P20/KEY13～P32/KEY1	FL segment/Key output/Key scan output
91		Vcc	(Micom power)
92～94	O		Unused
95	O	PS-LOAD	Parallel serial IC load H : SHIFT L : LOAD
96	I	CW	Rotary encoder input B
97	I	CW	Rotary encoder input A
98	I	Vee	Full down power
99	I	AVss	A/D GND
100	I	Vref	A/D reference voltage

1-6. Key scan line input

Name	Description
SLT	CD limit SW
DNSW	CD down SW
UPSW	CD up SW
LDSW	CD load SW
$\overline{\text{UNLOAD}}$	CD unload SW
A-PACK	A deck tape detection
B-PACK	B deck tape detection
A-CrO2	A deck Normal/CrO2 detection
B-CrO2	B deck Normal/CrO2 detection
A-PLAY	A deck PLAY-SW
B-PLAY	B deck PLAY-SW
FREC	Forward REC detection
RREC	Reverse REC detection
TEST	PCB TEST mode
DSW3	Decided model(D)
DSW4	
DSW5	
DSW0	Decided tuner destination(D)
DSW1	
DSW2	
$\overline{\text{ST}}$	PLL stereo input
$\overline{\text{SD}}$	Station detector input

RXD-G3/G4/G5/G31/G51

CIRCUIT DESCRIPTION

RXD-G3/G4/G5/G31/G51 KEY MATRIX (UNIT)

	KR0	KR1	KR2	KR3
SEG 1	DISC 1	DISC 2	DISC 3	TAPE
SEG 2	OPEN/CLOSE	DISC SKIP	BAND	CD
SEG 8	MD	DEMO	MODE/OTT /ENHANCE	►►
SEG 9	◄◄	►►I	I◄◄	■
SEG 10	KEY ①	E Q	N B	LLC
SEG 11	KEY ②	KEY ③	ENTER	KEY ④
SEG 12	DOLBY N R	REV MODE	A/B	POWER
SEG 13	KEY ⑤	REC/ARM	DUBBING	OTE

	KEY ①	KEY ②	KEY ③	KEY ④	KEY ⑤
RXD-G3	ENHANCE	– – –	– – –	– – –	BEST HITS
RXD-G31 (J.M)	ENHANCE	– – –	– – –	– – –	DIGITAL ECHO
RXD-G4 (K.E)	3D STEREO	– – –	– – –	– – –	BEST HITS
RXD-G5	3D STEREO	DOLBY 3 STEREO	DOLBY PRO LOGIC	OFF	BEST HITS
RXD-G51 (J.M)	3D STEREO	– – –	– – –	– – –	DIGITAL ECHO

TUNER

	KR0	KR1	KR2	KR3
SEG5	SD	ST		

DECK

	KR0	KR1	KR2	KR3
SEG6	A PACK	B PACK	A PLAY	A CrO2
SEG7	R REC	B CrO2	B PLAY	F REC

DIODE SW

	KR0	KR1	KR2	KR3
SEG3	TEST DECK PCB	DSW2	DSW1	DSW0
SEG4	DSW5	DSW4	DSW3	TEST RDS

DIODE SWITCH TABLE

(1) TUNER DESTINATION SELECT

	DSW2	DSW1	DSW0
K1 (K, P, R)	L	L	L
K2 (K, P, R)	L	L	H
J (J)	L	H	L
E1 (E, G, X)	L	H	H
E2 (T)	H	L	L
E1 (RDS)	H	L	H
E2 (RDS)	H	H	L
M (M,Y)	L	CH SP	H

M TYPE : SELECT DESTINATION BY CH SP (CHANNEL SPACE SW)

L : K2 H : E1

(2) MODEL SELECT

	DSW5	DSW4	DSW3
RXD-G3	L	L	L
RXD-G31	L	L	H
RXD-G4	L	H	L
RXD-G5	L	H	H
RXD-G51	H	L	H

1-7. Initialization (Reset)

Insert the AC plug into the outlet while holding down the ENTER key of main unit.

Initial stage

	State	
SYSTEM	POWER	OFF
CLOCK PROG.	CLOCK	STOP(AM12:00)
	PROG. Operation MODE	OFF
	PROG.1 : ON=AM12:00	OFF=AM12:00
	MOD=PLAY	SOC=TUNER(1ch)
	PROG.2 : ON=AM12:00	OFF=AM12:00
	MOD=PLAY	SOC=TUNER(1ch)
AMP	VOLUME	7SEG=7
	SELECTOR	TUNER
	EQ.	OFF
	PRESENCE	OFF
	3D STEREO	OFF
	N. B.	OFF
	MUTING	OFF
	PROLOGIC	OFF

	State	
TUNER	BAND	FM
	Each last BAND	
	FM : P.ch= - - ch FREQ=min(76.0 or 87.5 MHz)	
	AM(MW) : P.ch= - - ch FREQ=min(530 or 531 kHZ)	
	LW : P.ch= - - ch FREQ=min(153kHz)	
	P.CH Memory 1 ch~20ch : Test frequency	
		(Refer to Test Frequency)
	Tuning MODE	AUTO (AUTO STEREO)
TAPE	A/B Selector	B
	A Deck Head position	For FWD
	B Deck Head position	For FWD
	DOLBY NR	OFF
	REV	REVERSE
CD	DISC Selector	DISC 1
	REPEAT	OFF

2 TEST MODE

2-1. Cassette Deck TEST MODE

TEST Mode	Operation	Description
Input method	While depressing the TAPE key, plug the power cord in to an AC power outlet.	Entered TEST mode.
Cancel method	Turn off the power.	Cancelled TEST mode.
4 sec. REC	REC	Insert the cassette tape of B deck, select AUX, the deck start REC position. On the REC mute off, started 4 sec REC. After return REC Starting position,select TAPE, started PLAY position.
Direct PLAY	FWD key RVS key(Insert the tape in the A or B deck)	FWD key : Moved FWD PLAY to select A or B RVS key : Moved REV PLAY to select A or B.
Select deck (A/B)	A or B	Select deck A or B without cassette tape.

2-2. DETECT HALF SW (ON TEST MODE)

SW	DISPLAY
A CrO2 detect half sw	A
B CrO2 detect half sw	A
B FWD REC inhibit detect half sw	B
B RVS REC inhibit detect half sw	B

2-3. AMP GE TUNER TEST MODE

1. How to turn it ON
   If you turn ON the power while pressing the AUX key or the TUNER key, it will go into the AMP/GE/TUNER test mode.
2. Operation immediately after the start-up of the test mode
   The test mode gets started while the power is turned ON. If the AUX key is pressed, the selector will be turned to "AUX." If the TUNER key is pressed, it will be turned to "TUNER. All the FLs will light up. The red and green lamps of the two-color LEDS will light up by turns at 500 msec. interval. All the single-color LEDS will light up. The indication with all the LEDs' lighting up can be released by operating the key on the remote control or on the main body Then, it will be returned to the ordinary "AUX" display then to the ordinary display.
3. Operation in the test mode

(1) MUTE control is not activated when the mode is switched.
(2) The test mode will not be terminated if it is shifted to other positions than "AUX.
(3) The test mode will be terminated by plugging it off the power source or by initializing it, when all the settings will be initialized.
(4) During the test mode, it can be operated in a special manner that is different from an ordinary operation by using the keys on the remote control or the main body, specifically as shown in the following table.

Key	Function	Key	Function
POWER	Initialization	3D STEREO	Normal operation
CD	Normal operation	DOLBY PRO/flat	Normal operation
TAPE	Normal operation	DOLBY 3 ST/natural	Normal operation
TUNER	Normal operation	OFF/sharp	Normal operation
MD/AUX	Normal operation	BEST HIT/MIC ECHO	Normal operation
■	Normal operation	MODE/OTT/ENHANCER	Normal operation
⏮	Center level up	DEMO	All light off, normal display
⏭	Center level down		(cyclic)
◀◀	Rear level up	+10(Remocon key)	Selector TUNER+10 key
▶▶	Rear level down	0(Remocon key)	Selector TUNER 0 key
ENTER.	S level display	1(Remocon key)	Selector TUNER 1 key
LLC	S level display cancellation	2(Remocon key)	Selector TUNER 2 key
PRESENCE	Normal operation	3(Remocon key)	Selector TUNER 3 key
N. B.	Normal operation	4(Remocon key)	Selector TUNER 4 key
EQ. ON/OFF	Normal operation	5(Remocon key)	Selector TUNER 5 key
DISC 1	※3D TES1(AUX only)	6(Remocon key)	Selector TUNER 6 key
DISC 2	※3D TES2(AUX only)	7(Remocon key)	Selector TUNER 7 key
DISC 3	※3D TES3(AUX only)	8(Remocon key)	Selector TUNER 8 key
OPEN/CLOSE	※3D TES4(AUX only)	9(Remocon key)	Selector TUNER 9 key
※DISK SKIP	※Equalizer FLAT (OFF)		
A/B(A)	※Encoder MID(CE)		
REV.MOD(Unit)	※Encoder MIN(L)		
DOLBY NR B(Unit)	Equalizer MIN		
DUBBING (Unit)	Equalizer MAX		
REC/ARM(REC)	HIT MASTER ON		
ONE TOUCH EDIT	※Encoder MAX(R)		

※ The DISK SKIP key is used for "Equalizer FLAT" and "OFF function" (to turn OFF "PRESENCE" and "HIT MASTER").
※ The remote control/main body keys that are not listed above will work as usual.
※ Setting of 3D. (AUX mode only)
※ Setting of S level display and S level cancellation. (TUNER mode only)

ADJUSTMENT

CD section (X32-312)

No.	ITEM	INPUT SETTING	OUTPUT SETTING	PLAYER SETTING	ALIGNMENT POINT	ALIGN FOR	FIG.
1	LASER POWER	-	Set the senor section of the optical power meter on the pickup lens.	Press CD key and turn the power on to enter the test mode.Press the"DISC3"key to check that the display is "03".	-	On the power from.0.05 to 0.15mw. when the diffraction grating is correctly aligned with the RF level of 0.8Vp-p or more	(a)
2	TRACKING ERROR BALANCE	Test disc Type 4	Connect an oscilloscope as follows. CH1 : RF (CN2-1) CH2 : TE (CN2-6)	Load disc and set to test mode.Confirm the display is"03".	TE BALANCE VR1	Symmetry between upper and lower or DC=0±25mV	
3	FOCUS ERROR BALANCE	Test disc Type 4	Connect an oscilloscope as follows. CH1 : RF(CN2-1) CH2 : TE(CN2-6)	Press the PLAY key. Confirm that the display is"05"	FE BALANCE VR2	Optimum eye pattern	
4	TRACKING GAIN	Test disc Type 4 Apply signal of 1.0kHz, 50mVrms to CN2 pin 5-6.	Connect a LPF to CN2 pin 5-6 to which connect an oscilloscope or AC voltmeters.	Press the PLAY key. Confirm that the displays"05"	TRACKING GAIN VR3	Two VTVMs should read the same value.	(e)

Note:
Type 4disc :SONY YEDS-18 Test Disc or equivalent.
LPF : Around 47kΩ + 390pF or so.
Step 1 ~ 5 are in Test Mode.

(a) Laser Power

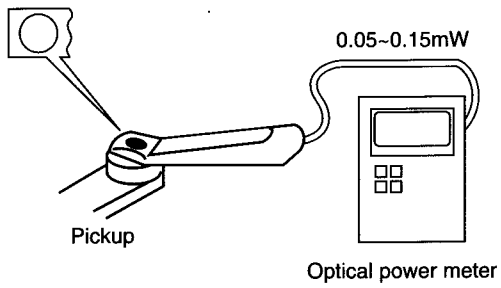

(e) Tracking Gain Adj.

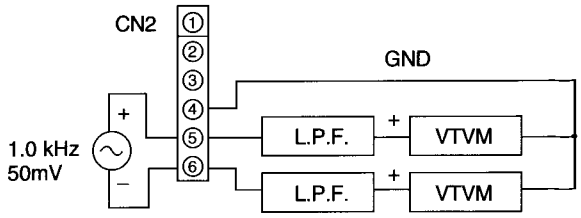

CD test mode input method : While depressing the CD key, plug the power cord into an AC power outlet.

NO.	KEY	OPERATION	TRACK NO. DISPLAY
1	CD	CLAMP DISC3 1. FOCUS SERVO .....ON 2. TRACKING SERVO .....ON 3. FEED SERVO .....ON	05
2	DISC3	1.FOCUS SERVO .....ON 2. TRACKING SERVO .....OFF 3. FEED SERVO .....OFF	03
3	STOP	STOP	01
4	DISC1	PLAY T NO.16 (P NO 2)	16
5	DOWN	STOP D NO2, AND PLAY T NO32 OF D NO1.	32
6	DISC2	CLAMP UP D NO3, AND LOCK FLICKTION ARM	— —

ADJUSTMENT

FIG. (b)

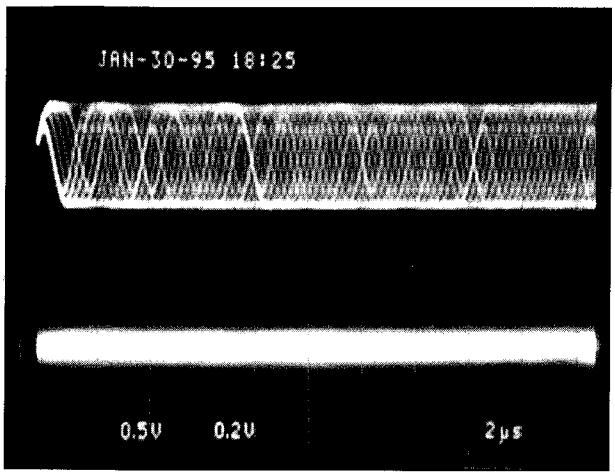

CH1
RF signal

VC

0 (V)

CH2
TE signal

- RF signal and TE signal in test mode (PLAY).

FIG. (c)

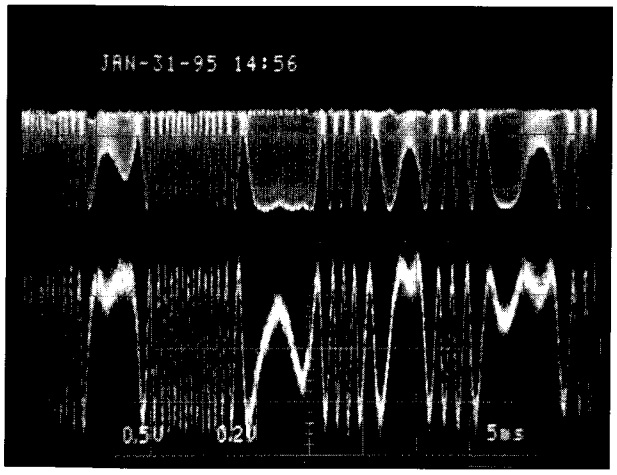

CH1
RF signal

VC

VC

CH2
TE signal

- RF signal and TE signal in test mode (Focusing servo ON / Tracking servo OFF). (Disc Type 4)
- Adjust TE signal so that the waveform is symmetrical in relation to VC. VR 3 (TE BALANCE)

FIG. (d)

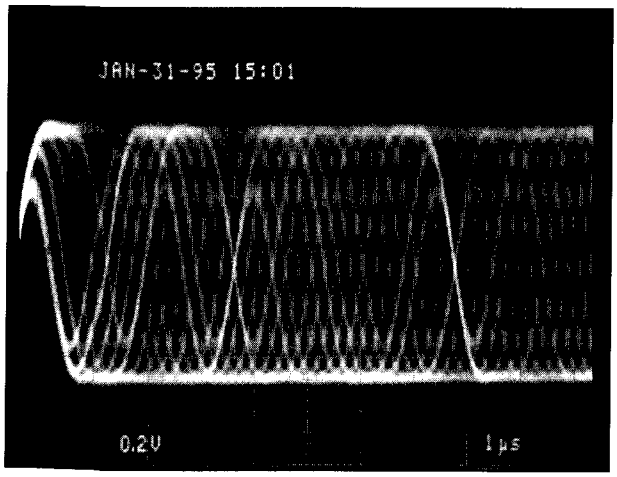

RF signal
: AC coupled

- RF signal in test mode (PLAY).
- Perform the tangential and focusing offset are focused into one point on the display. The crossing points above and below the center shall also be looked clearly.

ADJUSTMENT

Cassette Deck section

No	ITEM	INPUT SETTING	OUTPUT SETTING	DECK SETTING	ALIGNMENT POINT	ALIGN FOR	FIG.
Unless otherwise specified, set the respective switches as follows: 0dBs=0.775V TAPE : NORMAL DOLBY : OFF REC OUT : Lch (X28,CN5 ①pin), Rch (X28,CN5 ④pin) I. Cassette mechanism unit (Adjustment of the REC / PLAY head)							
⟨1⟩	Demagnetization and cleaning	—	—	Power : OFF Demagnetization,cleaning, PLAY	Recording head, erase head,capstan pinch roller	Demagnetize the REC / PLAY head with the head eraser.Clean the REC / PLAY head, erase head,capstan and pinch roller using a cotton swab slightly damped with alcohol.	
⟨2⟩	Azimuth of the REC/PLAY head	TCC–153 MTT–114 10kHz, – 10dB	(B)	PLAY	FWD RVS	Adjust the output to maximum and adjust the azimuth adjustment screw for the Lissajours waveform pattern of the oscilloscope to become close to a 45° straight line.	
II. PC BOARD ADJUSTMENT							
⟨1⟩	TAPE SPEED(NORMAL)	TCC–110 MTT–111 SCC–1727 3kHz	(B)	PLAY	VR9	Adjust the tape speed so that 3kHz is obtained at the center of the tape.	
III. PC BOARD ADJUSTMENT							
⟨1⟩	PLAYBACK LEVEL	MTT– 150 400Hz	(B)	PLAY	A DECK VR 1(L) VR 2 (R) B DECK VR 3 (L) VR4 (R)	Adjust the playback output to -2.0dBs	
		MTT–256, SCC–1727 315Hz				Adjust the playback output to -6.0dBs	
		MTT–256U, TCC–160 315Hz				Adjust the playback output to -3.0dBs	
⟨2⟩	BIAS CURRENT	Adjust the AG for the output of the DECK to become 400Hz –23dBs. 400Hz/12.5kHz	(B)	REC ↕ PLAY	RXD-G3/G31 VR5(L) VR6(R) RXD-G4/G5 /G51 VR7(L) VR8(R)	Record 400Hz and 12.5kHz alternately, and adjust the bias current adjustment potentiometer for the playback levels to become the +3dB.	

RXD-G3/G4/G5/G31/G51

ADJUSTMENT

TUNER section

No.	ITEM	INPUT SETTING	OUTPUT SETTING	TUNER SETTING	ALIGNMENT POINTS	ALIGN FOR	FIG.
FM SECTION		BAND : FM					
1	DISTORTION (STEREO)	(C) 98.0MHz 1kHz,±68.25 kHz dev Pilot : ±7.5kHz dev 60 dBμ(ANT input)	(B)	AUTO 98.0MHz	IFT (W02-)	Minimum distortion.	(f)

(X09-431,432,445)

No.	ITEM	INPUT SETTING	OUTPUT SETTING	TUNER SETTING	ALIGNMENT POINTS	ALIGN FOR	FIG.
FM SECTION		BAND : FM					
1	DISCRIMINATOR	(A) 98.0MHz 1kHz,±75 kHz dev 60 dBμ(ANT input)	Connect a DC voltmeter between TP 1 and TP2. (X09-)	AUTO or MONO 98.0MHz	L306 (X09-)	0V	(f)
2	DISTORTION (STEREO)	(C) 98.0MHz 1kHz,±68.25 kHz dev Pilot : ±7.5kHz dev 60 dBμ (ANT input)	(B)	AUTO 98.0MHz	IFT (W02-)	Minimum distortion.	(f)

Fig.(f)

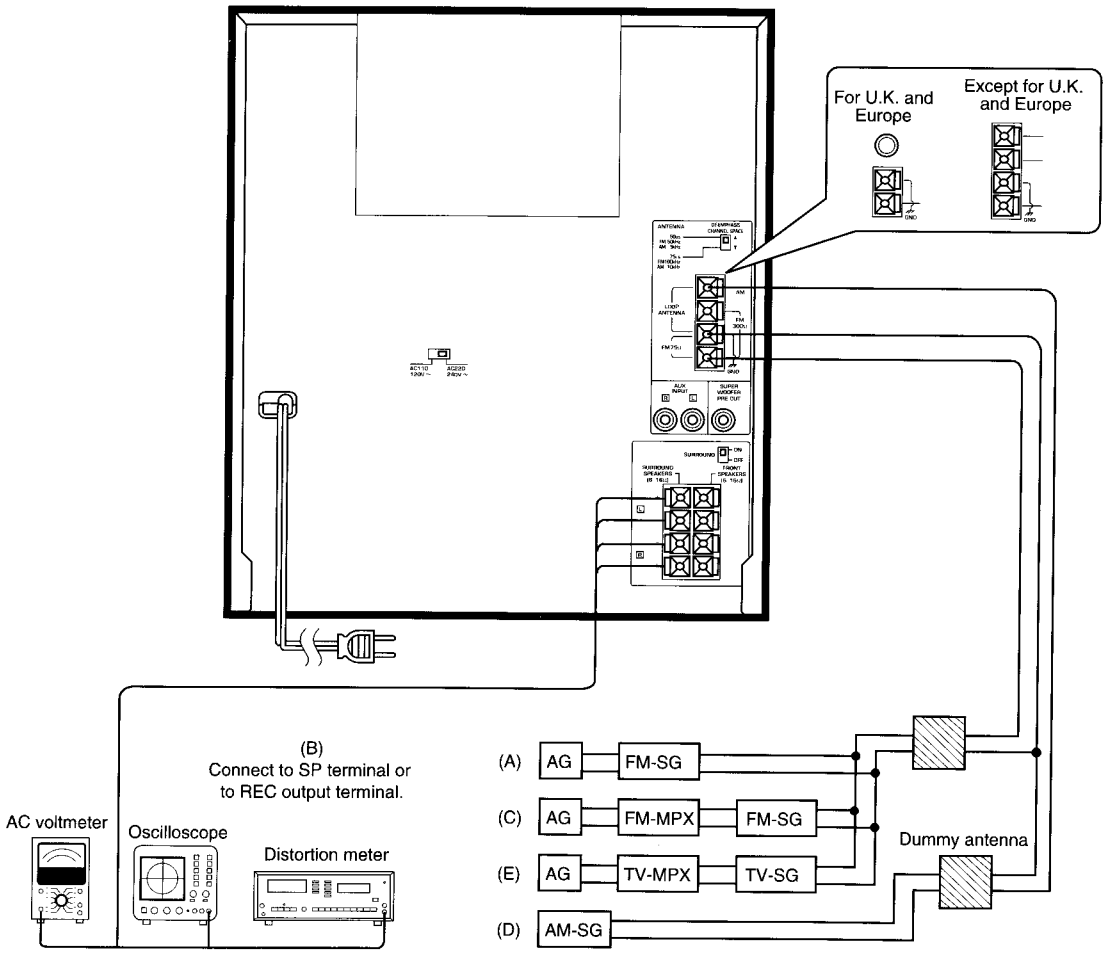

REC output : for X28 L ch, connect CN 5 pin 1;
for X28 R ch, connect CN 5 pin 4.

 RXD-G3/G4/G5/G31/G51

WIRING DIAGRAM

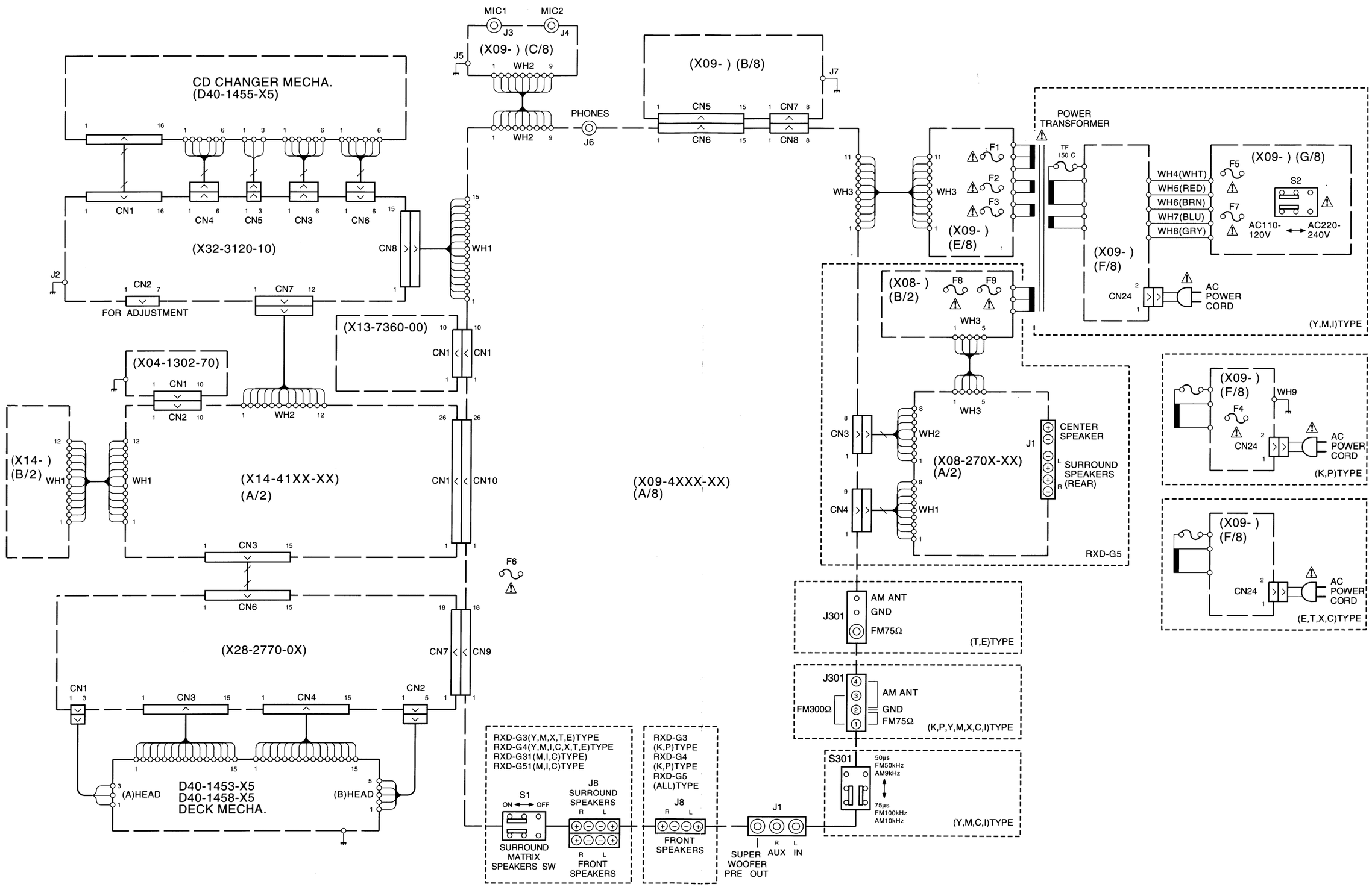

PC BOARD (Component side view)

AUDIO · TUNER UNIT (X09-)

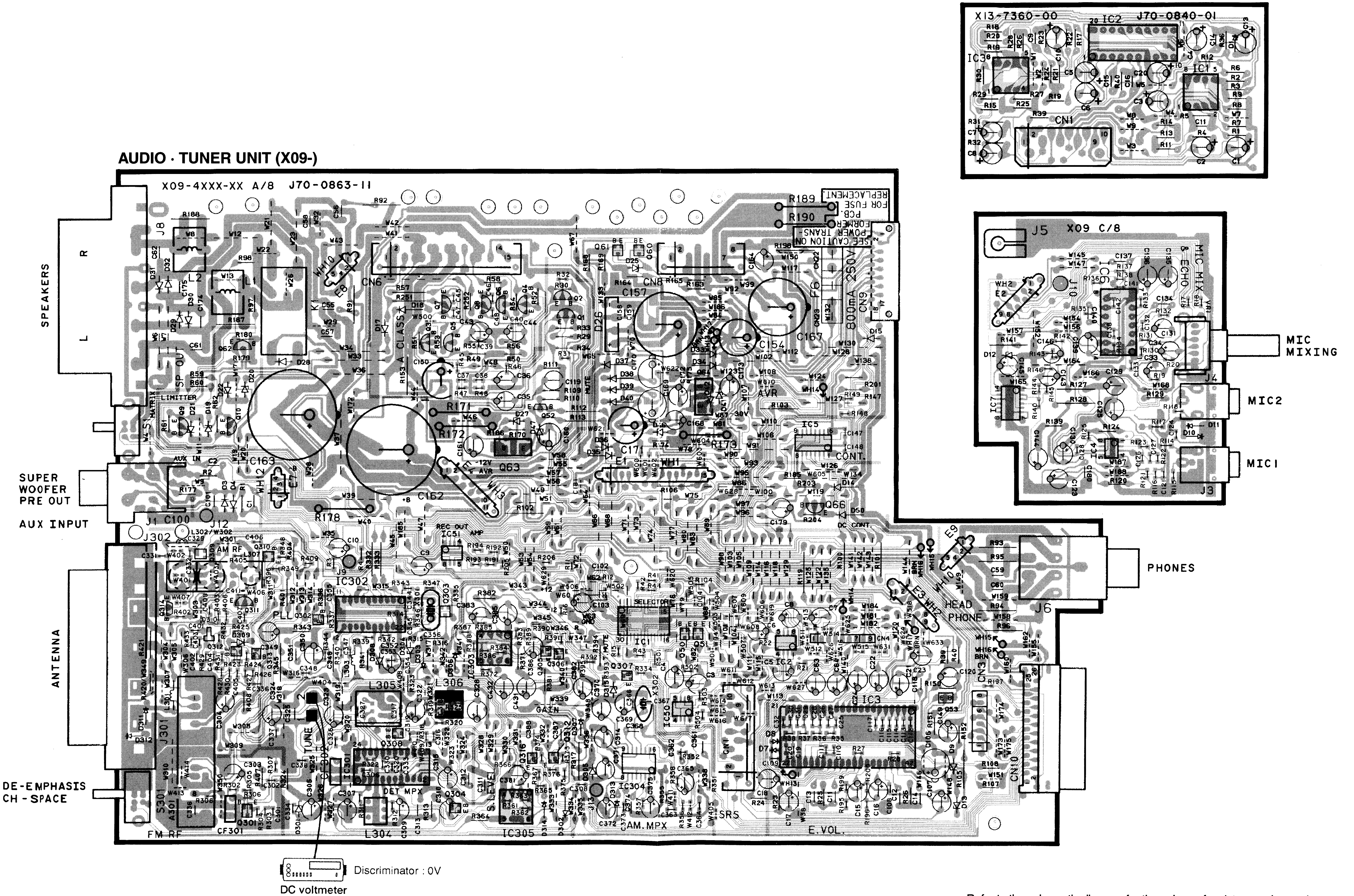

Refer to the schematic diagram for the values of resistors and capacitors.

PC BOARD (Component side view)

CD PLAYER UNIT (X32-)

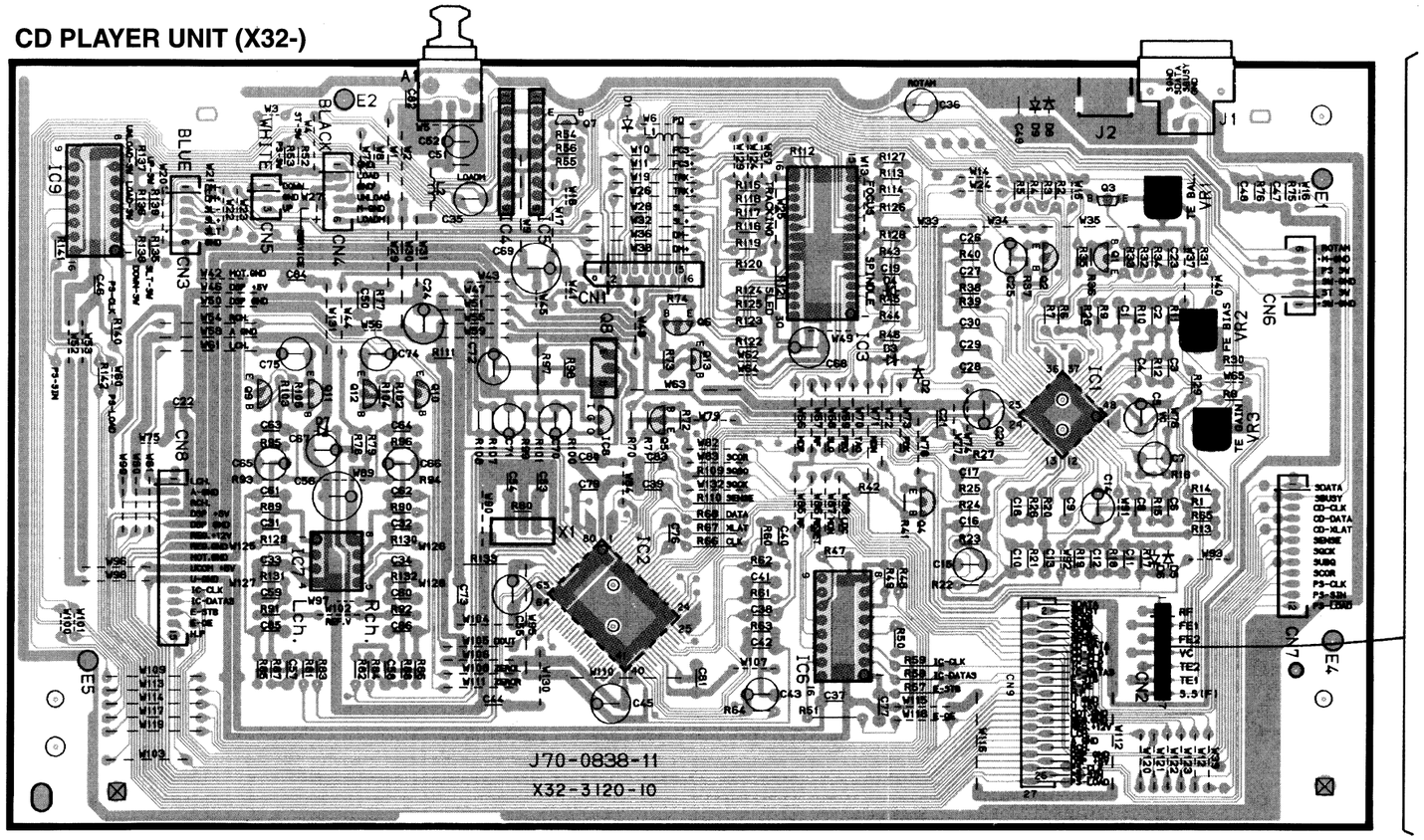

Tracking error balance
: Symmetry between upper and lower for VC (±25mV)

Focus error balance
: Optimum eye pattern

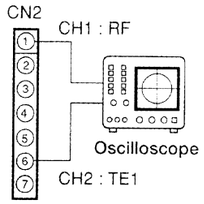

Tracking gain :
Two VTVMs should read the same value.

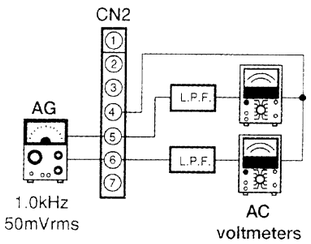

RECORD/PLAY BACK UNIT (X28-)

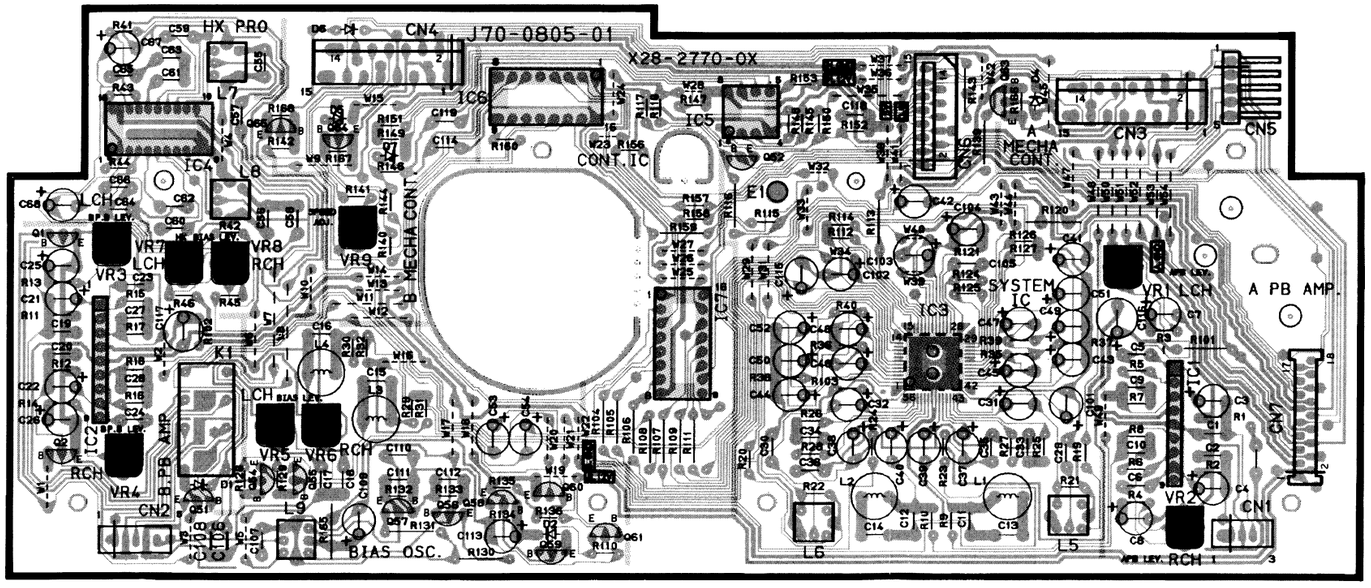

Refer to the schematic diagram for the values of resistors and capacitors.

PC BOARD (Component side view)

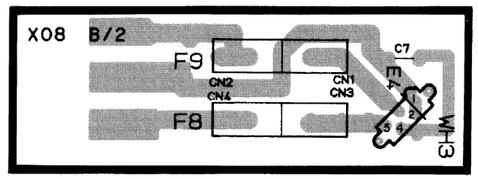

SURROUND UNIT (X08-)

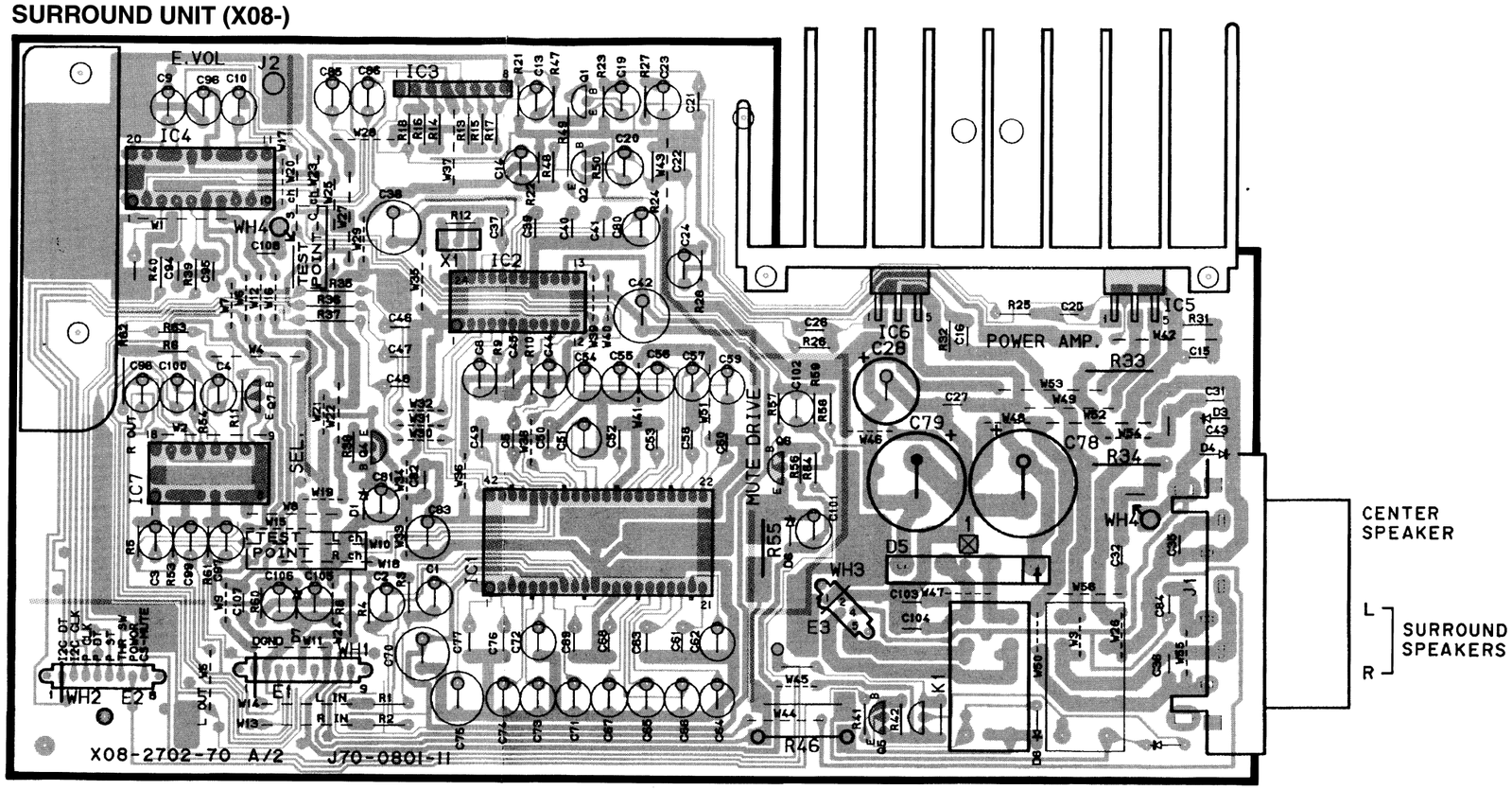

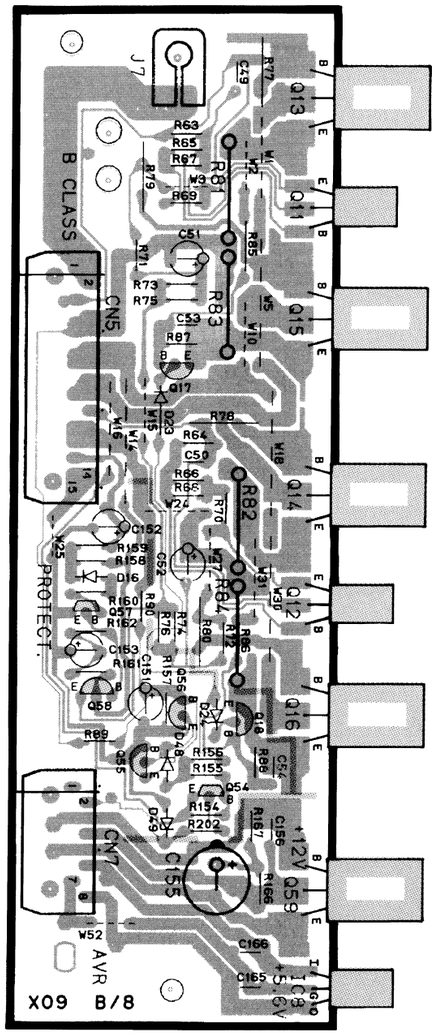

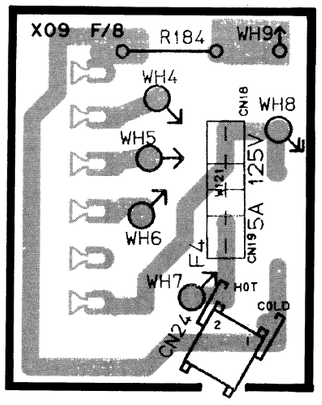

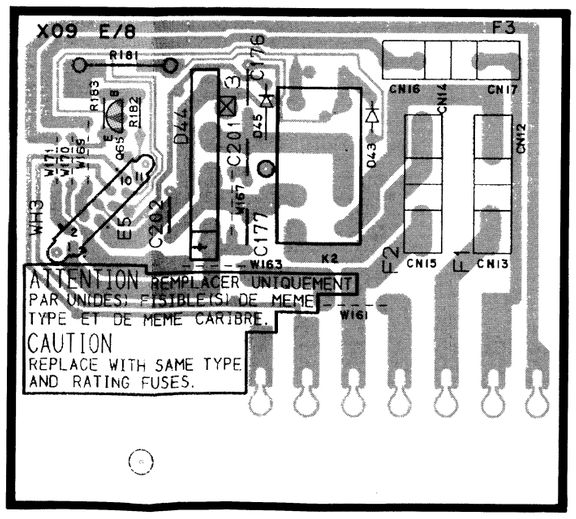

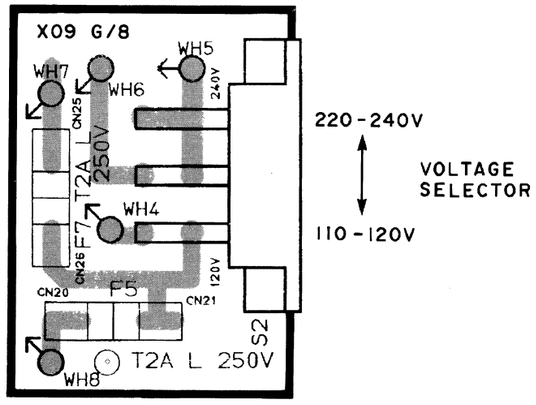

Refer to the schematic diagram for the values of resistors and capacitors.

PC BOARD (Component side view)

DISPLAY UNIT (X14-)

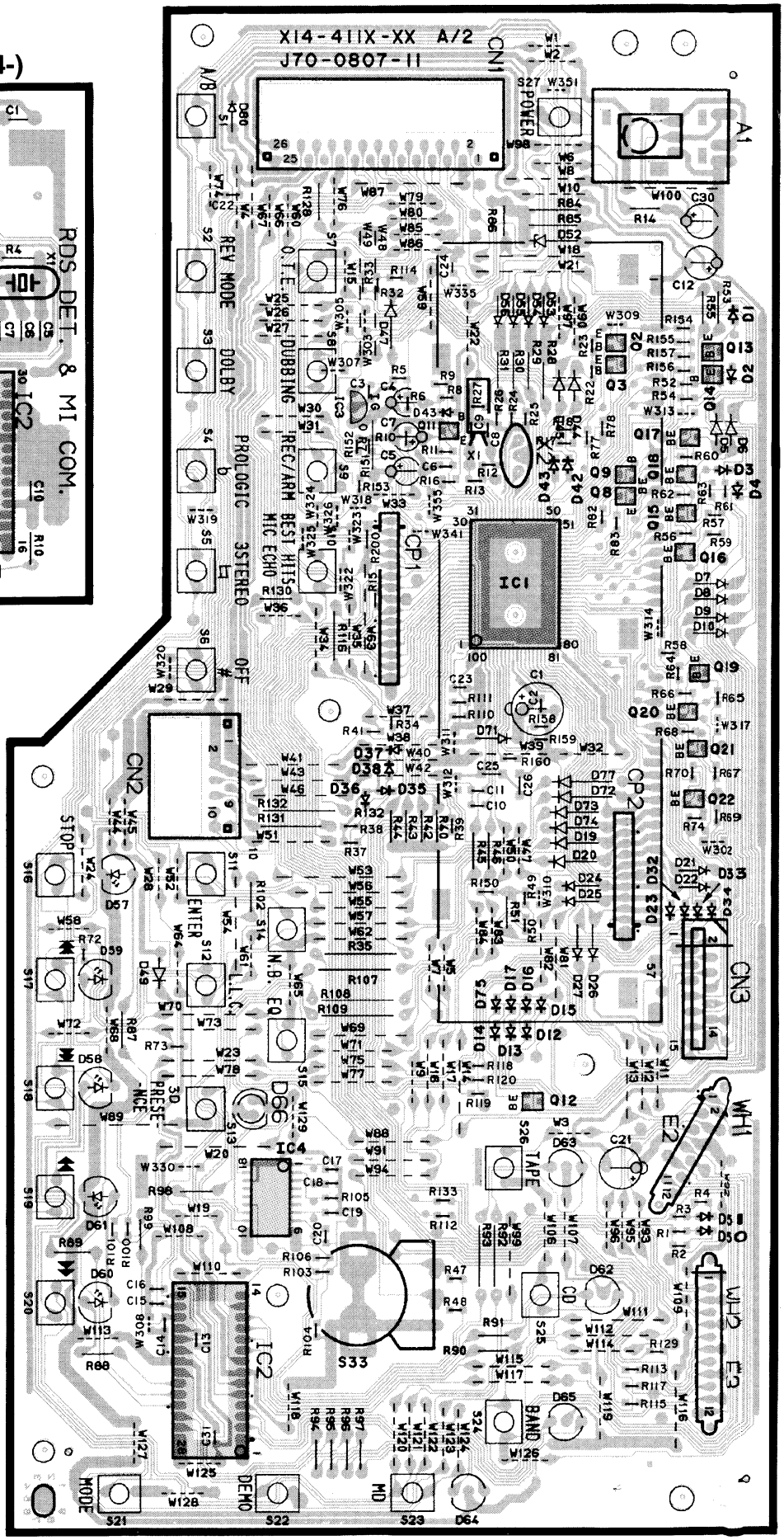

RDS UNIT (X04-)

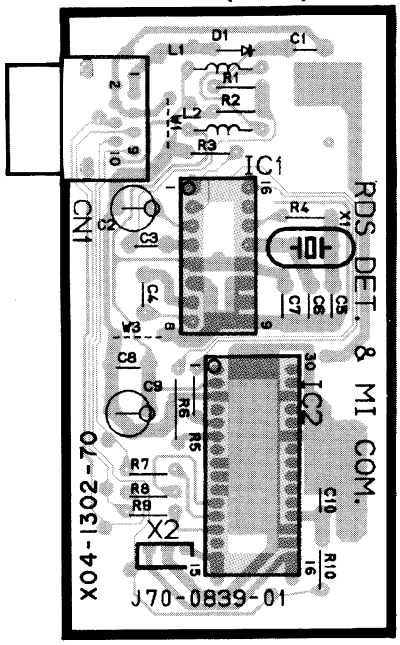

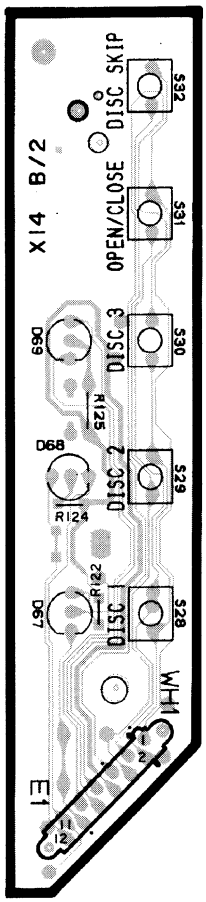

Refer to the schematic diagram for the values of resistors and capacitors.

RXD-G3/G4/G5/G31/G51

PARTS DESCRIPTIONS

CAPACITORS

CC 45 TH 1H 220 J
1 2 3 4 5 6

1 = Type ... ceramic, electrolytic, etc.
2 = Shape ... round, square, ect.
3 = Temp. coefficient
4 = Voltage rating
5 = Value
6 = Tolerance

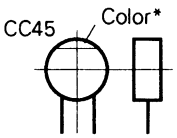

• Capacitor value

010 = 1pF
100 = 10pF
101 = 100pF
102 = 1000pF = 0.001μF
103 = 0.01μF

2 2 0 = 22pF
Multiplier
2nd number
1st number

• Temperature coefficient

1st Word	C	L	P	R	S	T	U
Color*	Black	Red	Orange	Yellow	Green	Blue	Violet
ppm/°C	0	–80	–150	–220	–330	–470	–750

2nd Word	G	H	J	K	L
ppm/°C	±30	±60	±120	±250	±500

Example : CC45TH = –470 ± 60ppm/°C

• Tolerance (More than 10pF)

Code	C	D	G	J	K	M	X	Z	P	No code
(%)	±0.25	±0.5	±2	±5	±10	±20	+40 –20	+80 -20	+100 –0	More than 10μF – 10 ~ +50 Less than 4.7μF –10 ~ +75

(Less than 10pF)

Code	B	C	D	F	G
(pF)	±0.1	±0.25	±0.5	±1	±2

• Voltage rating

1st word \ 2nd word	A	B	C	D	E	F	G	H	J	K	V
0	1.0	1.25	1.6	2.0	2.5	3.15	4.0	5.0	6.3	8.0	–
1	10	12.5	16	20	25	31.5	40	50	63	80	35
2	100	125	160	200	250	315	400	500	630	800	–
3	1000	1250	1600	2000	2500	3150	4000	5000	6300	8000	–

• Chip capacitors

(EX) C C 7 3 F S L 1 H 0 0 0 J
1 2 3 4 5 6 7
(Chip) (CH, RH, UJ, SL)

(EX) C K 7 3 F F 1 H 0 0 0 Z
1 2 3 4 5 6 7
(Chip) (B, F)

Refer to the table above.
1 = Type
2 = Shape
3 = Dimension
4 = Temp. coefficient
5 = Voltage rating
6 = Value
7 = Tolerance

Dimension (Chip capacitors)

Dimension code	L	W	T
Empty	5.6 ± 0.5	5.0 ± 0.5	Less than 2.0
A	4.5 ± 0.5	3.2 ± 0.4	Less than 2.0
B	4.5 ± 0.5	2.0 ± 0.3	Less than 2.0
C	4.5 ± 0.5	1.25 ± 0.2	Less than 1.25
D	3.2 ± 0.4	2.5 ± 0.3	Less than 1.5
E	3.2 ± 0.2	1.6 ± 0.2	Less than 1.25
F	2.0 ± 0.3	1.25 ± 0.2	Less than 1.25
G	1.6 ± 0.2	0.8 ± 0.2	Less than 1.0

RESISTORS

• Chip resistor (Carbon)

(EX) R K 7 3 E B 2 B 0 0 0 J
1 2 3 4 5 6 7
(Chip) (B,F)

Dimension

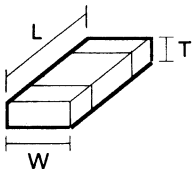

• Carbon resistor (Normal type)

(EX) R D 1 4 B B 2 C 0 0 0 J
1 2 3 4 5 6 7

1 = Type
2 = Shape
3 = Dimension
4 = Temp. coefficient
5 = Rating wattage
6 = Value
7 = Tolerance

Dimension (Chip resistor)

Dimension code	L	W	T
E	3.2 ± 0.2	1.6 ± 0.2	1.0
F	2.0 ± 0.3	1.25 ± 0.2	1.0
G	1.6±0.2	0.8±0.2	0.5±0.1

Rating wattage

Code	Wattage	Code	Wattage	Code	Wattage
1J	1/16W	2C	1/6W	3A	1W
2A	1/10W	2E	1/4W	3D	2W
2B	1/8W	2H	1/2W		

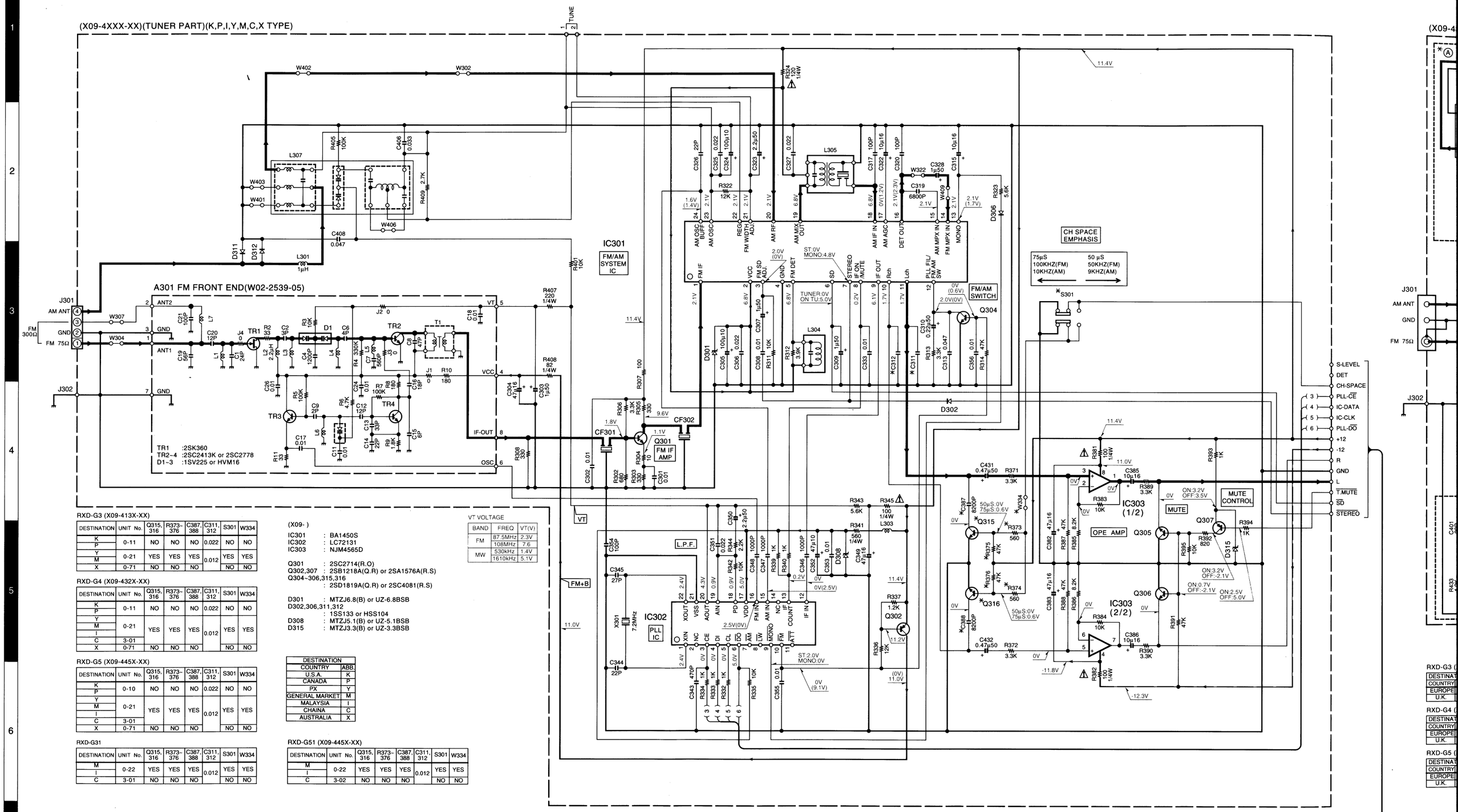

RXD-G3 (X09-413X-XX)

DESTINATION	UNIT No.	Q315, 316	R373~376	C387, 388	C311, 312	S301	W334
K	0-11	NO	NO	NO	0.022	NO	NO
P							
Y	0-21	YES	YES	YES	0.012	YES	YES
M							
X	0-71	NO	NO	NO		NO	NO

RXD-G4 (X09-432X-XX)

DESTINATION	UNIT No.	Q315, 316	R373~376	C387, 388	C311, 312	S301	W334
K	0-11	NO	NO	NO	0.022	NO	NO
P							
Y	0-21	YES	YES	YES	0.012	YES	YES
M							
I							
C	3-01						
X	0-71	NO	NO	NO		NO	NO

RXD-G5 (X09-445X-XX)

DESTINATION	UNIT No.	Q315, 316	R373~376	C387, 388	C311, 312	S301	W334
K	0-10	NO	NO	NO	0.022	NO	NO
P							
Y	0-21	YES	YES	YES	0.012	YES	YES
M							
I							
C	3-01						
X	0-71	NO	NO	NO		NO	NO

RXD-G31

DESTINATION	UNIT No.	Q315, 316	R373~376	C387, 388	C311, 312	S301	W334
M	0-22	YES	YES	YES	0.012	YES	YES
I							
C	3-01	NO	NO	NO		NO	NO

(X09-)

IC301 : BA1450S
IC302 : LC72131
IC303 : NJM4565D

Q301 : 2SC2714(R.O)
Q302,307 : 2SB1218A(Q.R) or 2SA1576A(R.S)
Q304~306,315,316
: 2SD1819A(Q.R) or 2SC4081(R.S)

D301 : MTZJ6.8(B) or UZ-6.8BSB
D302,306,311,312
: 1SS133 or HSS104
D308 : MTZJ5.1(B) or UZ-5.1BSB
D315 : MTZJ3.3(B) or UZ-3.3BSB

VT VOLTAGE

BAND	FREQ	VT(V)
FM	87.5MHz	2.3V
	108MHz	7.6
MW	530kHz	1.4V
	1610kHz	5.1V

DESTINATION	
COUNTRY	ABB.
U.S.A.	K
CANADA	P
PX	Y
GENERAL MARKET	M
MALAYSIA	I
CHAINA	C
AUSTRALIA	X

RXD-G51 (X09-445X-XX)

DESTINATION	UNIT No.	Q315, 316	R373~376	C387, 388	C311, 312	S301	W334
M	0-22	YES	YES	YES	0.012	YES	YES
I							
C	3-02	NO	NO	NO		NO	NO

CAUTION: *For continued safety, replace safety critical components only with manufacturer's recommended parts (refer to parts list). ⚠ indicates safety critical components. For continued protection against risk of fire, replace only with same type and rating fuse(s). To reduce the risk of electric shock, leakage-current or resistance measurements shall be carried out (exposed parts are acceptably insulated from the supply circuit) before the appliance is returned to the customer.*

The DC voltage is an actual reading measured with a high impedance type voltmeter as the AM/FM signal generator is specified to the conditions as shown in the list below. The measurement value may vary depending on the measuring instruments used or on the product. The value shown in ( ) is actual reading measured in the AM mode.

MODE	CARRIER	MODULATION		ANT INPUT
		FREQUENCY	DEVIATION	
FM	98MHz	1kHz	STEREO 67.5kHz 7.5kHz(Pilot)	60dB
AM	1000(999)kHz	400Hz	MONO 30% MOD	60dB

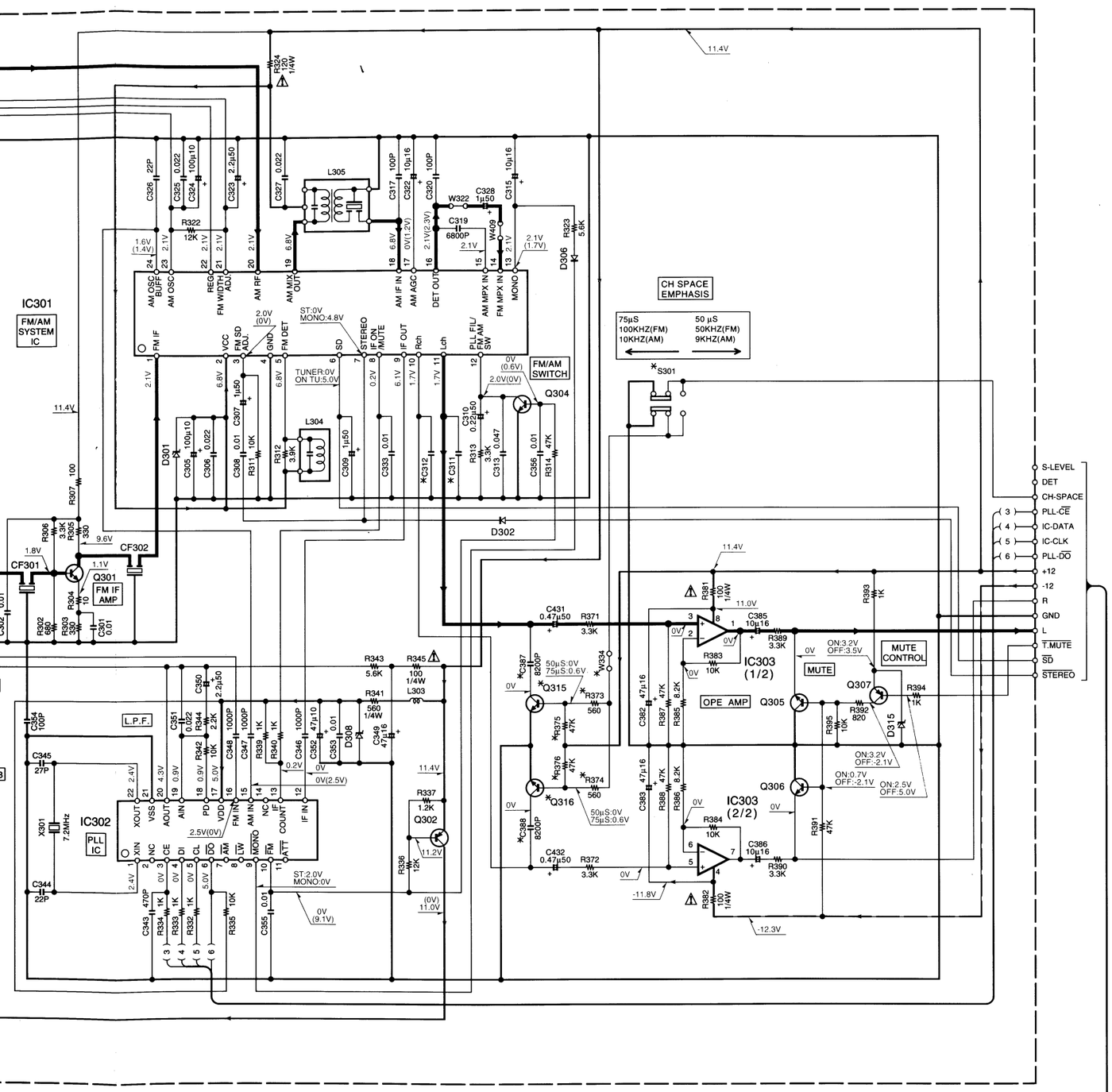

(X09-43XX-XX)(TUNER PART)(T,E TYPE)

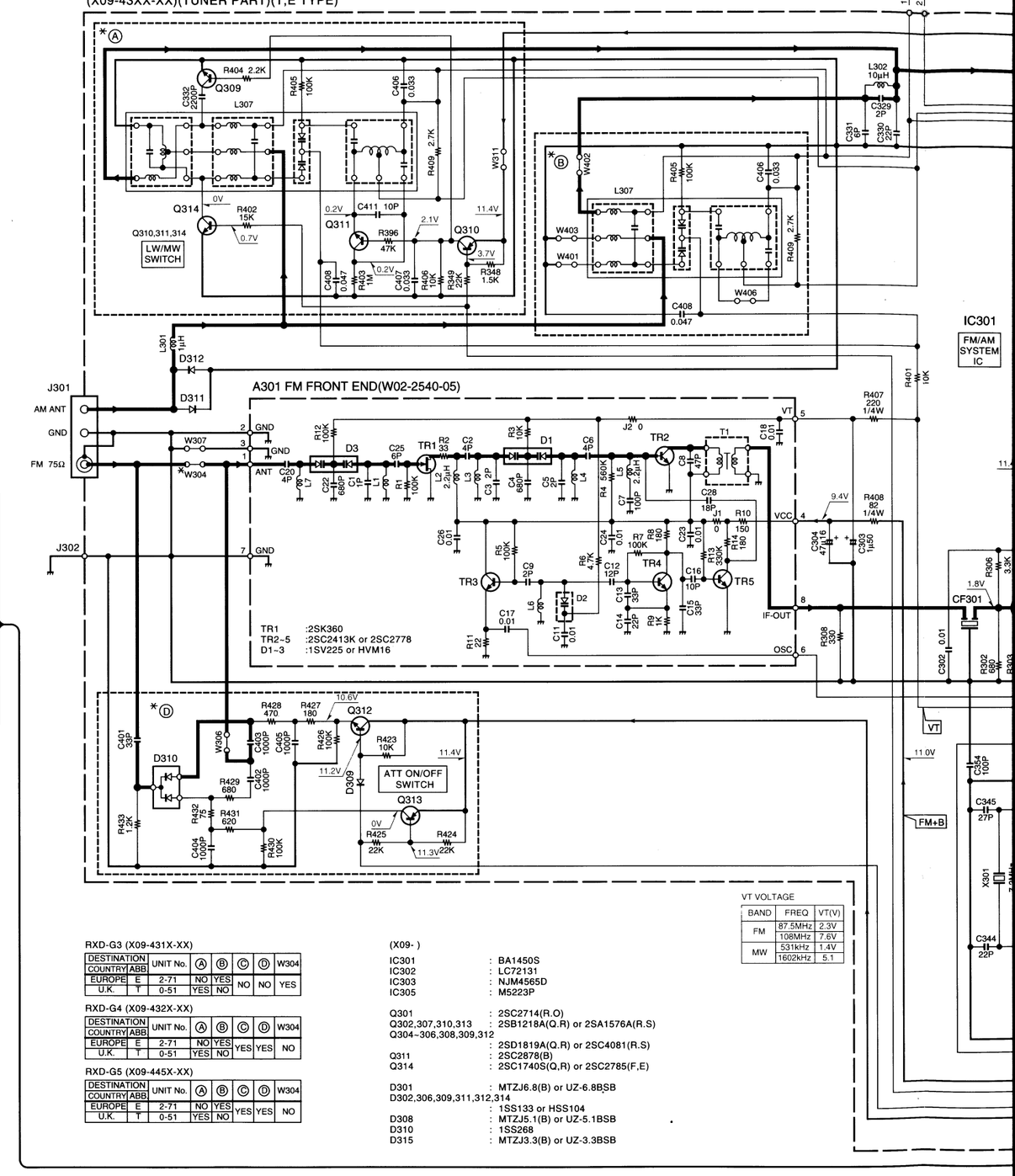

VT VOLTAGE

BAND	FREQ	VT(V)
FM	87.5MHz	2.3V
	108MHz	7.6V
MW	531kHz	1.4V
	1602kHz	5.1

RXD-G3 (X09-431X-XX)

DESTINATION		UNIT No.	Ⓐ	Ⓑ	Ⓒ	Ⓓ	W304
COUNTRY	ABB.						
EUROPE	E	2-71	NO	YES	NO	NO	YES
U.K.	T	0-51	YES	NO			

RXD-G4 (X09-432X-XX)

DESTINATION		UNIT No.	Ⓐ	Ⓑ	Ⓒ	Ⓓ	W304
COUNTRY	ABB.						
EUROPE	E	2-71	NO	YES	YES	YES	NO
U.K.	T	0-51	YES	NO			

RXD-G5 (X09-445X-XX)

DESTINATION		UNIT No.	Ⓐ	Ⓑ	Ⓒ	Ⓓ	W304
COUNTRY	ABB.						
EUROPE	E	2-71	NO	YES	YES	YES	NO
U.K.	T	0-51	YES	NO			

(X09-)

IC301 : BA1450S
IC302 : LC72131
IC303 : NJM4565D
IC305 : M5223P

Q301 : 2SC2714(R.O)
Q302,307,310,313 : 2SB1218A(Q.R) or 2SA1576A(R.S)
Q304~306,308,309,312 : 2SD1819A(Q.R) or 2SC4081(R.S)
Q311 : 2SC2878(B)
Q314 : 2SC1740S(Q,R) or 2SC2785(F,E)

D301 : MTZJ6.8(B) or UZ-6.8BSB
D302,306,309,311,312,314 : 1SS133 or HSS104
D308 : MTZJ5.1(B) or UZ-5.1BSB
D310 : 1SS268
D315 : MTZJ3.3(B) or UZ-3.3BSB

an actual reading measured with a high impedance type
/FM signal generator is specified to the conditions as shown in
measurement value may vary depending on the measuring
on the product. The value shown in ( ) is actual reading
mode.

MODE	CARRIER	MODULATION		ANT INPUT
		FREQUENCY	DEVIATION	
FM	98MHz	1kHz	STEREO 67.5kHz 7.5kHz(Pilot)	60dB
AM	1000(999)kHz	400Hz	MONO 30% MOD	60dB

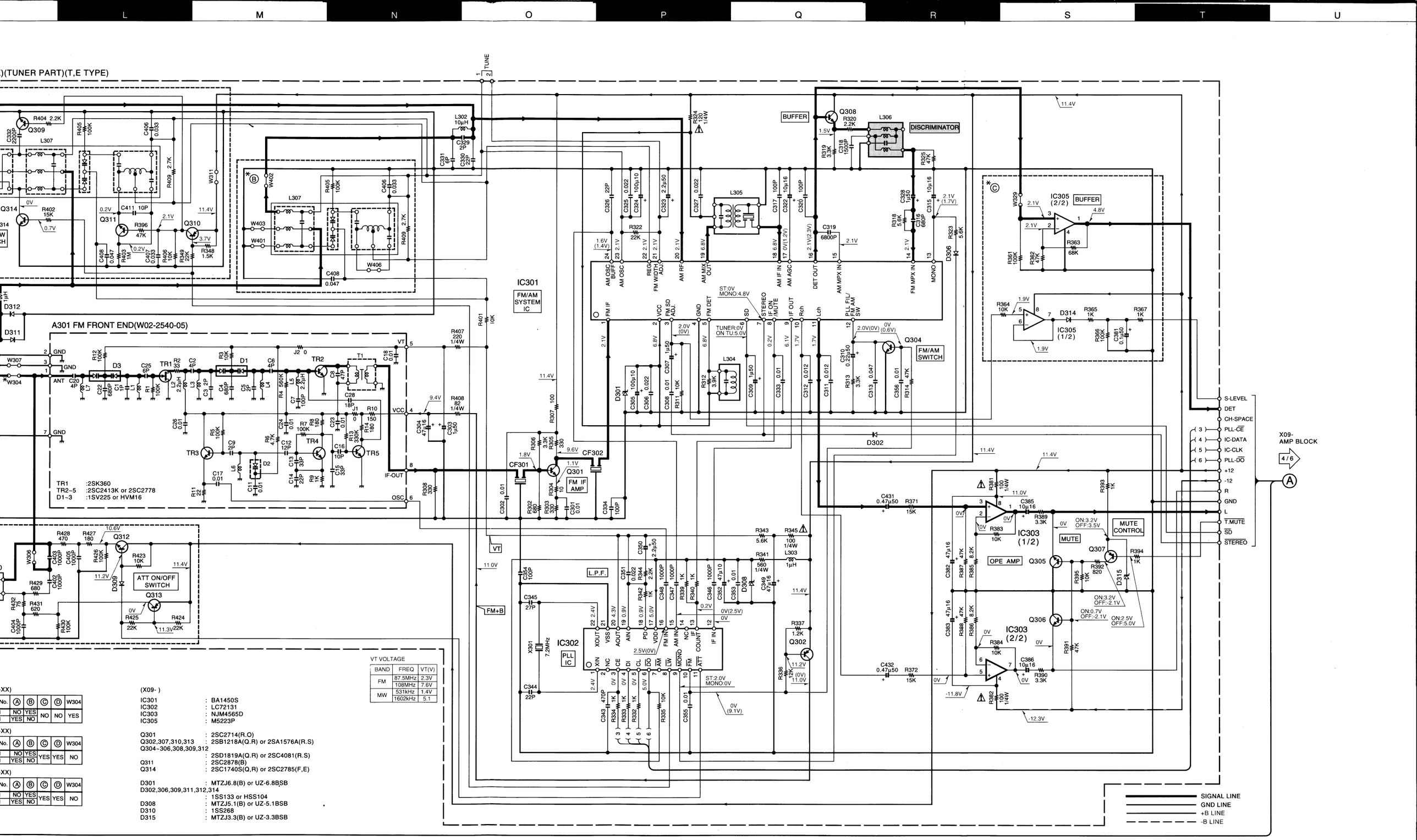

VT VOLTAGE		
BAND	FREQ	VT(V)
FM	87.5MHz	2.3V
	108MHz	7.6V
MW	531kHz	1.4V
	1602kHz	5.1

(XX)						
No.	Ⓐ	Ⓑ	Ⓒ	Ⓓ	W304
	NO	YES	NO	NO	YES
	YES	NO			

(XX)						
No.	Ⓐ	Ⓑ	Ⓒ	Ⓓ	W304
	NO	YES	YES	YES	NO
	YES	NO			

(XX)						
No.	Ⓐ	Ⓑ	Ⓒ	Ⓓ	W304
	NO	YES	YES	YES	NO
	YES	NO			

(X09-)

IC301	: BA1450S
IC302	: LC72131
IC303	: NJM4565D
IC305	: M5223P
Q301	: 2SC2714(R.O)
Q302,307,310,313	: 2SB1218A(Q.R) or 2SA1576A(R.S)
Q304~306,308,309,312	: 2SD1819A(Q.R) or 2SC4081(R.S)
Q311	: 2SC2878(B)
Q314	: 2SC1740S(Q,R) or 2SC2785(F,E)
D301	: MTZJ6.8(B) or UZ-6.8BSB
D302,306,309,311,312,314	: 1SS133 or HSS104
D308	: MTZJ5.1(B) or UZ-5.1BSB
D310	: 1SS268
D315	: MTZJ3.3(B) or UZ-3.3BSB

RXD-G3/G4/G5/G31/G51(K)(1/6)

Y39-2300-00

RXD-G3/G4/G5/G31/G51

KENWOOD

MODEL NAME	UNIT No.	A	C17, 18	C111, 112	C107	C113	R110	R127	R130, 131	R132, 133	VR5,6	L9	VR9
RXD-G3 RXD-G31	X28-2770-00	NO	YES	3300P	8200P 100	2.2μ50	YES	82K	5.6 1/4W	33K	YES	L32-0542-05	R12-1619-05
RXD-G4 RXD-G5 RXD-G51	X28-2770-01	YES	NO	5600P	0.01μ 100	4.7μ35	NO	120K	10 1/4W	22K	NO	L32-0570-05	R32-0036-05

(X28-)

IC1,2 : TA8125S
IC3 : HA12182F
IC4 : μPC1297CA
IC5 : BA10393
IC6,7 : BU4094BC

Q1,2,51,61 : DTC124ES or UN4212
Q52,56,57,59 : 2SC2785(F.E) or 2SC1740S(Q.R)
Q54,55 : 2SC1845(F.E)
Q58 : 2SC3940A(R.S)
Q60 : 2SA992(F.E)
Q63-65 : 2SC3246

D1,2,4-6 : 1SS133 or HSS104
D7 : UZ-2.7BSB or MTZJ2.7(B)

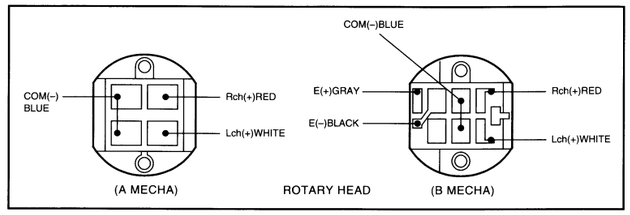

RECORDING LINE
SIGNAL LINE
GND LINE
+B LINE
-B LINE

DECK MECHA (RVS type) D40-1427-08

A(PB) MECHA

B(RP) MECHA

(X28-2770-0X)

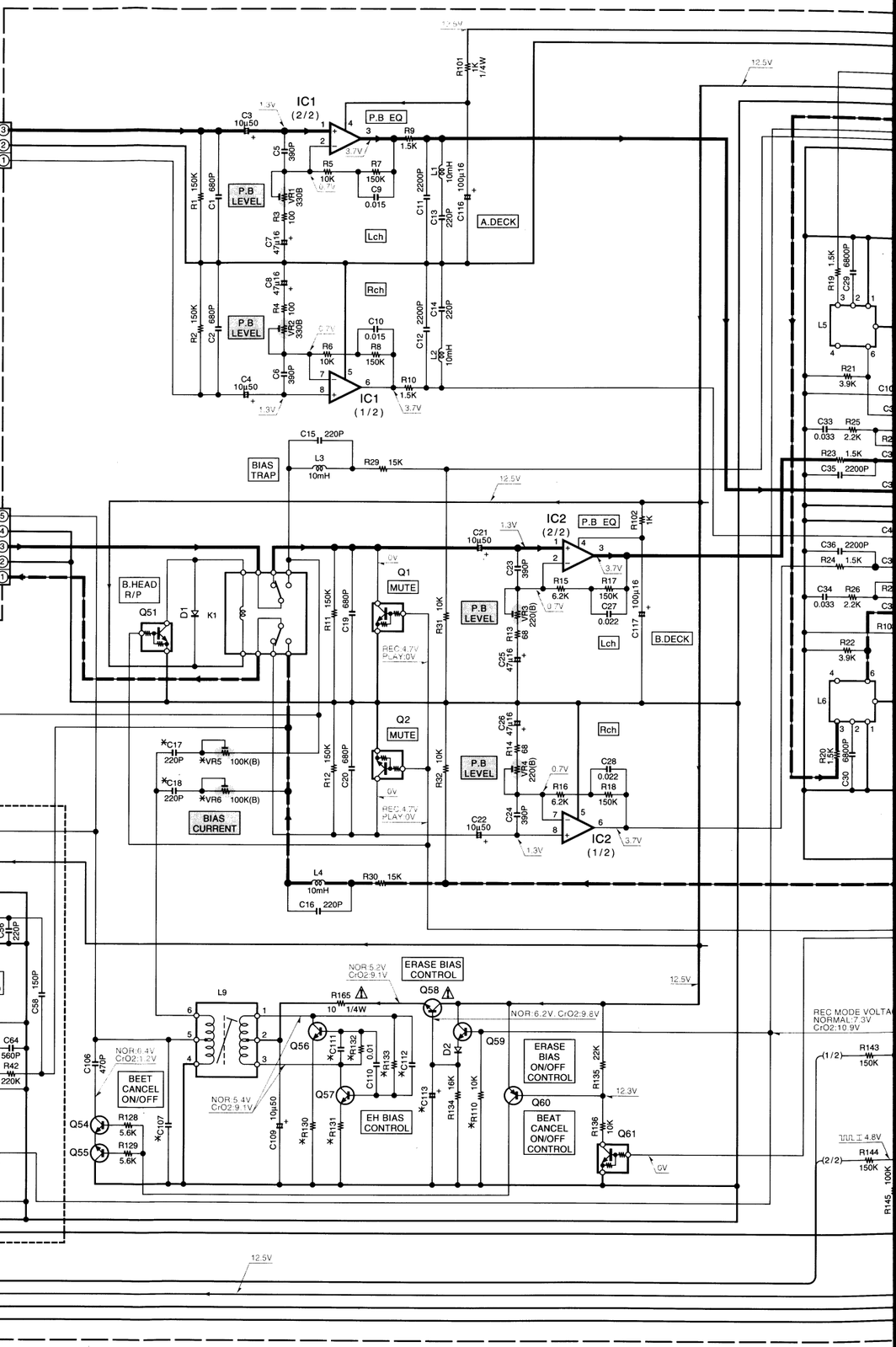

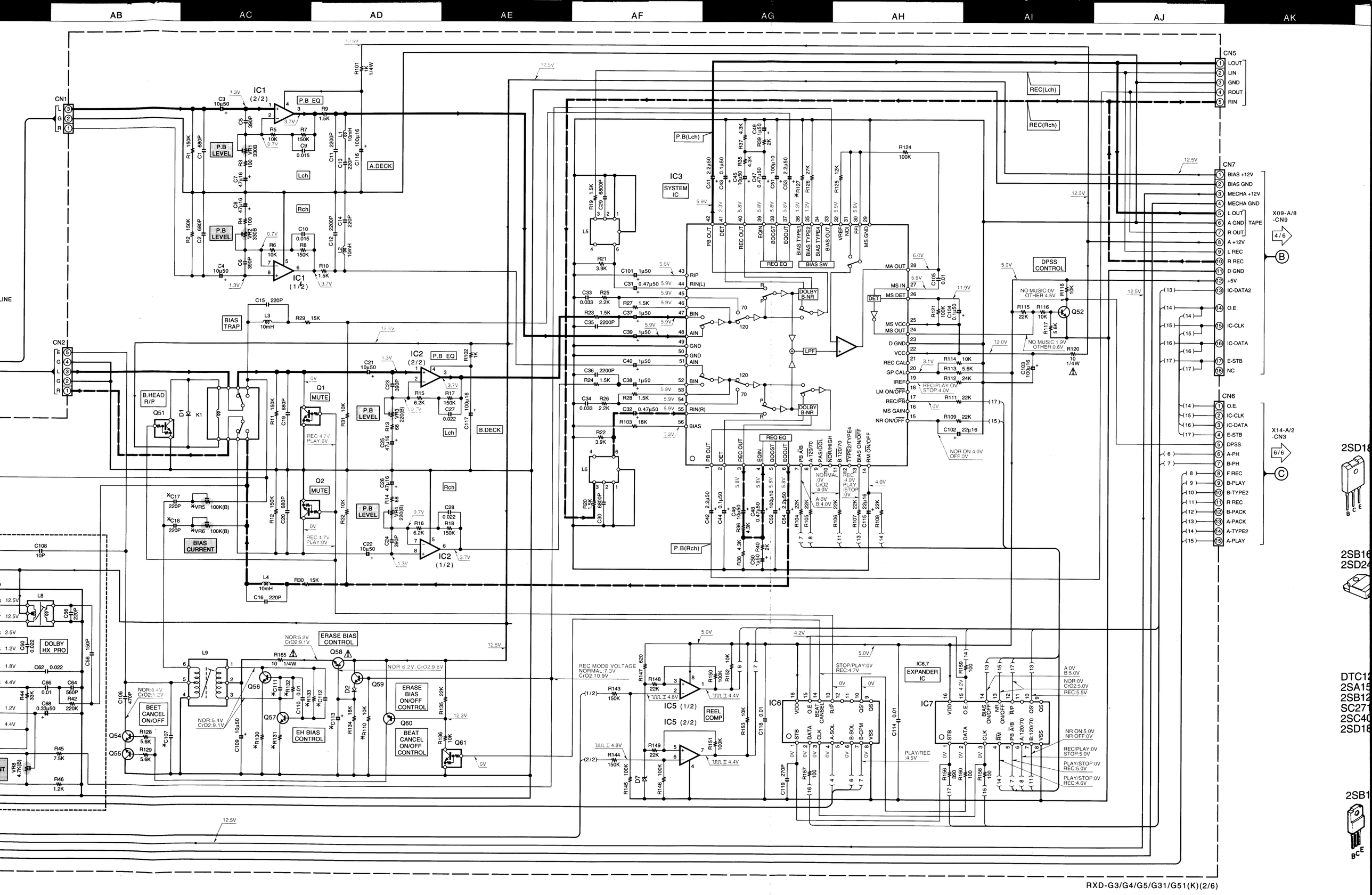
AB
AC
AD
AE
AF
AG
AH
AI
AJ
AK
CN1
CN2
CN5
CN7
CN6
IC1 (2/2)
IC1 (1/2)
IC2 (2/2)
IC2 (1/2)
IC3
SYSTEM IC
IC5 (1/2)
IC5 (2/2)
IC6
IC7
EXPANDER IC
P.B EQ
P.B LEVEL
A.DECK
B.DECK
Lch
Rch
BIAS TRAP
B.HEAD R/P
MUTE
BIAS CURRENT
DOLBY HX PRO
BEET CANCEL ON/OFF
ERASE BIAS CONTROL
EH BIAS CONTROL
ERASE BIAS ON/OFF CONTROL
BEAT CANCEL ON/OFF CONTROL
REEL COMP
DOLBY B-NR
LPF
REQ EQ
BIAS SW
DPSS CONTROL
REC(Lch)
REC(Rch)
P.B(Lch)
P.B(Rch)
LOUT
LIN
GND
ROUT
RIN
BIAS +12V
BIAS GND
MECHA +12V
MECHA GND
L OUT
A GND
R OUT
A +12V
L REC
R REC
D GND
+5V
IC-DATA2
O.E.
IC-CLK
IC-DATA
E-STB
NC
TAPE
X09-A/8 -CN9
4/6
X14-A/2 -CN3
6/6
DPSS
A-PH
B-PH
F REC
B-PLAY
B-TYPE2
B-PACK
A-PACK
A-TYPE2
A-PLAY
2SD18
2SB16
2SD24
DTC12
2SA15
2SB12
SC27
2SC40
2SD18
2SB1
REC MODE VOLTAGE NORMAL:7.3V CrO2:10.9V
NOR:5.2V CrO2:9.1V
NOR:6.2V CrO2:9.8V
NOR:5.4V CrO2:9.1V
NOR:6.4V CrO2:11.2V
REC:4.7V PLAY:0V
NO MUSIC:0V OTHER:4.5V
NO MUSIC:1.9V OTHER:0.6V
NOR ON:4.0V OFF:0V
REC/PLAY:0V STOP:4.0V
STOP/PLAY:0V REC:4.7V
PLAY/REC :4.5V
A:0V B:5.0V
NOR:0V CrO2:5.0V
REC:5.5V
NR ON:5.0V NR OFF:0V
REC/PLAY:0V STOP:5.0V
PLAY/STOP:0V REC:5.0V
PLAY/STOP:0V REC:4.6V

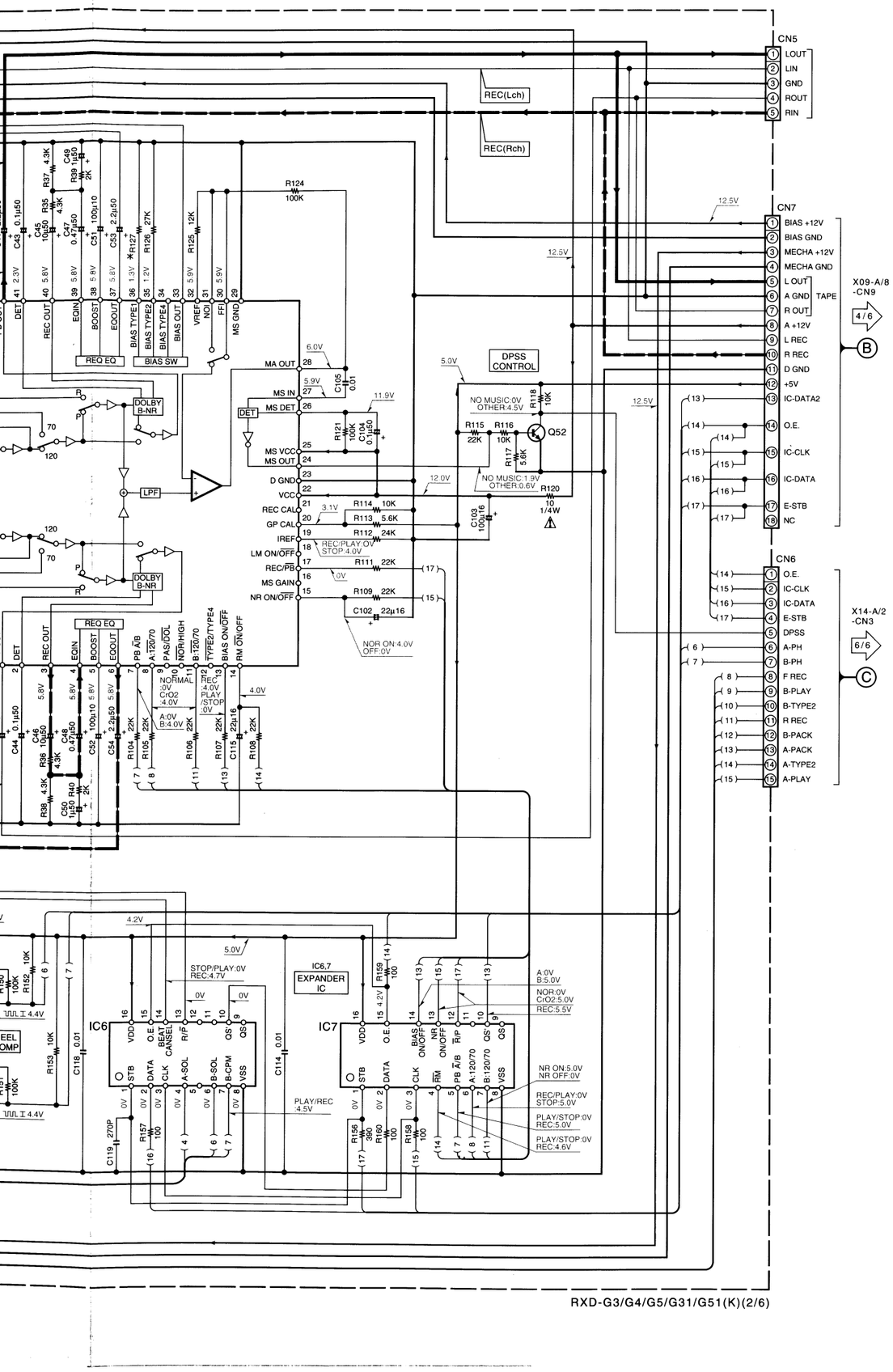

RXD-G3/G4/G5/G31/G51(K)(2/6)

CAUTION: *For continued safety, replace safety critical components only with manufacturer's recommended parts (refer to parts list). ⚠ indicates safety critical components. For continued protection against risk of fire, replace only with same type and rating fuse(s). To reduce the risk of electric shock, leakage-current or resistance measurements shall be carried out (exposed parts are acceptably insulated from the supply circuit) before the appliance is returned to the customer.*

The DC voltage is an actual reading measured with a high impedance type voltmeter with a cassette loaded at playback mode. The measurement value may vary depending on the measuring instruments used or on the product. Bias circuit DC voltage is measured while in the record mode.

DOLBY and the double-D symbol are trademarks of Dolby Laboratories Licensing Corporation. Noise reduction circuit made under license from Dolby Laboratories Licensing Corporation.

2SA1286
2SA954
2SA992
2SC1845
2SC2003

2SC2878
2SC3246
2SC3940A
2SD863

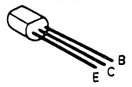

2SB1375

2SD1893

2SB1559
2SD2389

NJM2100D
NJM4565D

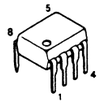

2SD1894

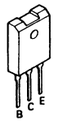

2SB1565

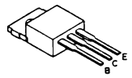

XRU4052BC

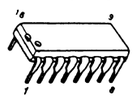

TC74HC166AP

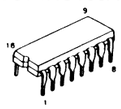

TA8125S
TA8409S

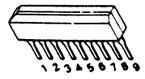

2SB1624
2SD2493

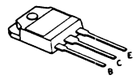

2SA1175
2SC2785

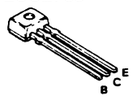

TDA7309

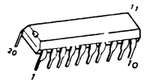

BA1450S

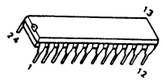

BU4094BC
SAA6579

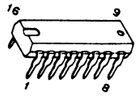

DTC124EU
2SA1576
2SB1218A2
SC2714
2SC4081
2SD1819A

2SC4137F50

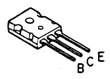

BA10393
M5223P

LA2785L
TDA7431

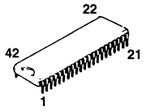

DTA124ES
DTC124ES
UN4112
2SA933S
2SC1740S

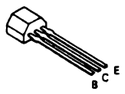

2SB1370

UN4212

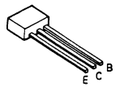

Y39-2300-00

RXD-G3/G4/G5/G31/G51

KENWOOD

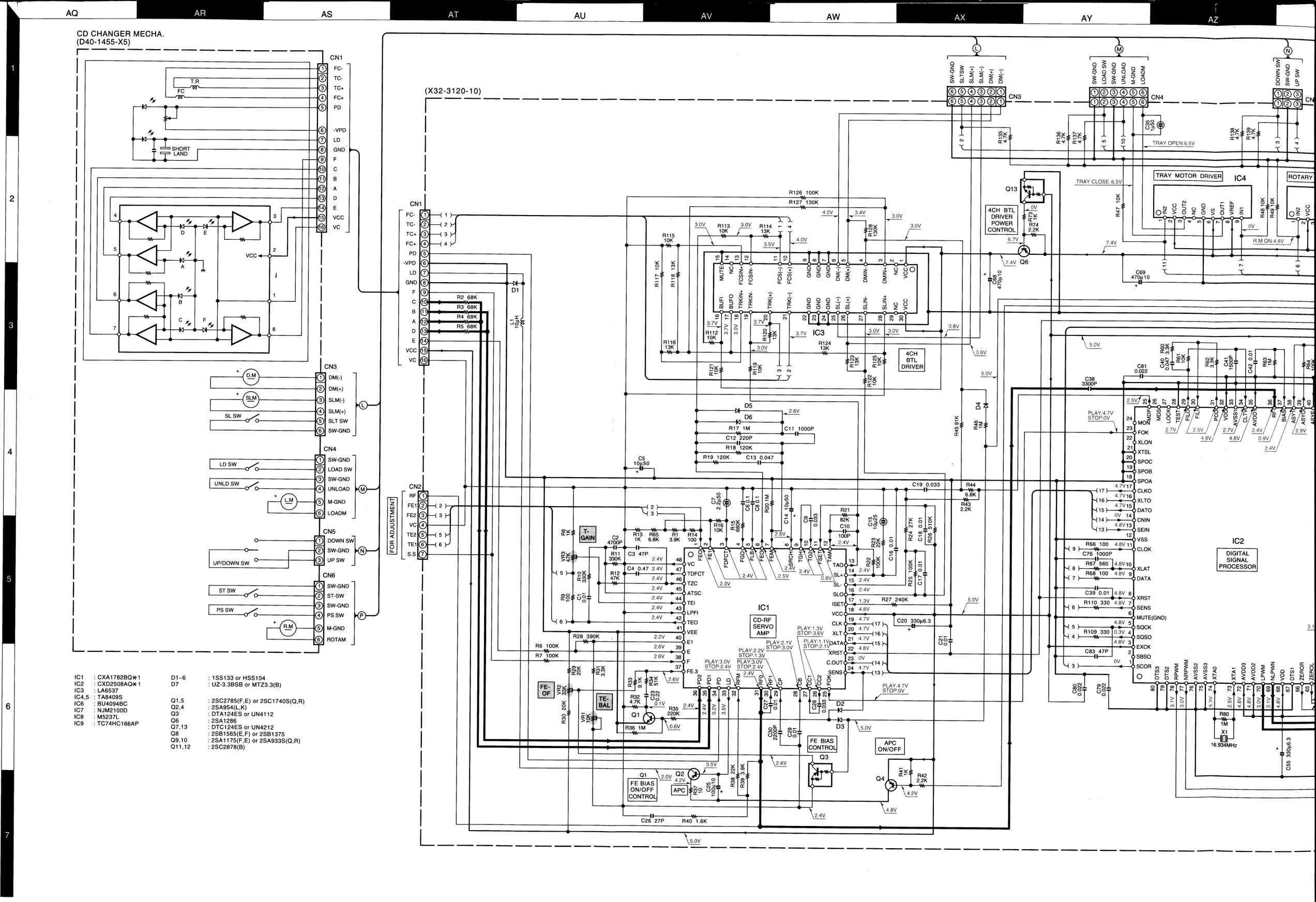

IC1	: CXA1782BQ✱1	D1~6	: 1SS133 or HSS104
IC2	: CXD2508AQ✱1	D7	: UZ-3.3BSB or MTZ3.3(B)
IC3	: LA6537		
IC4,5	: TA8409S	Q1,5	: 2SC2785(F,E) or 2SC1740S(Q,R)
IC6	: BU4094BC	Q2,4	: 2SA954(L,K)
IC7	: NJM2100D	Q3	: DTA124ES or UN4112
IC8	: M5237L	Q6	: 2SA1286
IC9	: TC74HC166AP	Q7,13	: DTC124ES or UN4212
		Q8	: 2SB1565(E,F) or 2SB1375
		Q9,10	: 2SA1175(F,E) or 2SA933S(Q,R)
		Q11,12	: 2SC2878(B)

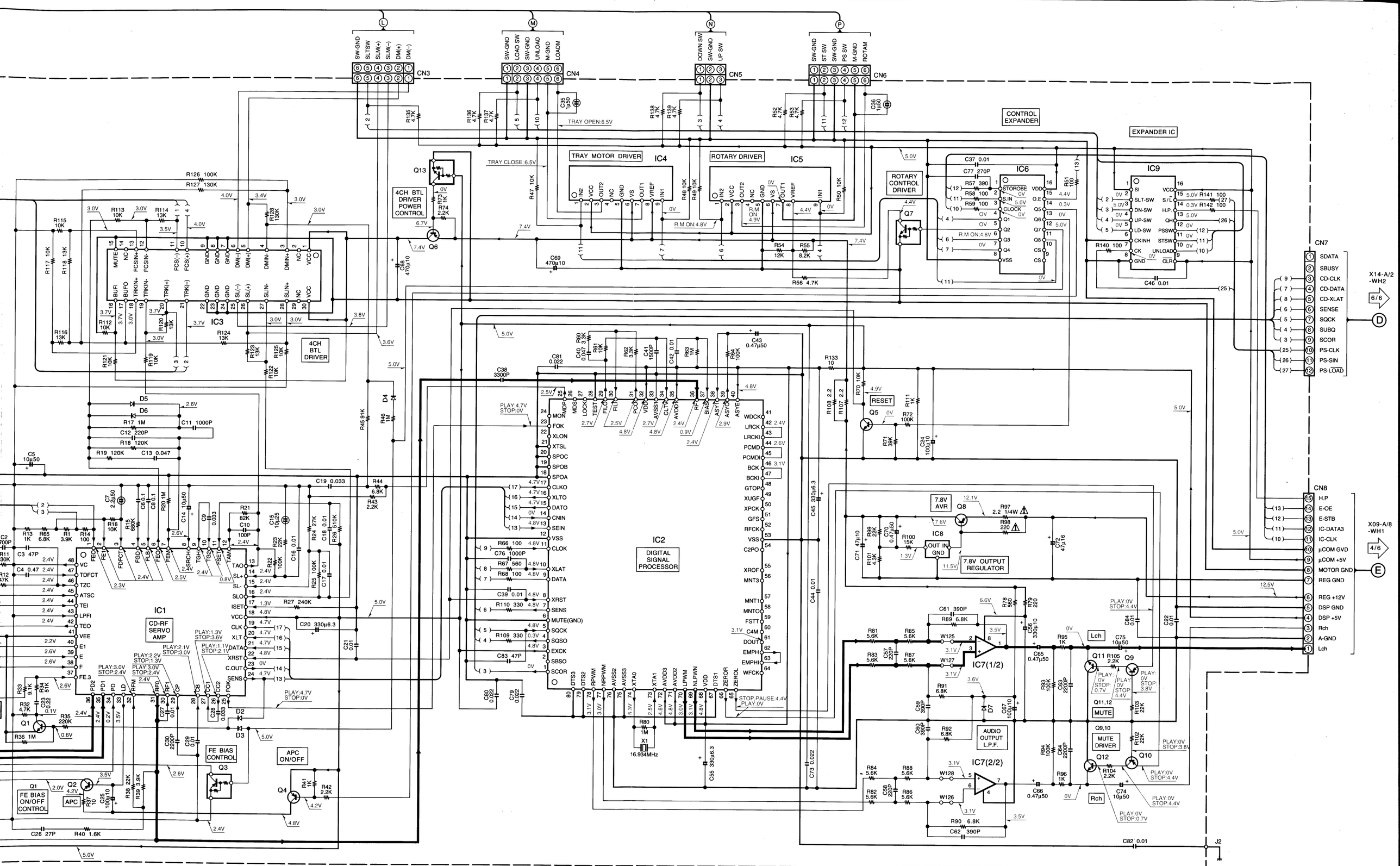
CN3
CN4
CN5
CN6
CN7
CN8
TRAY MOTOR DRIVER
IC4
ROTARY DRIVER
IC5
CONTROL EXPANDER
EXPANDER IC
IC6
IC9
ROTARY CONTROL DRIVER
4CH BTL DRIVER POWER CONTROL
IC3
4CH BTL DRIVER
IC1
CD-RF SERVO AMP
IC2
DIGITAL SIGNAL PROCESSOR
FE BIAS CONTROL
APC ON/OFF
FE BIAS ON/OFF CONTROL
RESET
7.8V AVR
7.8V OUTPUT REGULATOR
IC8
IC7(1/2)
IC7(2/2)
AUDIO OUTPUT L.P.F.
MUTE
MUTE DRIVER
X1
16.934MHz
X14-A/2 -WH2
X09-A/8 -WH1
J2

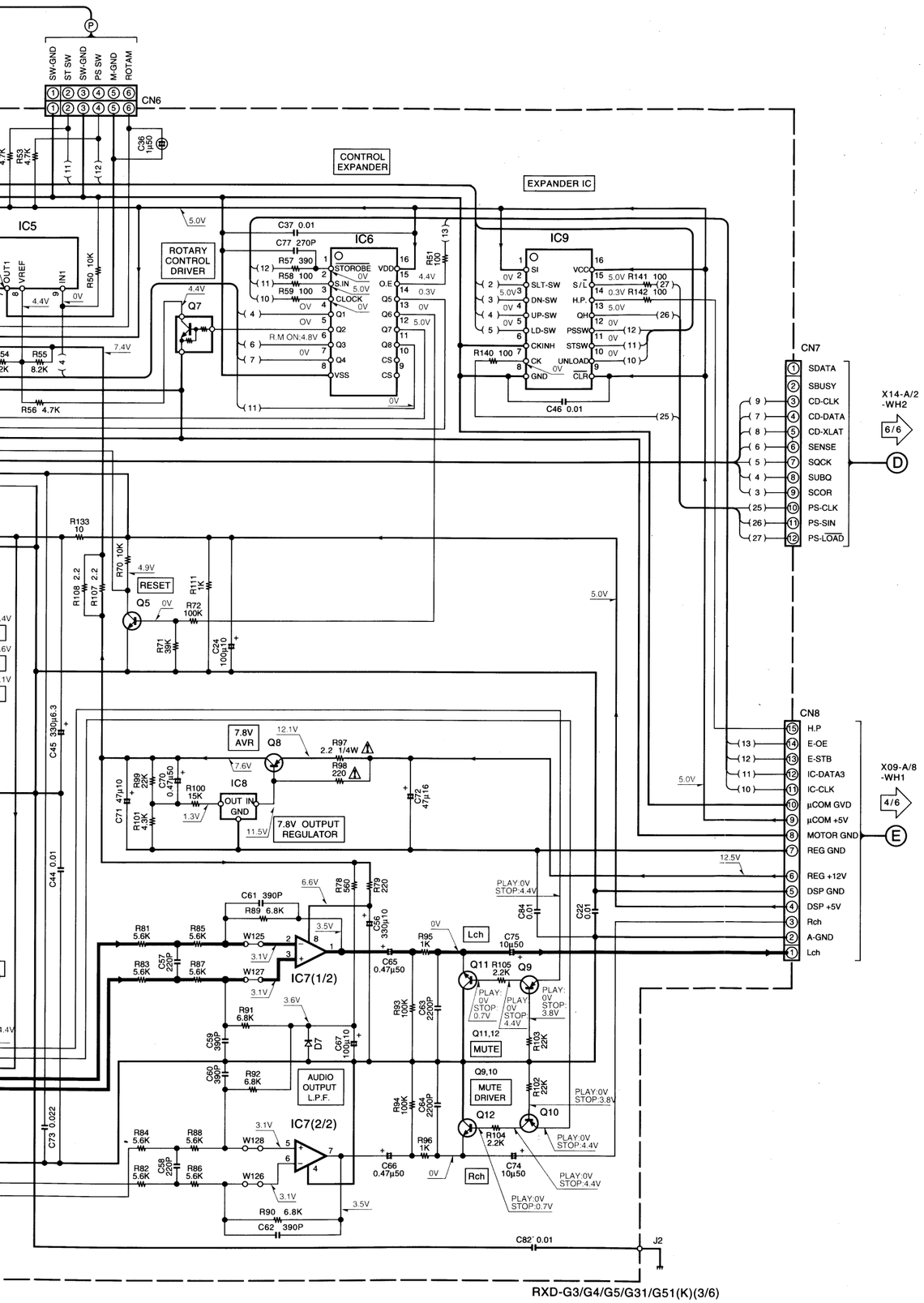

RXD-G3/G4/G5/G31/G51(K)(3/6)

CAUTION: *For continued safety, replace safety critical components only with manufacturer's recommended parts (refer to parts list). ⚠ indicates safety critical components. For continued protection against risk of fire, replace only with same type and rating fuse(s). To reduce the risk of electric shock, leakage-current or resistance measurements shall be carried out (exposed parts are acceptably insulated from the supply circuit) before the appliance is returned to the customer.*

The DC voltage is an actual reading measured with a high impedance type voltmeter. The measurement value may vary depending on the measuring instruments used or on the product. Refer to the voltage during PLAY unless otherwise specified; The value shown in ( ) is the voltage measured at the moment of STOP.

NJM4565MD

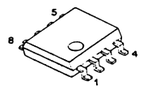

UN5212

BU4094BCF

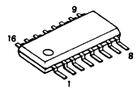

BU4066BCF

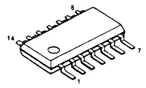

UPC1297CA

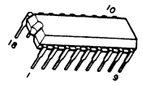

BA3835F

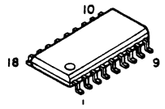

NJU7313AM

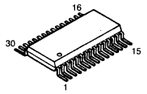

TDA2050V

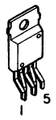

LC72131

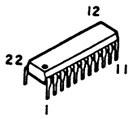

Y39-2300-00

RXD-G3/G4/G5/G31/G51

KENWOOD

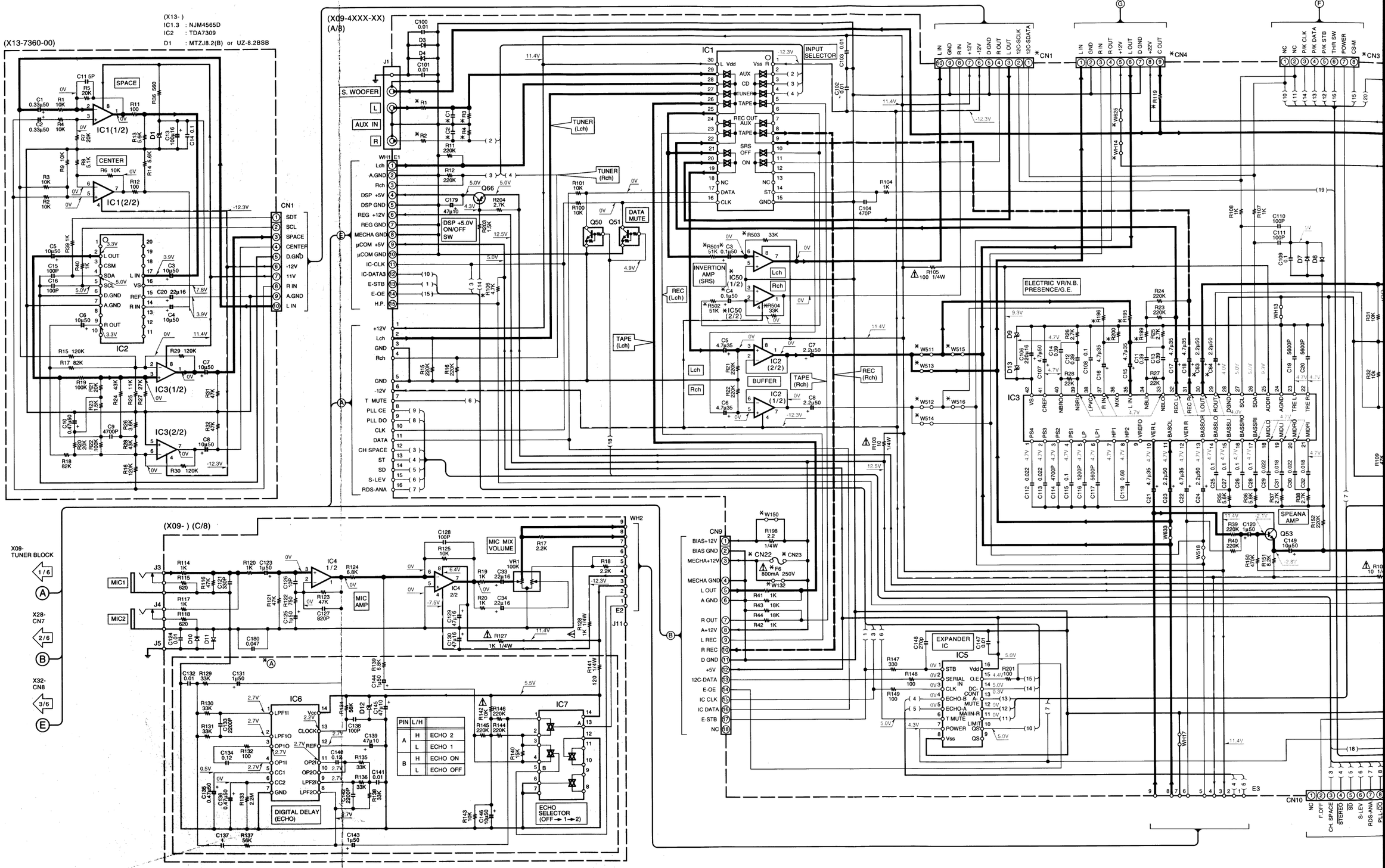

PIN	L/H	
A	H	ECHO 2
	L	ECHO 1
B	H	ECHO ON
	L	ECHO OFF

CAUTION: *For continued safety, replace safety critical components only with manufacturer's recommended parts (refer to parts list). ⚠ indicates safety critical components. For continued protection against risk of fire, replace only with same type and rating fuse(s). To reduce the risk of electric shock, leakage-current or resistance measurements shall be carried out (exposed parts are acceptably insulated from the supply circuit) before the appliance is returned to the customer.*

The DC voltage is an actual reading measured with a high impedance type voltmeter as the AM/FM signal generator is specified to the conditions as shown in the list below. The measurement value may vary depending on the measuring instruments used or on the product. The value shown in ( ) is actual reading measured in the AM mode.

MODE	CARRIER	MODULATION		ANT INPUT
		FREQUENCY	DEVIATION	
FM	98MHz	1kHz	STEREO 67.5kHz 7.5kHz(Pilot)	60dB
AM	1000(999)kHz	400Hz	MONO 30% MOD	60dB

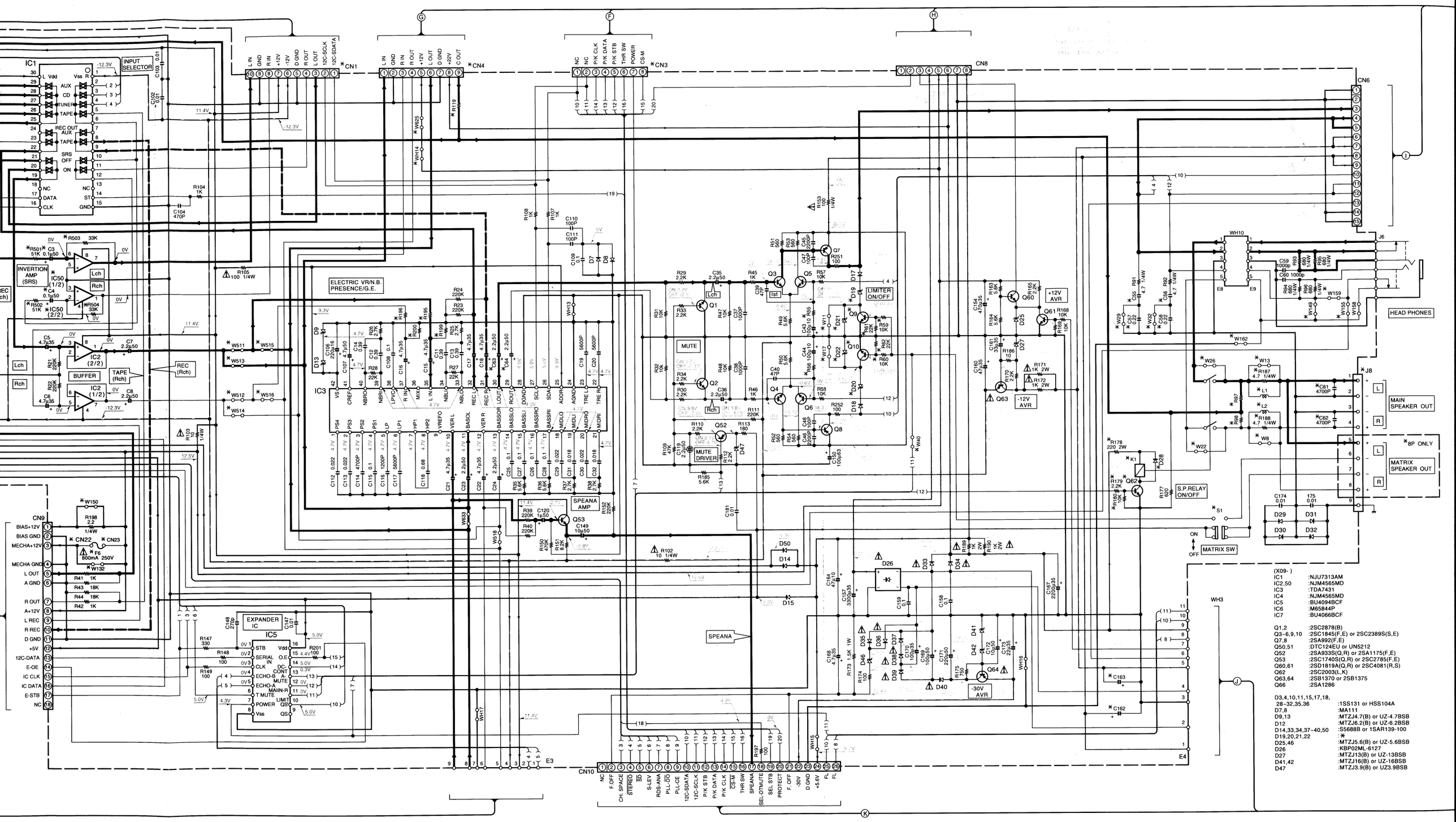

(X09-)

IC1	:NJU7313AM
IC2,50	:NJM4565MD
IC3	:TDA7431
IC4	:NJM4565MD
IC5	:BU4094BCF
IC6	:M65844P
IC7	:BU4066BCF
Q1,2	:2SC2878(B)
Q3~6,9,10	:2SC1845(F,E) or 2SC2389S(S,E)
Q7,8	:2SA992(F,E)
Q50,51	:DTC124EU or UN5212
Q52	:2SA933S(Q,R) or 2SA1175(F,E)
Q53	:2SC1740S(Q,R) or 2SC2785(F,E)
Q60,61	:2SD1819A(Q,R) or 2SC4081(R,S)
Q62	:2SC2003(L,K)
Q63,64	:2SB1370 or 2SB1375
Q66	:2SA1286
D3,4,10,11,15,17,18, 28~32,35,36	:1SS131 or HSS104A
D7,8	:MA111
D9,13	:MTZJ4.7(B) or UZ-4.7BSB
D12	:MTZJ6.2(B) or UZ-6.2BSB
D14,33,34,37~40,50	:SS688B or 1SAR139-100
D19,20,21,22	:*
D25,46	:MTZJ5.6(B) or UZ-5.6BSB
D26	:KBP02ML-6127
D27	:MTZJ13(B) or UZ-13BSB
D41,42	:MTZJ16(B) or UZ-16BSB
D47	:MTZJ3.9(B) or UZ3.9BSB

edance type
s as shown in
he measuring
actual reading

MODE	CARRIER	MODULATION		ANT INPUT
		FREQUENCY	DEVIATION	
FM	98MHz	1kHz	STEREO 67.5kHz 7.5kHz(Pilot)	60dB
AM	1000(999)kHz	400Hz	MONO 30% MOD	60dB

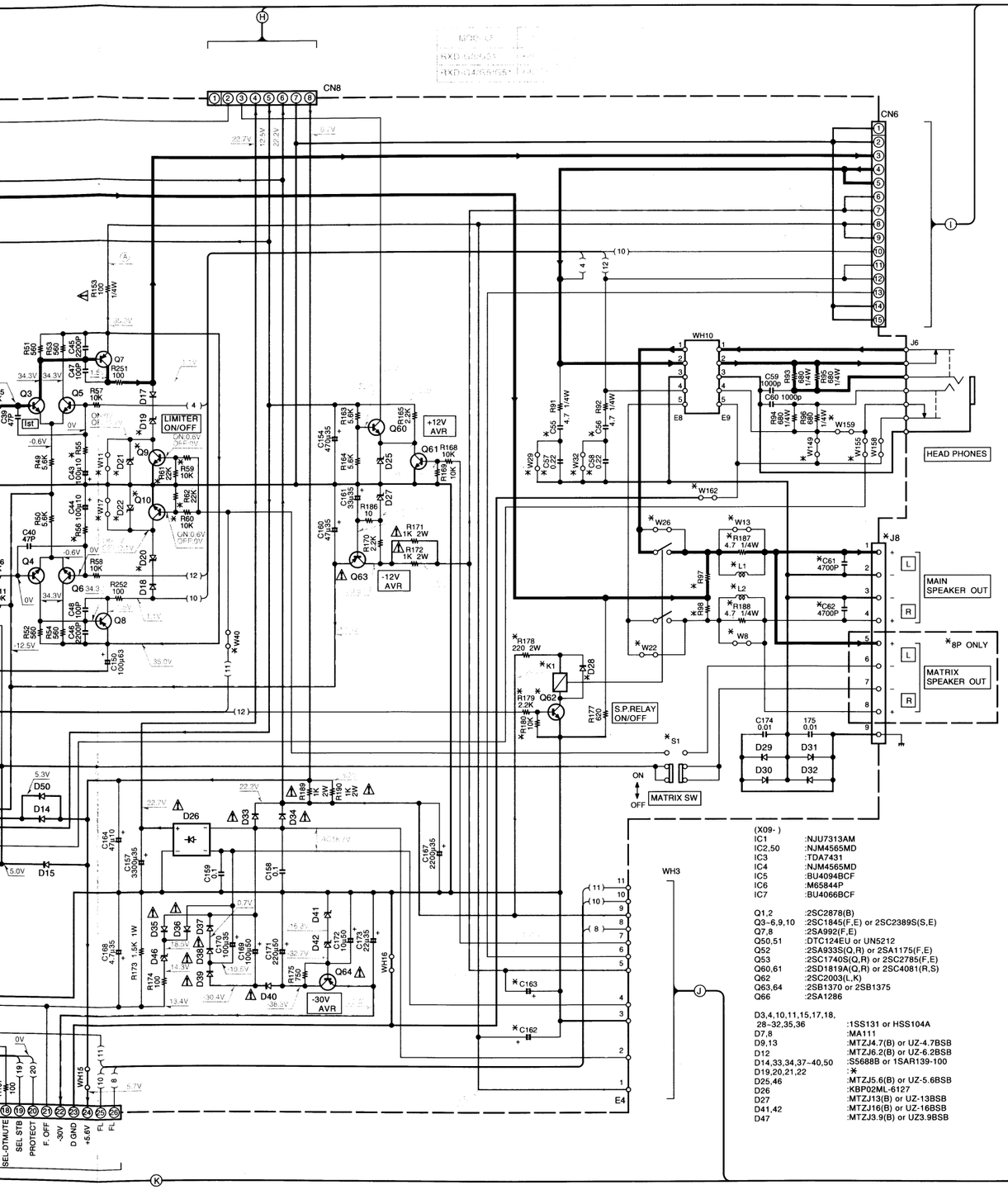

(X09-)

IC1	:NJU7313AM
IC2,50	:NJM4565MD
IC3	:TDA7431
IC4	:NJM4565MD
IC5	:BU4094BCF
IC6	:M65844P
IC7	:BU4066BCF
Q1,2	:2SC2878(B)
Q3-6,9,10	:2SC1845(F,E) or 2SC2389S(S,E)
Q7,8	:2SA992(F,E)
Q50,51	:DTC124EU or UN5212
Q52	:2SA933S(Q,R) or 2SA1175(F,E)
Q53	:2SC1740S(Q,R) or 2SC2785(F,E)
Q60,61	:2SD1819A(Q,R) or 2SC4081(R,S)
Q62	:2SC2003(L,K)
Q63,64	:2SB1370 or 2SB1375
Q66	:2SA1286
D3,4,10,11,15,17,18, 28-32,35,36	:1SS131 or HSS104A
D7,8	:MA111
D9,13	:MTZJ4.7(B) or UZ-4.7BSB
D12	:MTZJ6.2(B) or UZ-6.2BSB
D14,33,34,37-40,50	:S5688B or 1SAR139-100
D19,20,21,22	:✱
D25,46	:MTZJ5.6(B) or UZ-5.6BSB
D26	:KBP02ML-6127
D27	:MTZJ13(B) or UZ-13BSB
D41,42	:MTZJ16(B) or UZ-16BSB
D47	:MTZJ3.9(B) or UZ3.9BSB

DESTINATION
CCUNTRY	ABB.
U.S.A.	K
CANADA	P
PX	Y
GENERAL MARKET	M
MALAYSIA	I
CHAINA	C
AUSTRALIA	X
EUROPE	E
J.K.	T

RECORDING LINE
SIGNAL LINE
GND LINE
+B LINE
-B LINE

RXD-G3 (X09-431X-XX)

DESTINATION	UNIT No.	Ⓐ	IC50	Q9,10	Q62	D19,20	D21,22, 28	C1,2	C3,4	C55, 56	C57, 58	C61, 62	C63, 64	C162, 163	R1-4	R55, 56	R59-62	R97, 98	R106,119,178-180, 501-504	R187, 188	R195, 196
K	0-11	NO	NO	NO	NO	MTZJ30(B) or UZ-30BS	NO	NO	NO	0.1	NO	NO	2.2μ 50	4700μ 56	33K	39	NO	8.2K	NO	NO	100
P																					
Y	0-21			YES		MTZJ15(B) or UZ-15BSB				0.22	YES	YES		3300μ 50		43	YES	6.2K		YES	
M								6P													
X	0-71																				
E	2-71																				
T	0-51																				

DESTINATION	UNIT No.	R198	R199, 200	CN1, 3,4	CN22, 23	K1	S1	J8	L1,2	F6	W8, 13	W11, 17	W22,26,158, 159,511,512	W29, 32	W39,132, 150	W40,76,79,82,106,111,115,144,149,155,162, 173,175,513-516,611,612,614,616,618	WH14
K	0-11	YES	220K	NO	YES	NO	NO	4P	YES	YES	YES	YES	YES	YES	NO	NO	NO
P																	
Y	0-21	NO			NO	NO	YES	8P	NO	YES	NO	NO		NO	YES		
M																	
X	0-71																
E	2-71								YES	NO							
T	0-51																

RXD-G4 (X09-432X-XX)

DESTINATION	UNIT No.	Ⓐ	IC50	Q9,10	Q62	D19,20	D21, 22	D28	C1,2	C3,4	C55, 56	C57, 58	C61, 62	C63, 64	C162, 163	R1,2	R3,4	R55, 56	R59-62	R97, 98	R106, 119,178-180	R187, 188	R195, 196	R198
K	0-11	NO	YES	NO	NO	MTZJ24(B) or UZ-24BS	YES	NO	NO	YES	0.1	NO	NO	3.3μ 50	5600μ 63	33K	120K	33	NO	10K	NO	NO	100	YES
P																								
Y	0-21			YES		MTZJ18(B) or UZ-18BSB									4700μ 63			39	YES	8.2K				NO
M																								
I																								
C	3-01																							
X	0-71																							
E	2-71							6P			0.22	YES	YES									YES		
T	0-51																							

DESTINATION	UNIT No.	R199, 200	R501-504	CN1	CN3, 4	CN22, 23	K1	S1	J8	L1,2	F6	W8, 13	W11,17,40,106,149,155, 162,173,175,513-516	W22,26,76,79,82,111,115,144,158, 159,511,512,611,612,614,616,618	W29, 32	W39, 132,150	WH14
K	0-11	220K	YES	YES	NO	YES	NO	NO	4P		YES	YES	NO	YES	YES	NO	NO
P																	
Y	0-21					NO		YES	8P	NO		NO				YES	
M																	
I																	
C	3-01																
X	0-71											NO					
E	2-71										YES				NO		
T	0-51																

RXD-G5 (X09-445X-XX)

DESTINATION	UNIT No.	Ⓐ	IC50	Q9,10, 62	D19,20	D21, 22	D28	C1,2	C3,4	C55, 56	C57, 58	C61, 62	C63, 64	C162, 163	R1,2	R3,4	R55, 56	R59-62,106, 178-180,501-504	R97, 98	R119	R187, 188	R195, 196
K	0-10	NO	YES	YES	MTZJ24(B) or UZ-24BS	YES	YES	NO	YES	0.1	NO	NO	3.3μ 50	5600μ 63	470	220K	33	YES	10K	8.2K	NO	8.2K
P																						
Y	0-21					NO								4700μ 63			39		8.2K	7.5K		
M																						
I																						
C	3-01																					
X	0-71																					
E	2-71									0.22	YES	YES										YES
T	0-51							470P														

DESTINATION	UNIT No.	R198	R199, 200	CN1, 3,4	CN22, 23	K1	S1	J8	L1,2	F6	W8, 13	W11,17,22,26,39, 158,159,511,512	W29, 32	W40,76,79,82,106,111,115,144,149,155,162, 173,175,513-516,611,612,614,616,618	W132, 150	WH14
K	0-10	YES	10K	YES	YES	YES	NO	4P	NO	YES	YES	NO	YES	YES	NO	YES
P																
Y	0-21	NO			NO					NO					YES	
M																
I																
C	3-01															
X	0-71															
E	2-71									YES		NO		NO		
T	0-51															

RXD-G31 (X09-432X-XX)

DESTINATION	UNIT No.	Ⓐ	IC50	Q9,10	Q62	D19,20	D21,22, 28	C1-4	C55, 56	C57,58 61,62	C63, 64	C162, 163	R1-4	R55, 56	R59-62	R97, 98	R106,178-180,119, 187,188,198,501-504
M	0-23	YES	NO	YES	NO	MTZJ15(B) or UZ-15BSB	NO	NO	0.1	NO	2.2μ 50	3300μ 50	33K	43	YES	6.2K	NO
I																	
C	3-02																

DESTINATION	UNIT No.	R195, 196	R199, 200	CN1,3,4, 22,23	K1	S1	J8	L1,2	F6	W8,13,22,26,29,32,39, 132,150,158,159,511,512	W11,17,40,76,79,82,106,111,115,144,149,155, 162,173,175,513-516,611,612,614,616,618	WH14
M	0-23	100	220K	NO	NO	YES	8P	NO	NO	YES	NO	NO
I												
C	3-02											

RXD-G51 (X09-445X-XX)

DESTINATION	UNIT No.	Ⓐ	IC50	Q9,10	Q62	D19,20	D21,22, 28	C1,2,57, 58,61,62	C3,4	C55, 56	C63, 64	C162, 163	R1,2	R3,4	R55, 56	R59-62, 501-504	R97, 98	R106,119,178-180, 187,188,198
M	0-23	YES	YES	YES	NO	MTZJ16(B) or UZ-16BSB	NO	NO	YES	0.1	3.3μ 50	4700μ 63	33K	120K	39	YES	8.2K	NO
I																		
C	3-03																	

DESTINATION	UNIT No.	R195, 196	R199, 200	CN1	CN3,4, 22,23	K1	S1	J8	L1,2	F6	W8,13,22,26,29,32,39,76,79,82,111,115,132, 132,150,158,159,511,512,611,612,614,616,618	W11,17,40,106,144,149, 155,162,173,175,513-516	WH14
M	0-23	100	220K	YES	NO	NO	YES	8P	NO	NO	YES	NO	NO
I													
C	3-03												

X08-A/2 -WH2 5/6 Ⓕ
X08-A/2 -WH1 5/6 Ⓖ
X09-B/8 -CN7 5/6 Ⓗ
X09-B/8 -CN5 5/6 Ⓘ
X09-E/8 -WH3 5/6 Ⓙ
X14-A/2 -CN1 6/6 Ⓚ

RXD-G3/G4/G5/G31/G51(K)(4/6)

Y39-2300-00

RXD-G3/G4/G5/G31/G51

KENWOOD

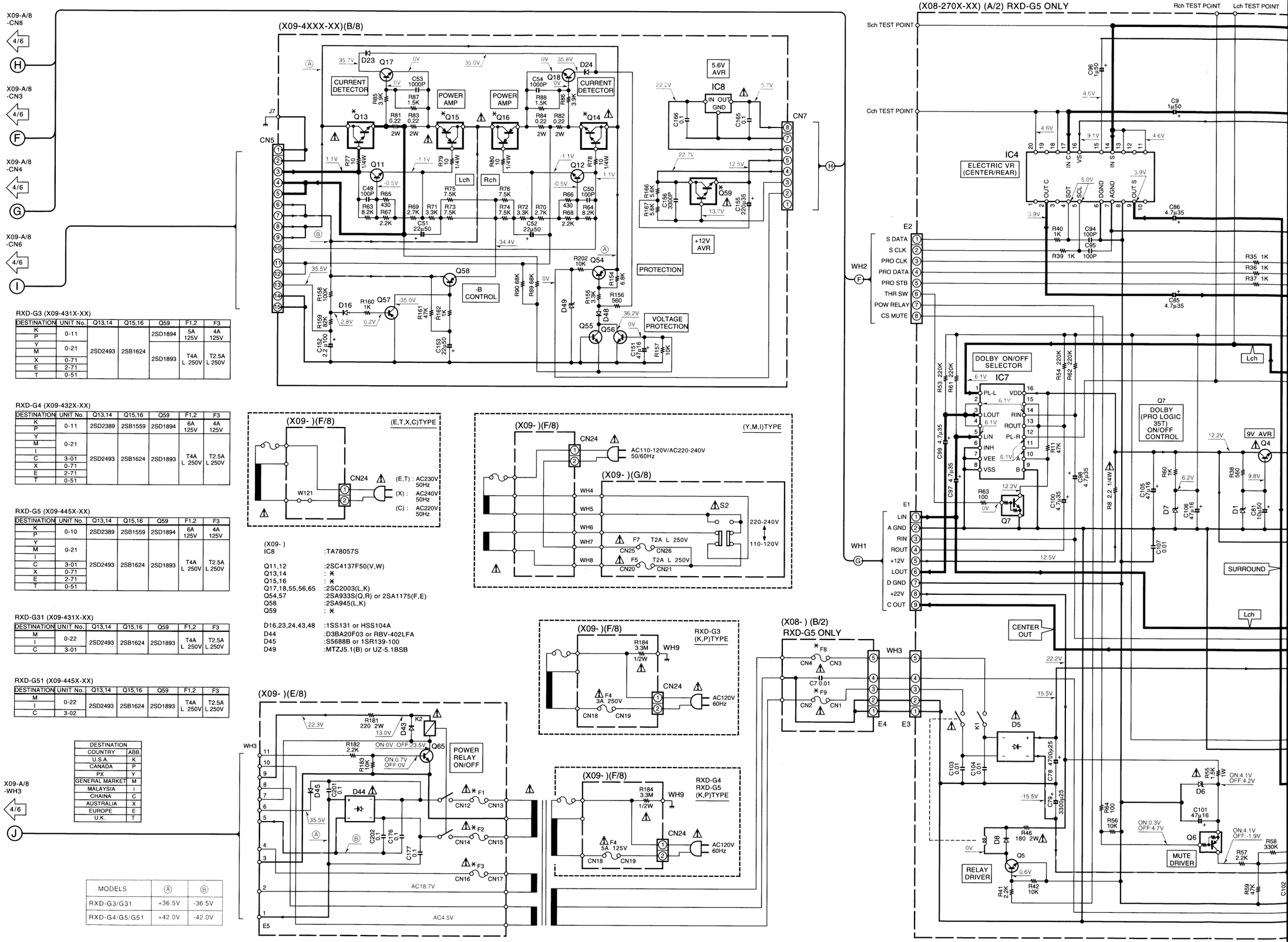

RXD-G3 (X09-431X-XX)

DESTINATION	UNIT No.	Q13,14	Q15,16	Q59	F1,2	F3
K	0-11	2SD2493	2SB1624	2SD1894	5A 125V	4A 125V
P						
Y	0-21			2SD1893	T4A L 250V	T2.5A L 250V
M						
X	0-71					
E	2-71					
T	0-51					

RXD-G4 (X09-432X-XX)

DESTINATION	UNIT No.	Q13,14	Q15,16	Q59	F1,2	F3
K	0-11	2SD2389	2SB1559	2SD1894	6A 125V	4A 125V
P						
Y	0-21	2SD2493	2SB1624	2SD1893	T4A L 250V	T2.5A L 250V
M						
I						
C	3-01					
X	0-71					
E	2-71					
T	0-51					

RXD-G5 (X09-445X-XX)

DESTINATION	UNIT No.	Q13,14	Q15,16	Q59	F1,2	F3
K	0-10	2SD2389	2SB1559	2SD1894	6A 125V	4A 125V
P						
Y	0-21	2SD2493	2SB1624	2SD1893	T4A L 250V	T2.5A L 250V
M						
I						
C	3-01					
X	0-71					
E	2-71					
T	0-51					

RXD-G31 (X09-431X-XX)

DESTINATION	UNIT No.	Q13,14	Q15,16	Q59	F1,2	F3
M	0-22	2SD2493	2SB1624	2SD1893	T4A L 250V	T2.5A L 250V
I						
C	3-01					

RXD-G51 (X09-445X-XX)

DESTINATION	UNIT No.	Q13,14	Q15,16	Q59	F1,2	F3
M	0-22	2SD2493	2SB1624	2SD1893	T4A L 250V	T2.5A L 250V
I						
C	3-02					

(X09-)
IC8 :TA78057S

Q11,12 :2SC4137F50(V,W)
Q13,14 : ✱
Q15,16 : ✱
Q17,18,55,56,65 :2SC2003(L,K)
Q54,57 :2SA933S(Q,R) or 2SA1175(F,E)
Q58 :2SA945(L,K)
Q59 : ✱

D16,23,24,43,48 :1SS131 or HSS104A
D44 :D3BA20F03 or RBV-402LFA
D45 :S5688B or 1SR139-100
D49 :MTZJ5.1(B) or UZ-5.1BSB

DESTINATION	
COUNTRY	ABB.
U.S.A.	K
CANADA	P
PX	Y
GENERAL MARKET	M
MALAYSIA	I
CHAINA	C
AUSTRALIA	X
EUROPE	E
U.K.	T

MODELS	Ⓐ	Ⓑ
RXD-G3/G31	+36.5V	-36.5V
RXD-G4/G5/G51	+42.0V	-42.0V

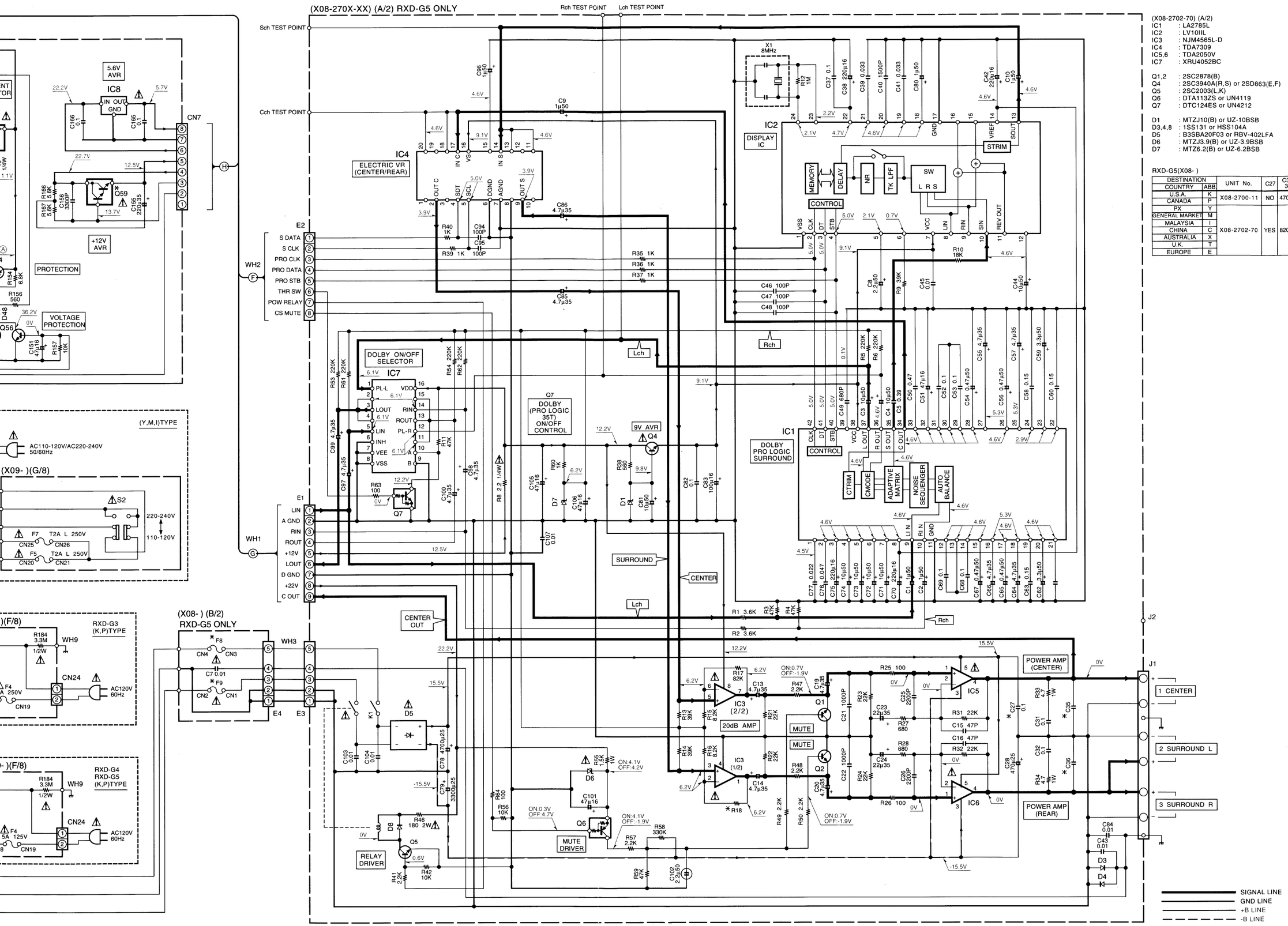

RXD-G3/G4/G5/G31/G51(K)(5/6)

(X08-2702-70) (A/2)

IC1	: LA2785L
IC2	: LV10IIL
IC3	: NJM4565L-D
IC4	: TDA7309
IC5,6	: TDA2050V
IC7	: XRU4052BC
Q1,2	: 2SC2878(B)
Q4	: 2SC3940A(R,S) or 2SD863(E,F)
Q5	: 2SC2003(L,K)
Q6	: DTA113ZS or UN4119
Q7	: DTC124ES or UN4212
D1	: MTZJ10(B) or UZ-10BSB
D3,4,8	: 1SS131 or HSS104A
D5	: B3SBA20F03 or RBV-402LFA
D6	: MTZJ3.9(B) or UZ-3.9BSB
D7	: MTZ6.2(B) or UZ-6.2BSB

RXD-G5(X08-)

DESTINATION		UNIT No.	C27	C35, 36	R18	F8,9
COUNTRY	ABB					
U.S.A.	K	X08-2700-11	NO	4700P	75K	4A 125V
CANADA	P					
PX	Y	X08-2702-70	YES	8200P	68K	T4A L 250V
GENERAL MARKET	M					
MALAYSIA	I					
CHINA	C					
AUSTRALIA	X					
U.K.	T					
EUROPE	E					

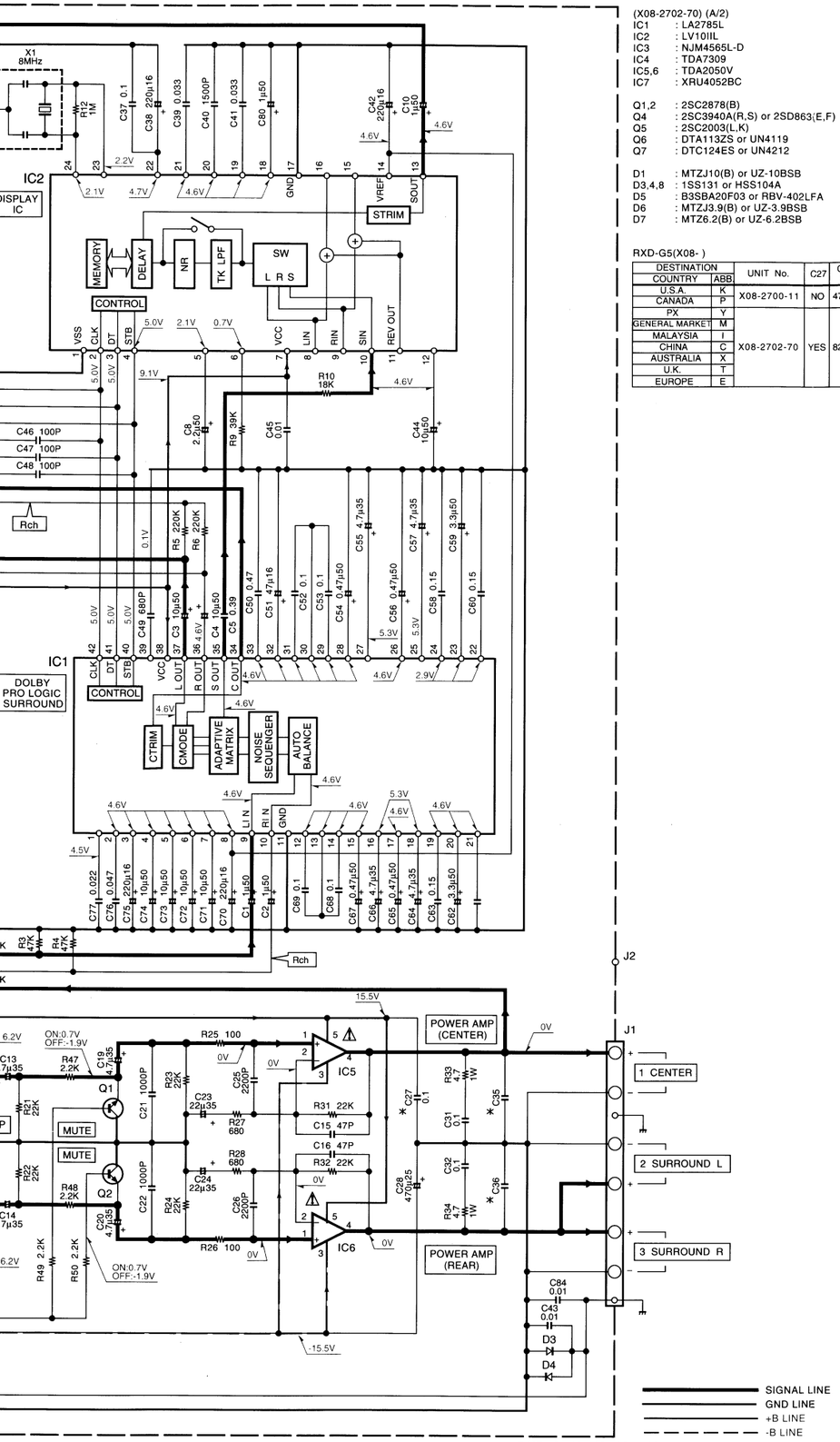

RXD-G3/G4/G5/G31/G51(K)(5/6)

(X08-2702-70) (A/2)
IC1 : LA2785L
IC2 : LV10IIL
IC3 : NJM4565L-D
IC4 : TDA7309
IC5,6 : TDA2050V
IC7 : XRU4052BC

Q1,2 : 2SC2878(B)
Q4 : 2SC3940A(R,S) or 2SD863(E,F)
Q5 : 2SC2003(L,K)
Q6 : DTA113ZS or UN4119
Q7 : DTC124ES or UN4212

D1 : MTZJ10(B) or UZ-10BSB
D3,4,8 : 1SS131 or HSS104A
D5 : B3SBA20F03 or RBV-402LFA
D6 : MTZJ3.9(B) or UZ-3.9BSB
D7 : MTZ6.2(B) or UZ-6.2BSB

RXD-G5(X08-)

DESTINATION		UNIT No.	C27	C35, 36	R18	F8,9
COUNTRY	ABB.					
U.S.A.	K	X08-2700-11	NO	4700P	75K	4A 125V
CANADA	P					
PX	Y	X08-2702-70	YES	8200P	68K	T4A L 250V
GENERAL MARKET	M					
MALAYSIA	I					
CHINA	C					
AUSTRALIA	X					
U.K.	T					
EUROPE	E					

CAUTION: *For continued safety, replace safety critical components only with manufacturer's recommended parts (refer to parts list). ⚠ indicates safety critical components. For continued protection against risk of fire, replace only with same type and rating fuse(s). To reduce the risk of electric shock, leakage-current or resistance measurements shall be carried out (exposed parts are acceptably insulated from the supply circuit) before the appliance is returned to the customer.*

The DC voltage is an actual reading measured with a high impedance type voltmeter with a cassette loaded at playback mode. The measurement value may vary depending on the measuring instruments used or on the product. Bias circuit DC voltage is measured while in the record mode.

DOLBY and the double-D symbol are trademarks of Dolby Laboratories Licensing Corporation. Noise reduction circuit made under license from Dolby Laboratories Licensing Corporation.

NJM4565L-D

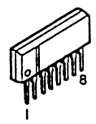

LV1011L

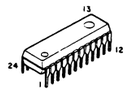

M5237L

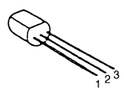

NJU3718L

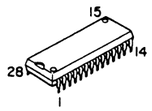

HA12182F

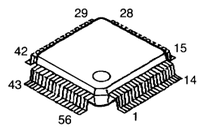

LA6537

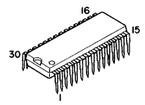

M65844P

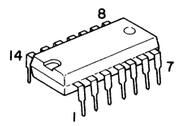

Y39-2300-00

RXD-G3/G4/G5/G31/G51

KENWOOD

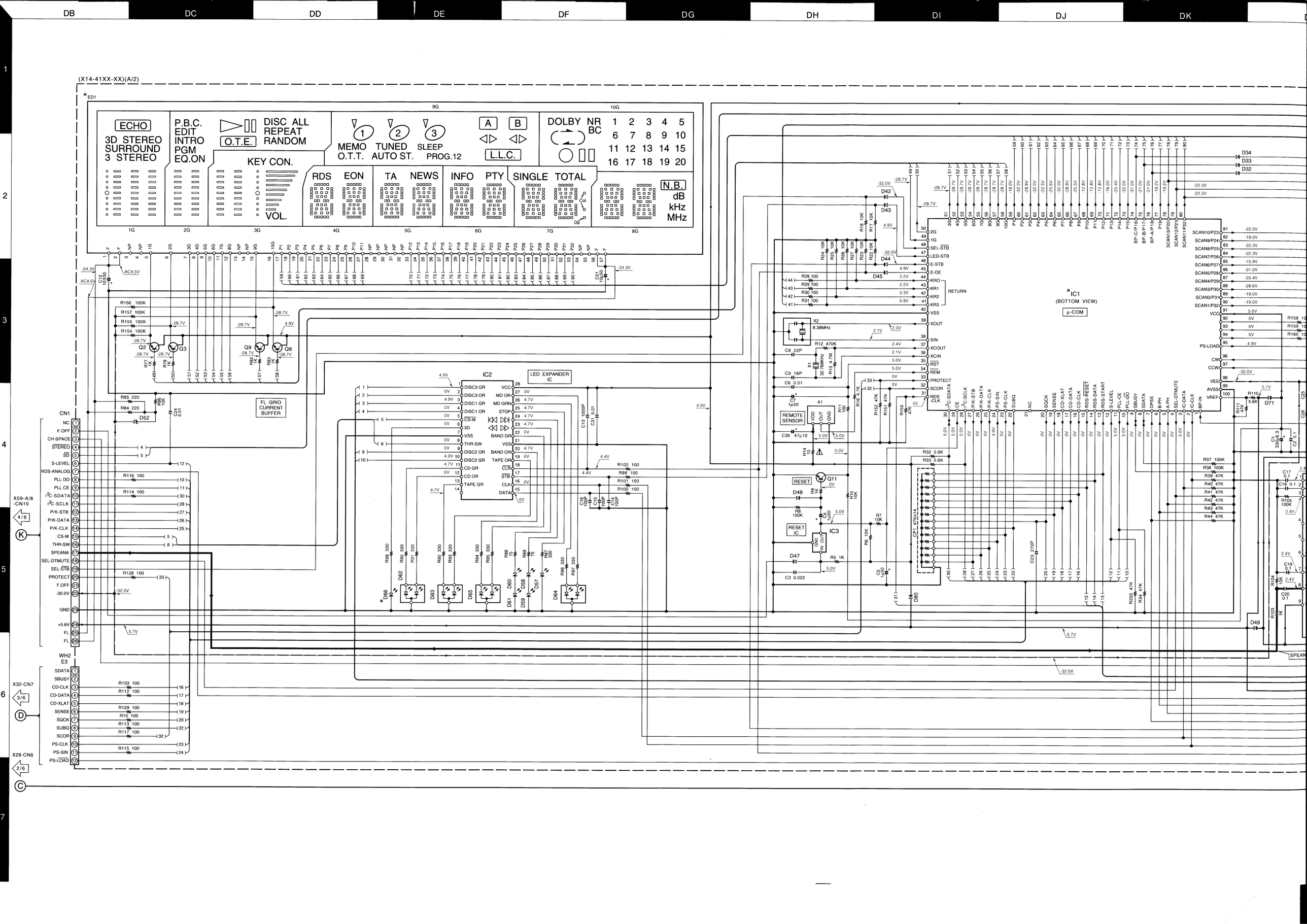
DB
DC
DD
DE
DF
DG
DH
DI
DJ
DK
(X14-41XX-XX)(A/2)
ECHO
3D STEREO
SURROUND
3 STEREO
P.B.C.
EDIT
INTRO
PGM
EQ.ON
O.T.E.
DISC ALL
REPEAT
RANDOM
KEY CON.
VOL.
MEMO
O.T.T.
TUNED
AUTO ST.
SLEEP
PROG.12
L.L.C.
DOLBY NR
BC
RDS
EON
TA
NEWS
INFO
PTY
SINGLE
TOTAL
N.B.
dB
kHz
MHz
FL GRIO
CURRENT
BUFFER
LED EXPANDER
IC
IC2
IC1
(BOTTOM VIEW)
μ-COM
REMOTE
SENSOR
RESET
RESET
IC
IC3
CN1
WH2
E3
X09-A/8
-CN10
X32-CN7
X28-CN6
SPEAN

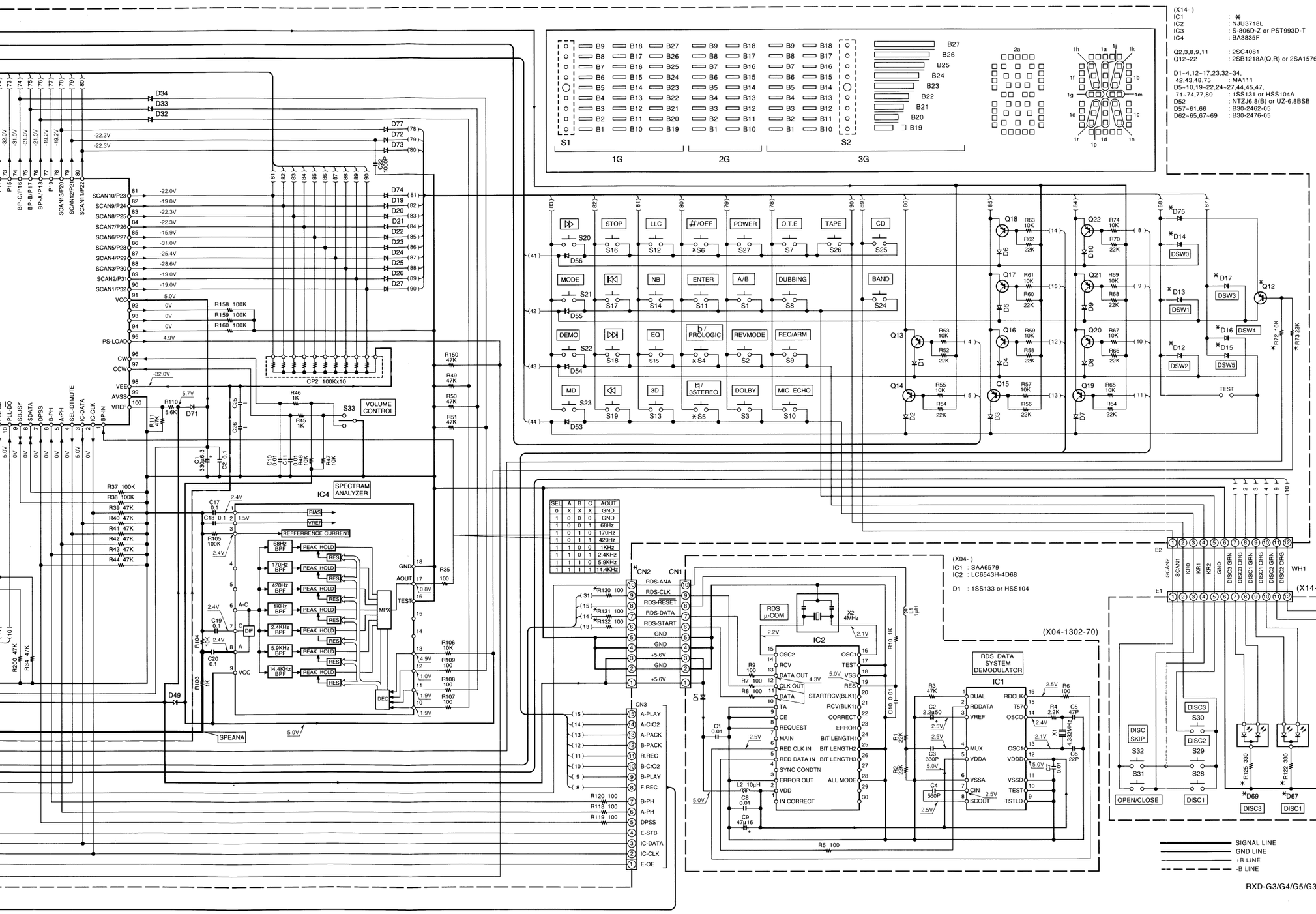

SEL	A	B	C	AOUT
0	X	X	X	GND
1	0	0	0	GND
1	0	0	1	68Hz
1	0	1	0	170Hz
1	0	1	1	420Hz
1	1	0	0	1KHz
1	1	0	1	2.4KHz
1	1	1	0	5.9KHz
1	1	1	1	14.4KHz

(X14-)

IC1	: *
IC2	: NJU3718L
IC3	: S-806D-Z or PST993D-T
IC4	: BA3835F
Q2,3,8,9,11	: 2SC4081
Q12-22	: 2SB1218A(Q,R) or 2SA1576A(R,S)
D1-4,12-17,23,32-34, 42,43,48,75	: MA111
D5-10,19-22,24-27,44,45,47, 71-74,77,80	: 1SS131 or HSS104A
D52	: NTZJ6.8(B) or UZ-6.8BSB
D57-61,66	: B30-2462-05
D62-65,67-69	: B30-2476-05

(X04-)
IC1 : SAA6579
IC2 : LC6543H-4D68
D1 : 1SS133 or HSS104

(X04-1302-70)

RDS DATA SYSTEM DEMODULATOR

RDS μ-COM

SIGNAL LINE
GND LINE
+B LINE
-B LINE

RXD-G3/G4/G5/G31/G51(K)(6/6)

RXD-G3 (X14-410X-XX)

DESTINATION	UNIT No.	IC1	Q12	D12	D13	D14	D15-17, 67-69
K	0-11	M38198MC-069-FP	NO	NO	NO	NO	NO
P							
Y							
M	0-21		YES			YES	
I							
C							
X	0-71		NO	NO	YES	YES	
T	0-51			YES		NO	
E	2-71			NO		YES	

DESTINATION	UNIT No.	D75	S4-6	ED1	CN2	R72, 73	R122,124,125, 130-132
K	0-11	NO	NO	BJ428GK	NO	NO	NO
P							
Y							
M	0-21	YES				YES	
I							
C							
X	0-71	NO				NO	
T	0-51						
E	2-71						

RXD-G4 (X14-411X-XX)

DESTINATION	UNIT No.	IC1	Q12	D12	D13	D14	D15	D16,17 67-69
K	0-11	M38198MC-069-FP	NO	NO	NO	NO	NO	YES
P								
Y								
M	0-21		YES			YES		
I								
C								
X	0-71	M38199MF-051FP	NO		YES	NO		
T	0-51							
E	2-71				NO	YES		

DESTINATION	UNIT No.	D75	S4-6	ED1	CN2	R72, 73	R122,124, 125	R130-132
K	0-11	NO	NO	FIP10FMW6R	NO	NO	YES	NO
P								
Y								
M	0-21	YES				YES		
I								
C								
X	0-71	NO				NO		
T	0-51				YES			YES
E	2-71							

RXD-G5 (X14-411X-XX)

DESTINATION	UNIT No.	IC1	Q12	D12	D13	D14	D15	D16,17 67-69
K	0-12	M38198MC-069-FP	NO	NO	NO	NO	NO	YES
P								
Y								
M	0-22		YES			YES		
I								
C								
X	0-72	M38199MF-051FP	NO		YES	NO		
T	0-52							
E	2-72				NO	YES		

DESTINATION	UNIT No.	D75	S4-6	ED1	CN2	R72, 73	R122,124, 125	R130-132
K	0-12	NO	NO	FIP10FMW6R	NO	NO	YES	NO
P								
Y								
M	0-22	YES				YES		
I								
C								
X	0-72	NO				NO		
T	0-52				YES			YES
E	2-72							

RXD-G31 (X14-4100-22)

DESTINATION	UNIT No.	IC1	Q12	D12,13,15, 16,67-69	D14,17, 75
M	0-22	M38198MC-069-FP	YES	NO	YES
I					
C					

DESTINATION ABB.	UNIT No.	S4-6	ED1	CN2	R72, 73	R122,124,125, 130-132
M	0-22	NO	BJ428GK	NO	YES	NO
I						
C						

RXD-G51 (X14-4110-23)

DESTINATION	UNIT No.	IC1	Q12	D12,13, 16	D14,15,17, 67-69,75
M	0-23	M38198MC-069-FP	YES	NO	YES
I					
C					

DESTINATION ABB.	UNIT No.	S4-6	ED1	CN2	R72,73,122, 124,125	R130-132
M	0-23	NO	FIP10FMW6R	NO	YES	NO
I						
C						

DESTINATION	
COUNTRY	ABB.
U.S.A.	K
CANADA	P
PX	Y
GENERAL MARKET	M
MALAYSIA	I
CHINA	C
AUSTRALIA	X
U.K.	T
EUROPE	E

CAUTION: F
components o
(refer to parts
For continued
with same typ
electric shock,
shall be carrie
from the supp
the customer.

The DC voltag
impedance t
measurement
instruments us

Y39-2300-00

RXD-G

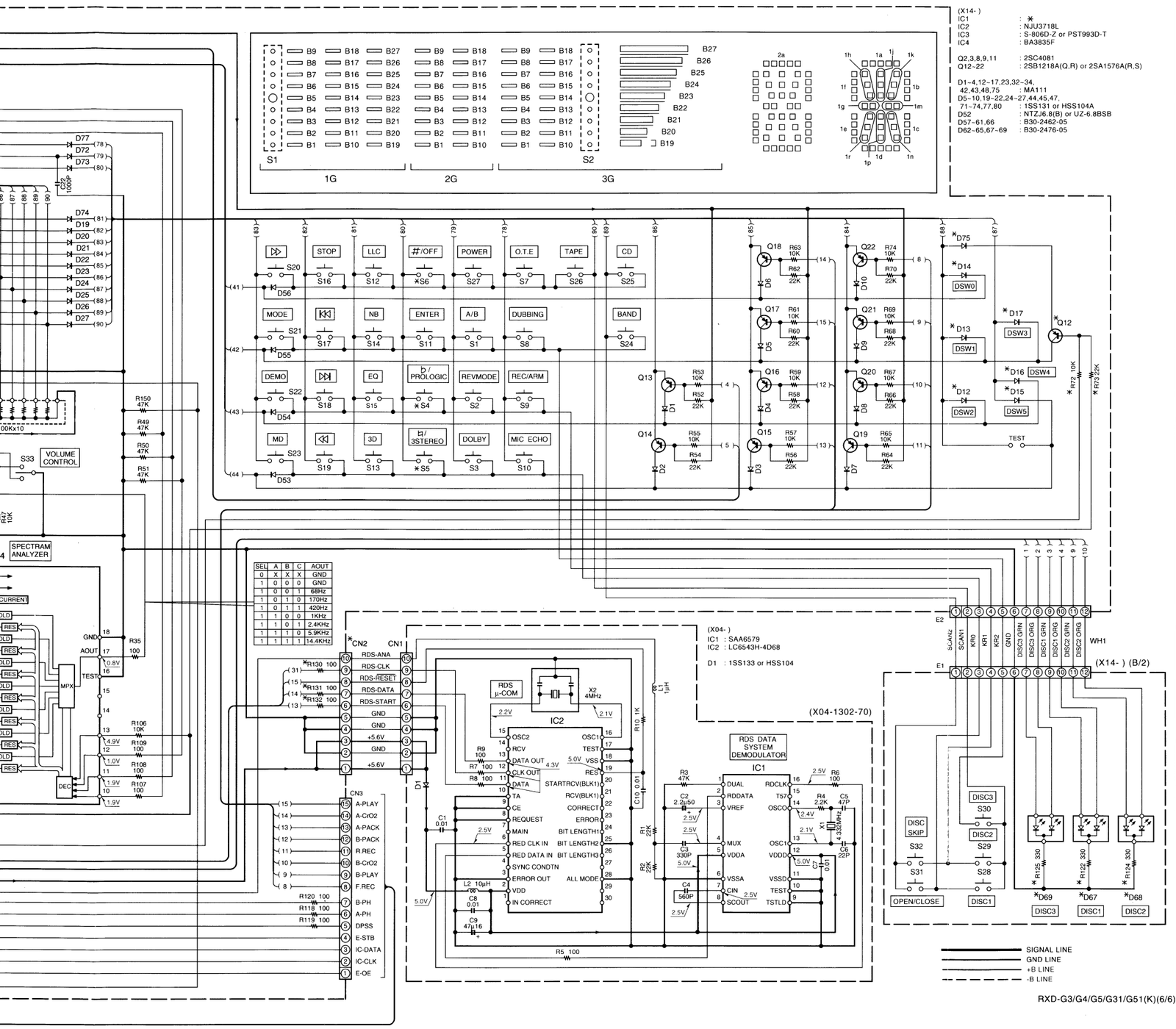

(X14-)

IC1	: *
IC2	: NJU3718L
IC3	: S-806D-Z or PST993D-T
IC4	: BA3835F
Q2,3,8,9,11	: 2SC4081
Q12-22	: 2SB1218A(Q,R) or 2SA1576A(R,S)
D1-4,12-17,23,32-34, 42,43,48,75	: MA111
D5-10,19-22,24-27,44,45,47, 71-74,77,80	: 1SS131 or HSS104A
D52	: NTZJ6.8(B) or UZ-6.8BSB
D57-61,66	: B30-2462-05
D62-65,67-69	: B30-2476-05

SEL	A	B	C	AOUT
0	X	X	X	GND
1	0	0	0	GND
1	0	0	1	68Hz
1	0	1	0	170Hz
1	0	1	1	420Hz
1	1	0	0	1KHz
1	1	0	1	2.4KHz
1	1	1	0	5.9KHz
1	1	1	1	14.4KHz

(X04-)

IC1	: SAA6579
IC2	: LC6543H-4D68
D1	: 1SS133 or HSS104

RXD-G3 (X14-410X-XX)

DESTINATION	UNIT No.	IC1	Q12	D12	D13	D14	D15-17, 67-69
K	0-11	M38198MC-069-FP	NO	NO	NO	NO	NO
P							
Y	0-21		YES			YES	
M							
I							
C							
X	0-71		NO	YES	YES		
T	0-51		NO	YES		NO	
E	2-71			NO	YES		

DESTINATION	UNIT No.	D75	S4-6	ED1	CN2	R72, 73	R122,124,125, 130-132
K	0-11	NO	NO	BJ428GK	NO	NO	NO
P							
Y	0-21	YES				YES	
M							
I							
C							
X	0-71	NO				NO	
T	0-51						
E	2-71						

RXD-G4 (X14-411X-XX)

DESTINATION	UNIT No.	IC1	Q12	D12	D13	D14	D15	D16,17 67-69
K	0-11	M38198MC-069-FP	NO	NO	NO	NO	NO	YES
P								
Y	0-21		YES			YES		
M								
I								
C								
X	0-71	M38199MF-051FP	NO	YES	YES			
T	0-51					NO		
E	2-71			NO	YES			

DESTINATION	UNIT No.	D75	S4-6	ED1	CN2	R72, 73	R122,124, 125	R130-132
K	0-11	NO	NO	FIP10FMW6R	NO	NO	YES	NO
P								
Y	0-21	YES				YES		
M								
I								
C								
X	0-71	NO			YES	NO		YES
T	0-51							
E	2-71							

RXD-G5 (X14-411X-XX)

DESTINATION	UNIT No.	IC1	Q12	D12	D13	D14	D15	D16,17 67-69
K	0-12	M38198MC-069-FP	NO	NO	NO	NO	NO	YES
P								
Y	0-22		YES			YES		
M								
I								
C								
X	0-72	M38199MF-051FP	NO	YES	YES			
T	0-52					NO		
E	2-72			NO	YES			

DESTINATION	UNIT No.	D75	S4-6	ED1	CN2	R72, 73	R122,124, 125	R130-132
K	0-12	NO	NO	FIP10FMW6R	NO	NO	YES	NO
P								
Y	0-22	YES	YES			YES		
M								
I								
C								
X	0-72	NO			YES	NO		YES
T	0-52							
E	2-72							

RXD-G31 (X14-4100-22)

DESTINATION	UNIT No.	IC1	Q12	D12,13,15, 16,67-69	D14,17, 75
M	0-22	M38198MC-069-FP	YES	NO	YES
I					
C					

DESTINATION	UNIT No.	S4-6	ED1	CN2	R72, 73	R122,124,125, 130-132
ABB	0-22	NO	BJ428GK	NO	YES	NO
M						
I						
C						

RXD-G51 (X14-4110-23)

DESTINATION	UNIT No.	IC1	Q12	D12,13, 16	D14,15,17, 67-69,75
M	0-23	M38198MC-069-FP	YES	NO	YES
I					
C					

DESTINATION	UNIT No.	S4-6	ED1	CN2	R72,73,122, 124,125	R130-132
ABB.	0-23	NO	FIP10FMW6R	NO	YES	NO
M						
I						
C						

DESTINATION	
COUNTRY	ABB.
U.S.A.	K
CANADA	P
PX	Y
GENERAL MARKET	M
MALAYSIA	I
CHINA	C
AUSTRALIA	X
U.K.	T
EUROPE	E

RXD-G3/G4/G5/G31/G51(K)(6/6)

CAUTION: *For continued safety, replace safety critical components only with manufacturer's recommended parts (refer to parts list). ⚠ indicates safety critical components. For continued protection against risk of fire, replace only with same type and rating fuse(s). To reduce the risk of electric shock, leakage-current or resistance measurements shall be carried out (exposed parts are acceptably insulated from the supply circuit) before the appliance is returned to the customer.*

The DC voltage is an actual reading measured with a high impedance type voltmeter with no signal input. The measurement value may vary depending on the measuring instruments used or on the product.

Y39-2300-00

RXD-G3/G4/G5/G31/G51

KENWOOD

 RXD-G3/G4/G5/G31/G51

EXPLODED VIEW (CASSETTE DECK MECHANISM)

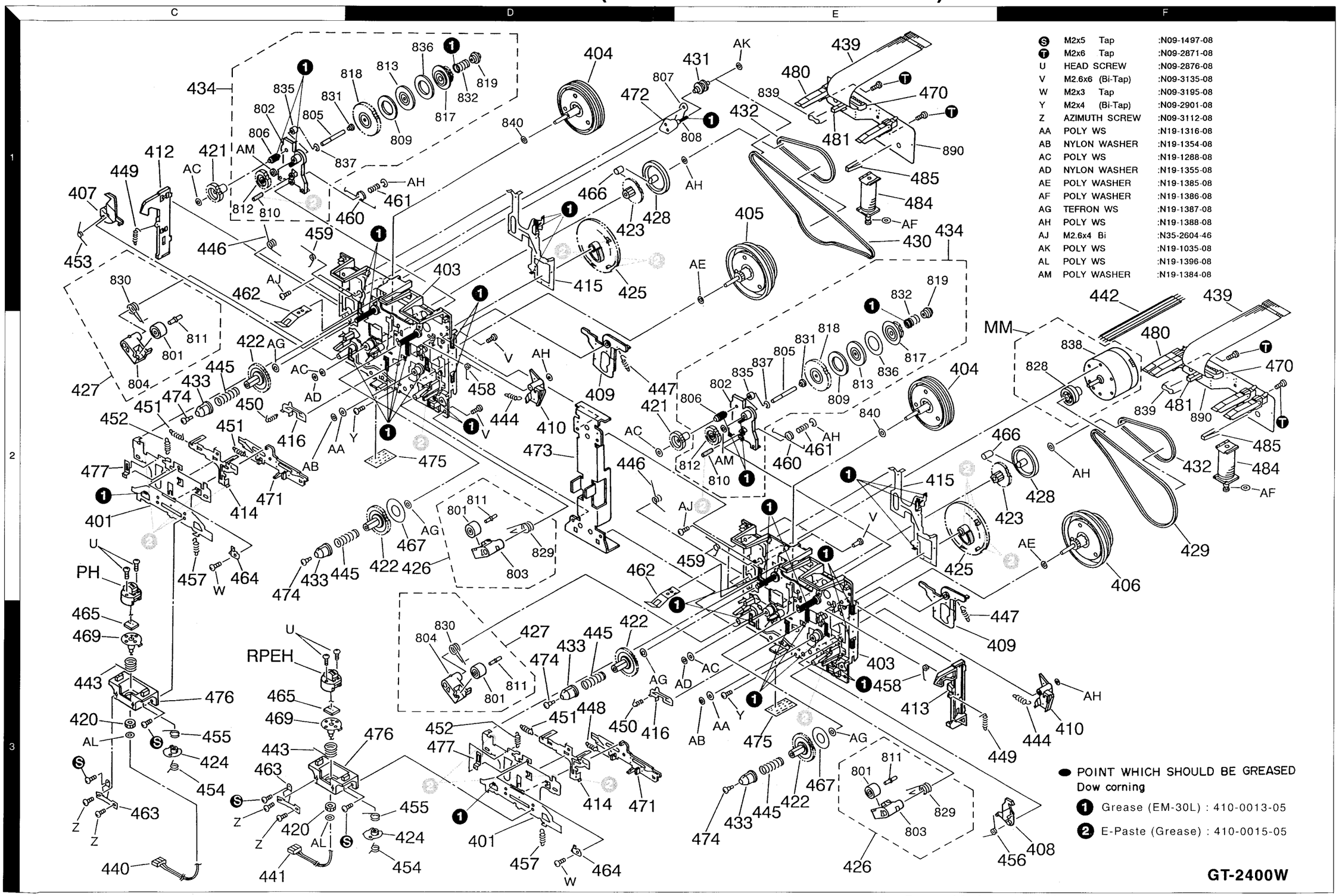

Parts with the exploded numbers larger than 700 are not supplied.

CASSETTE MECHANISM DESCRIPTION

How to drive the double cassette deck with one motor

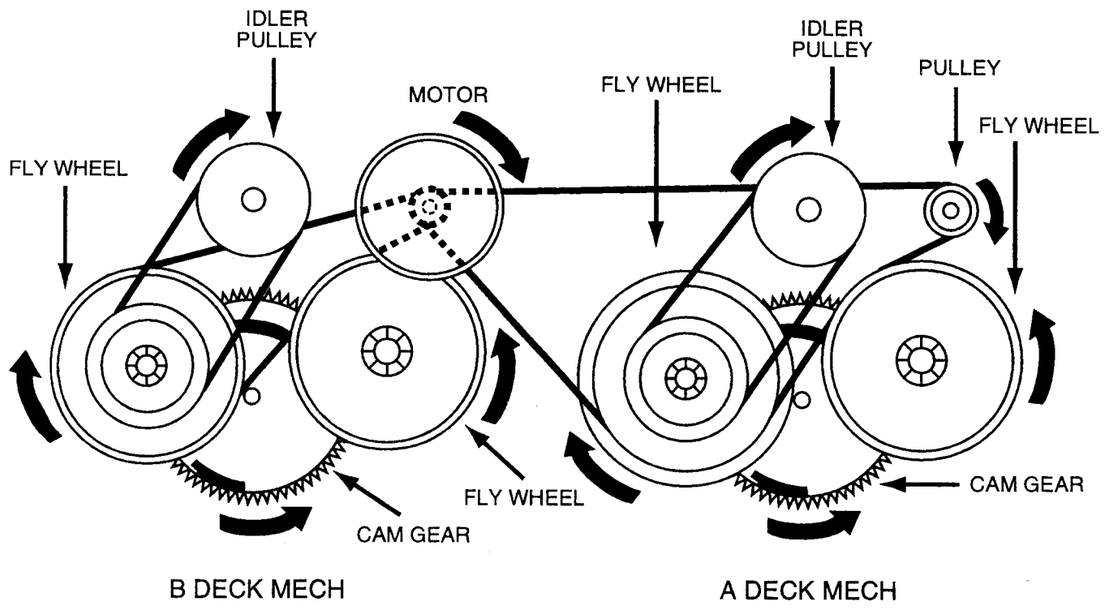

REAR VIEW

ONE MOTOR RVS MECH (GT-2400W)

EXPLODED VIEW (CD MECHANISM)

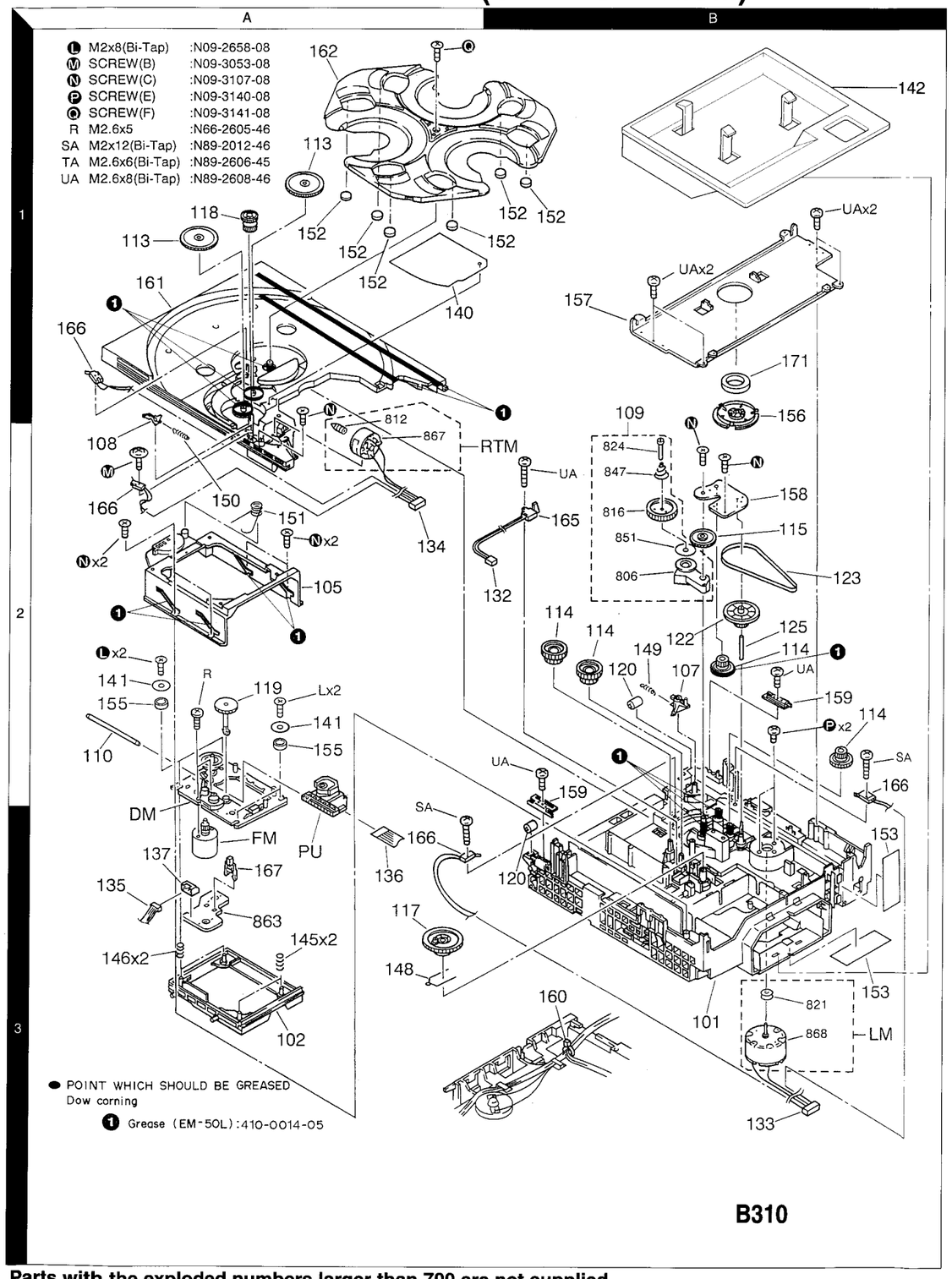

Parts with the exploded numbers larger than 700 are not supplied.

RXD-G3/G4/G5/G31/G51
PARTS LIST

∗ New Parts
Parts without **Parts No.** are not supplied.
Les articles non mentionnes dans le **Parts No.** ne sont pas fournis.
Teile ohne **Parts No.** werden nicht geliefert.

❶

Ref. No	Add-ress	New Parts	Parts No.	Description	Desti-nation	Re-marks
RXD-G3						
601	1H	∗	A01-3281-11	METALLIC CABINET		
603	2G	∗	A21-1886-12	DRESSING PANEL		
604	2G	∗	A29-0808-12	PANEL (TRAY)		
605	3G	∗	A53-1912-12	CASSETTE HOLDER(A MECHA)		
606	3G	∗	A53-1913-12	CASSETTE HOLDER(B MECHA)		
607	2H	∗	A60-0819-11	PANEL		
608	1G	∗	A70-1053-05	REMOTE CONTROLLER ASSY		
609	1G	∗	A09-0345-08	BATTERY COVER		
614	2G	∗	B10-2177-12	FRONT GLASS		
615	3G	∗	B10-2178-23	FRONT GLASS (LID-A)		
616	3G	∗	B10-2179-13	FRONT GLASS (LID-B)		
-			B46-0096-53	WARRANTY CARD	X	
-			B46-0121-33	WARRANTY CARD	P	
-		∗	B46-0307-23	WARRANTY CARD	KY	
-			B46-0310-03	WARRANTY CARD	TE	
-			B58-0513-04	CAUTION CARD (PRESET220-240)	Y	
-			B58-0964-13	CAUTION CARD	KY	
-		∗	B58-0965-13	CAUTION CARD	XT	
-		∗	B58-0966-13	CAUTION CARD	ME	
-		∗	B58-0967-03	CAUTION CARD	P	
-			B59-1104-00	SERVICE DIRECTORY	Y	
-		∗	B60-2573-00	INSTRUCTION MANUAL(ENGLISH)	KP	
-		∗	B60-2574-00	INSTRUCTION MANUAL(ENGLISH)	YMXT	
-		∗	B60-2575-00	INSTRUCTION MANUAL(FRENCH)	P	
-		∗	B60-2576-00	INSTRUCTION MANUAL(FRENCH)	E	
-		∗	B60-2577-00	INSTRUCTION MANUAL(GERMAN)	E	
-		∗	B60-2578-00	INSTRUCTION MANUAL(DUTCH)	E	
-		∗	B60-2579-00	INSTRUCTION MANUAL(ITALIAN)	E	
-		∗	B60-2580-00	INSTRUCTION MANUAL(SPANISH)	ME	
-		∗	B60-2581-00	INSTRUCTION MANUAL(TAIWAN)	M	
-		∗	B60-2647-00	INSTRUCTION MANUAL(CHINESE)	M	
620	3H	∗	D10-3607-04	LEVER		
621	3H		D39-0316-05	DAMPER		
⚠ 626	1G		E03-0115-05	AC PLUG ADAPTER	M	
⚠ 627	1J		E30-2592-15	AC POWER CORD	ME	
⚠ 627	1J		E30-2605-05	AC POWER CORD	Y	
⚠ 627	1J		E30-2650-05	AC POWER CORD	KP	
⚠ 627	1J		E30-2717-05	AC POWER CORD	X	
⚠ 627	1J	∗	E30-2829-05	AC POWER CORD	T	
628	2H	∗	E35-1297-05	FLAT CABLE		
635	3G	∗	G01-3840-14	TORSION COIL SPRING(A MECHA)		
636	3G	∗	G01-3841-14	TORSION COIL SPRING(B MECHA)		
-		∗	H10-7155-22	POLYSTYRENE FOAMED FIXTURE		
-		∗	H10-7156-22	POLYSTYRENE FOAMED FIXTURE		
-			H13-0086-04	CARTON BOARD		
-			H25-0632-24	PROTECTION BAG	KPYMXE	
-			H25-0644-04	PROTECTION BAG	T	
-			H25-1509-04	PROTECTION BAG	M	
-			H25-1536-04	PROTECTION BAG	KPYXTE	
-		∗	H50-1816-04	ITEM CARTON CASE	KPYX	
-		∗	H50-1817-04	ITEM CARTON CASE	M	

L : Scandinavia **K** : USA **P** : Canada **3** : RXD-G3 **4** : RXD-G4
Y : PX(Far East, Hawaii) **T** : Europe **E** : Europe **5** : RXD-G5 **31** : RXD-G31
Y : AAFES(Europe) **X** : Australia **M** : Other Areas **51** : RXD-G51
C : China **I** : Malaysia ⚠ indicates safety critical components.

∗ New Parts
Parts without **Parts No.** are not supplied.
Les articles non mentionnes dans le **Parts No.** ne sont pas fournis.
Teile ohne **Parts No.** werden nicht geliefert.

❷

Ref. No	Add-ress	New Parts	Parts No.	Description	Desti-nation	Re-marks
-		∗	H50-1820-04	ITEM CARTON CASE	TE	
642	1J		J19-2808-05	HOLDER	M	
⚠ 649	1J		J42-0083-05	POWER CORD BUSHING		
-			J61-0307-05	WIRE BAND		
653	3G,3H		K29-6016-14	KNOB (EJECT)		
654	2G	∗	K29-6269-04	KNOB (CD-O/C)		
655	2H	∗	K29-6270-12	KNOB (SELECTOR)		
656	2G	∗	K29-6268-14	KNOB (DISC-SEL)		
657	2H	∗	K29-6267-02	KNOB (POWER)		
658	3G	∗	K29-6294-14	KNOB (VOL)		
659	3G	∗	K29-6295-14	KNOB (MIC-MIX)		
⚠ 662	2J	∗	L07-2024-05	POWER TRANSFORMER	KP	
⚠ 662	2J	∗	L07-2025-05	POWER TRANSFORMER	YM	
⚠ 662	2J	∗	L07-2026-05	POWER TRANSFORMER	X	
⚠ 662	2J	∗	L07-2027-05	POWER TRANSFORMER	TE	
665	1G		T90-0801-05	LEAD WIRE ANTENNA	KPYMX	
665	1G		T90-0809-05	LEAD WIRE ANTENNA	TE	
666	1G	∗	T90-0820-05	LOOP ANTENNA		
RXD-G4						
601	1H	∗	A01-3281-11	METALLIC CABINET		
603	2G	∗	A21-1887-12	DRESSING PANEL		
604	2G	∗	A29-0808-12	PANEL (TRAY)		
605	3G	∗	A53-1912-12	CASSETTE HOLDER(A MECHA)		
606	3G	∗	A53-1913-12	CASSETTE HOLDER(B MECHA)		
607	2H	∗	A60-0822-11	PANEL	YMICXT	
607	2H	∗	A60-0822-11	PANEL	E	
607	2H	∗	A60-0900-11	PANEL	KP	
608	1G	∗	A70-1054-05	REMOTE CONTROLLER ASSY	TE	
608	1G	∗	A70-1063-05	REMOTE CONTROLLER ASSY	KPYMIC	
608	1G	∗	A70-1063-05	REMOTE CONTROLLER ASSY	X	
609	1G	∗	A09-0345-08	BATTERY COVER	KP	
614	2G	∗	B10-2181-12	FRONT GLASS	KPYMIC	
614	2G	∗	B10-2181-12	FRONT GLASS	X	
614	2G	∗	B10-2183-12	FRONT GLASS	TE	
615	3G	∗	B10-2187-23	FRONT GLASS (LID-A)		
616	3G	∗	B10-2188-13	FRONT GLASS (LID-B)		
-			B46-0096-53	WARRANTY CARD	X	
-			B46-0121-33	WARRANTY CARD	P	
-		∗	B46-0307-23	WARRANTY CARD	KY	
-			B46-0310-03	WARRANTY CARD	TE	
-		∗	B46-0326-03	WARRANTY CARD	C	
-			B58-0513-04	CAUTION CARD (PRESET220-240)	Y	
-			B58-0964-13	CAUTION CARD	KY	
-		∗	B58-0965-13	CAUTION CARD	XT	
-		∗	B58-0966-13	CAUTION CARD	MICE	
-		∗	B58-0967-03	CAUTION CARD	P	
-			B59-1104-00	SERVICE DIRECTORY	Y	
-		∗	B60-2587-00	INSTRUCTION MANUAL(ENGLISH)	YMICX	
-		∗	B60-2588-00	INSTRUCTION MANUAL(ENGLISH)	KP	
-		∗	B60-2589-00	INSTRUCTION MANUAL(ENGLISH)	T	
-		∗	B60-2590-00	INSTRUCTION MANUAL(FRENCH)	P	
-		∗	B60-2591-00	INSTRUCTION MANUAL(FRENCH)	E	

L : Scandinavia **K** : USA **P** : Canada **3** : RXD-G3 **4** : RXD-G4
Y : PX(Far East, Hawaii) **T** : Europe **E** : Europe **5** : RXD-G5 **31** : RXD-G31
Y : AAFES(Europe) **X** : Australia **M** : Other Areas **51** : RXD-G51
C : China **I** : Malaysia ⚠ indicates safety critical components.

RXD-G3/G4/G5/G31/G51
PARTS LIST

∗ New Parts
Parts without **Parts No.** are not supplied.
Les articles non mentionnes dans le **Parts No.** ne sont pas fournis.
Teile ohne **Parts No.** werden nicht geliefert.

❸

Ref. No	Add-ress	New Parts	Parts No.	Description	Desti-nation	Re-marks
-		∗	B60-2592-00	INSTRUCTION MANUAL(GERMAN)	E	
-		∗	B60-2593-00	INSTRUCTION MANUAL(DUTCH)	E	
-		∗	B60-2594-00	INSTRUCTION MANUAL(ITALIAN)	E	
-		∗	B60-2595-00	INSTRUCTION MANUAL(SPANISH)	M	
-		∗	B60-2596-00	INSTRUCTION MANUAL(SPANISH)	E	
-		∗	B60-2597-00	INSTRUCTION MANUAL(CHINESE)	MIC	
-		∗	B60-2598-00	INSTRUCTION MANUAL(TAIWAN)	M	
620	3H	∗	D10-3607-04	LEVER		
621	3H		D39-0316-05	DAMPER		
⚠ 626	1G		E03-0115-05	AC PLUG ADAPTER	MI	
⚠ 627	1J		E30-2592-15	AC POWER CORD	MIE	
⚠ 627	1J		E30-2605-05	AC POWER CORD	Y	
⚠ 627	1J		E30-2650-05	AC POWER CORD	KP	
⚠ 627	1J		E30-2717-05	AC POWER CORD	X	
⚠ 627	1J	∗	E30-2829-05	AC POWER CORD	T	
⚠ 627	1J		E30-2830-05	AC POWER CORD	C	
628	2H	∗	E35-1297-05	FLAT CABLE		
635	3G	∗	G01-3840-14	TORSION COIL SPRING(A MECHA)		
636	3G	∗	G01-3841-14	TORSION COIL SPRING(B MWCHA)		
-		∗	H10-7155-22	POLYSTYRENE FOAMED FIXTURE		
-		∗	H10-7156-22	POLYSTYRENE FOAMED FIXTURE		
-			H13-0086-04	CARTON BOARD		
-			H25-0632-24	PROTECTION BAG	KPYMIC	
-			H25-0632-24	PROTECTION BAG	XE	
-			H25-0644-04	PROTECTION BAG	T	
-			H25-1509-04	PROTECTION BAG	MIC	
-			H25-1536-04	PROTECTION BAG	KPYXTE	
-		∗	H50-1823-04	ITEM CARTON CASE	KPYX	
-		∗	H50-1824-04	ITEM CARTON CASE	MC	
-		∗	H50-1825-04	ITEM CARTON CASE	I	
-		∗	H50-1827-04	ITEM CARTON CASE	TE	
640	3J		J02-0366-15	FOOT	KP	
641	1G	∗	J02-1155-04	FOOT	KP	
642	1J		J19-2808-05	HOLDER	MIC	
⚠ 649	1J		J42-0083-05	POWER CORD BUSHING		
-			J61-0307-05	WIRE BAND		
653	3G,3H		K29-6016-14	KNOB (EJECT)		
654	2G	∗	K29-6269-04	KNOB (CD-O/C)		
655	2H	∗	K29-6270-12	KNOB (SELECTOR)		
656	2G	∗	K29-6271-24	KNOB (DISC-SEL)		
657	2H	∗	K29-6267-02	KNOB (POWER)		
658	3G	∗	K29-6294-14	KNOB (VOL)		
659	3G	∗	K29-6295-14	KNOB (MIC/MIX)		
⚠ 662	2J	∗	L07-2029-05	POWER TRANSFORMER	KP	
⚠ 662	2J	∗	L07-2030-05	POWER TRANSFORMER	YMI	
⚠ 662	2J	∗	L07-2031-05	POWER TRANSFORMER	X	
⚠ 662	2J	∗	L07-2032-05	POWER TRANSFORMER	TE	
⚠ 662	2J	∗	L07-2133-05	POWER TRANSFORMER	C	
665	1G		T90-0801-05	LEAD WIRE ANTENNA	KPYMIC	
665	1G		T90-0801-05	LEAD WIRE ANTENNA	X	
665	1G		T90-0809-05	LEAD WIRE ANTENNA	TE	
666	1G	∗	T90-0820-05	LOOP ANTENNA		

L : Scandinavia **K** : USA **P** : Canada **3** : RXD-G3 **4** : RXD-G4
Y : PX(Far East, Hawaii) **T** : Europe **E** : Europe **5** : RXD-G5 **31** : RXD-G31
Y : AAFES(Europe) **X** : Australia **M** : Other Areas **51** : RXD-G51
C : China **I** : Malaysia ⚠ indicates safety critical components.

∗ New Parts
Parts without **Parts No.** are not supplied.
Les articles non mentionnes dans le **Parts No.** ne sont pas fournis.
Teile ohne **Parts No.** werden nicht geliefert.

❹

Ref. No	Add-ress	New Parts	Parts No.	Description	Desti-nation	Re-marks
RXD-G5						
601	1H	∗	A01-3281-11	METALLIC CABINET		
603	2G	∗	A21-1887-12	DRESSING PANEL		
604	2G	∗	A29-0808-12	PANEL (TRAY)		
605	3G	∗	A53-1912-12	CASSETTE HOLDER(A MECHA)		
606	3G	∗	A53-1913-12	CASSETTE HOLDER(B MECHA)		
607	2H	∗	A60-0826-11	PANEL	YMICXT	
607	2H	∗	A60-0826-11	PANEL	E	
607	2H	∗	A60-0902-11	PANEL	KP	
608	1G	∗	A70-1055-05	REMOTE CONTROLLER ASSY	KPYMIC	
608	1G	∗	A70-1055-05	REMOTE CONTROLLER ASSY	X	
608	1G	∗	A70-1056-05	REMOTE CONTROLLER ASSY	TE	
609	1G	∗	A09-0345-08	BATTERY COVER	KPYMIC	
614	2G	∗	B10-2184-12	FRONT GLASS	KPYMIC	
614	2G	∗	B10-2184-12	FRONT GLASS	X	
614	2G	∗	B10-2186-12	FRONT GLASS	TE	
615	3G	∗	B10-2187-23	FRONT GLASS (LID-A)		
616	3G	∗	B10-2188-13	FRONT GLASS (LID-B)		
-			B46-0096-53	WARRANTY CARD	X	
-			B46-0121-33	WARRANTY CARD	P	
-		∗	B46-0307-23	WARRANTY CARD	KY	
-			B46-0310-03	WARRANTY CARD	TE	
-		∗	B46-0326-03	WARRANTY CARD	C	
-			B58-0513-04	CAUTION CARD (PRESET220-240)	Y	
-			B58-0964-13	CAUTION CARD	KY	
-		∗	B58-0965-13	CAUTION CARD	XT	
-		∗	B58-0966-13	CAUTION CARD	MICE	
-		∗	B58-0967-03	CAUTION CARD	P	
-			B59-1104-00	SERVICE DIRECTORY	Y	
-		∗	B60-2599-00	INSTRUCTION MANUAL(ENGLISH)	KPYMIC	
-		∗	B60-2599-00	INSTRUCTION MANUAL(ENGLISH)	X	
-		∗	B60-2600-00	INSTRUCTION MANUAL(ENGLISH)	T	
-		∗	B60-2601-00	INSTRUCTION MANUAL(FRENCH)	P	
-		∗	B60-2602-00	INSTRUCTION MANUAL(FRENCH)	E	
-		∗	B60-2603-00	INSTRUCTION MANUAL(GERMAN)	E	
-		∗	B60-2604-00	INSTRUCTION MANUAL(GERMAN)	E	
-		∗	B60-2605-00	INSTRUCTION MANUAL(ITALIAN)	E	
-		∗	B60-2606-00	INSTRUCTION MANUAL(SPANISH)	M	
-		∗	B60-2607-00	INSTRUCTION MANUAL(SPANISH)	E	
-		∗	B60-2608-00	INSTRUCTION MANUAL(CHINESE)	MIC	
-		∗	B60-2609-00	INSTRUCTION MANUAL(TAIWAN)	M	
620	3H	∗	D10-3607-04	LEVER		
621	3H		D39-0316-05	DAMPER		
⚠ 626	1G		E03-0115-05	AC PLUG ADAPTER	MI	
⚠ 627	1J		E30-2592-15	AC POWER CORD	MIE	
⚠ 627	1J		E30-2605-05	AC POWER CORD	Y	
⚠ 627	1J		E30-2650-05	AC POWER CORD	KP	
⚠ 627	1J		E30-2717-05	AC POWER CORD	X	
⚠ 627	1J	∗	E30-2829-05	AC POWER CORD	T	
⚠ 627	1J		E30-2830-05	AC POWER CORD	C	
628	2H	∗	E35-1297-05	FLAT CABLE		
635	3G	∗	G01-3840-14	TORSION COIL SPRING		

L : Scandinavia **K** : USA **P** : Canada **3** : RXD-G3 **4** : RXD-G4
Y : PX(Far East, Hawaii) **T** : Europe **E** : Europe **5** : RXD-G5 **31** : RXD-G31
Y : AAFES(Europe) **X** : Australia **M** : Other Areas **51** : RXD-G51
C : China **I** : Malaysia ⚠ indicates safety critical components.

 RXD-G3/G4/G5/G31/G51

EXPLODED VIEW (UNIT)

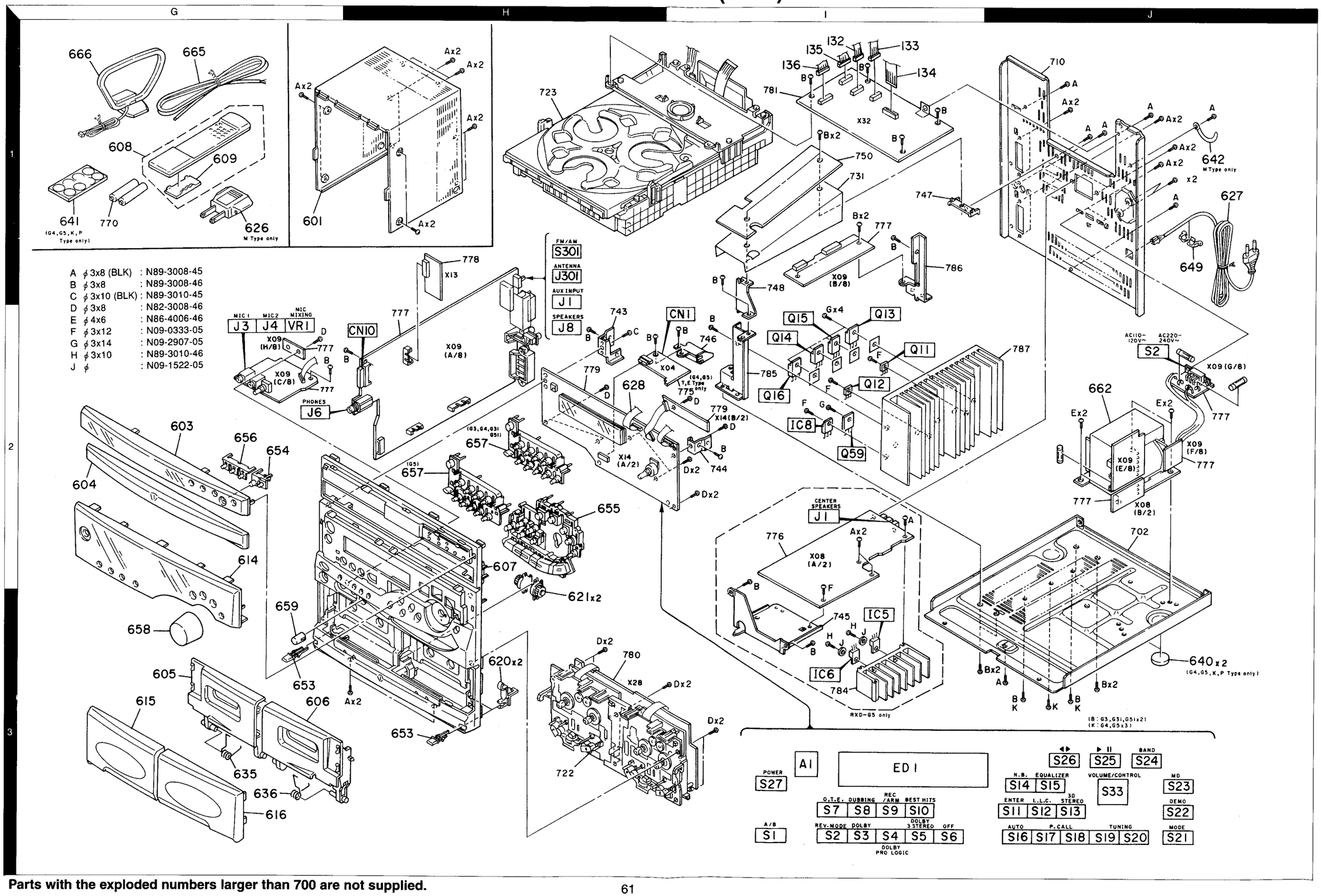

Parts with the exploded numbers larger than 700 are not supplied.

* New Parts
Parts without **Parts No.** are not supplied.
Les articles non mentionnes dans le **Parts No.** ne sont pas fournis.
Teile ohne **Parts No.** werden nicht geliefert.

9

Ref. No	Address	New Parts	Parts No.	Description			Destination	Remarks
IC2		*	LV1011L	DI BI-POLAR IC				
IC3			NJM4565L-D	ANALOGUE IC				
IC4		*	TDA7309	ANALOGUE IC				
IC5 ,6	3I		TDA2050V	ANALOGUE IC				
IC7			XRU4052BC	MOS-IC				
Q1,2			2SC2878(B)	TRANSISTOR				
Q4			2SC3940A(R,S)	TRANSISTOR				
Q4			2SD863(E,F)	TRANSISTOR				
Q5			2SC2003(L,K)	TRANSISTOR				
Q6			DTA113ZS	DIGITAL TRANSISTOR				
Q6			UN4119	TRANSISTOR				
Q7			DTC124ES	DIGITAL TRANSISTOR				
Q7			UN4212	TRANSISTOR				
AUDIO UNIT-TUNER (X09-4XXX-XX)								
C1,2			CC45FCH1H060D	CERAMIC	6.0PF	D	TE	3,4
C1,2			CK45FB1H471K	CERAMIC	470PF	K	TE	5
C3,4			CE04LW1H0R1M	ELECTRO	0.1UF	50WV		5
C5,6			CE04LW1V4R7M	ELECTRO	4.7UF	35WV		
C7,8			CE04LW1H2R2M	ELECTRO	2.2UF	50WV		
C11 -14			CF92FV1H394J	MF-C	0.39UF	J		
C15 -18			CE04LW1V4R7M	ELECTRO	4.7UF	35WV		
C19 ,20			CK73FB1H562K	CHIP C	5600PF	K		
C21 ,22			CE04LW1V4R7M	ELECTRO	4.7UF	35WV		
C23 ,24			CE04LW1H2R2M	ELECTRO	2.2UF	50WV		
C25 -28			CK73FB1E104K	CHIP C	0.10UF	K		
C29 ,30			CK73FB1H223K	CHIP C	0.022UF	K		
C31 ,32			CK73FB1H183K	CHIP C	0.018UF	K		
C33 ,34			CE04LW1C220M	ELECTRO	22UF	16WV		
C35 ,36			CE04LW1H2R2M	ELECTRO	2.2UF	50WV		
C37 ,38			CK73FB1H102K	CHIP C	1000PF	K		
C39 ,40			CC73FSL1H470J	CHIP C	47PF	J		
C43 ,44			CE04LW1A101M	ELECTRO	100UF	10WV		
C45 ,46			CK73FB1H222K	CHIP C	2200PF	K		
C47 ,48			CC73FSL1H101J	CHIP C	100PF	J		
C49 ,50			CC45FSL1H101J	CERAMIC	100PF	J		
C51 ,52			CE04LW1H220M	ELECTRO	22UF	50WV		
C53 ,54			CK45FB1H102K	CERAMIC	1000PF	K		
C55 ,56			CQ92FM1H104J	MYLAR	0.10UF	J		
C57 ,58			CF92FV1H224J	MF-C	0.22UF	J	XTE	
C59 ,60			CK45FB1H102K	CERAMIC	1000PF	K		
C61 ,62			CK45FF1H472Z	CERAMIC	4700PF	Z	TE	
C63 ,64			CE04LW1H2R2M	ELECTRO	2.2UF	50WV		3,31
C63 ,64			CE04LW1H3R3M	ELECTRO	3.3UF	50WV		4,5,51
C100			CK45FF1H103Z	CERAMIC	0.010UF	Z		
C101-103			CK45FF1H103Z	CERAMIC	0.010UF	Z		
C104			CC73FSL1H471J	CHIP C	470PF	J		
C106			CE04LW1C221M	ELECTRO	220UF	16WV		
C107			CE04LW1V4R7M	ELECTRO	4.7UF	35WV		
C108,109			CK73FB1E104K	CHIP C	0.10UF	K		
C110,111			CC73FSL1H101J	CHIP C	100PF	J		
C112,113			CK73FB1H223K	CHIP C	0.022UF	K		
C114			CK73FB1H472K	CHIP C	4700PF	K		
C115			CK73FB1E104K	CHIP C	0.10UF	K		
C116			CK73FB1H122K	CHIP C	1200PF	K		

L : Scandinavia **K** : USA **P** : Canada **3** : RXD-G3 **4** : RXD-G4
Y : PX(Far East, Hawaii) **T** : Europe **E** : Europe **5** : RXD-G5 **31** : RXD-G31
Y : AAFES(Europe) **X** : Australia **M** : Other Areas **51** : RXD-G51
C : China **I** : Malaysia ⚠ indicates safety critical components.

* New Parts
Parts without **Parts No.** are not supplied.
Les articles non mentionnes dans le **Parts No.** ne sont pas fournis.
Teile ohne **Parts No.** werden nicht geliefert.

10

Ref. No	Address	New Parts	Parts No.	Description			Destination	Remarks
C117			CK73FB1H562K	CHIP C	5600PF	K		
C118			CF92FV1H684J	MF-C	0.68UF	J		
C119			CE04HW1H2R2M	NP-ELEC	2.2UF	50WV		
C120			CE04LW1H010M	ELECTRO	1.0UF	50WV		
C121			CC73FSL1H331J	CHIP C	330PF	J		
C123			CE04LW1H010M	ELECTRO	1.0UF	50WV		
C124			CK73FB1H103K	CHIP C	0.010UF	K		
C125			CE04LW1H010M	ELECTRO	1.0UF	50WV		
C126			CC73FCH1H100D	CHIP C	10PF	D		
C127			CC73FSL1H821J	CHIP C	820PF	J		
C128			CC73FSL1H101J	CHIP C	100PF	J		
C129,130			CE04LW1C470M	ELECTRO	47UF	16WV		
C131			CE04LW1H010M	ELECTRO	1.0UF	50WV		31,51
C132			CK73FB1H103K	CHIP C	0.010UF	K		31,51
C133			CK73FB1H222K	CHIP C	2200PF	K		31,51
C134			CF92FV1H124J	MF-C	0.12UF	J		31,51
C135,136			CE04LW1HR47M	ELECTRO	0.47UF	50WV		31,51
C137			CF92FV1H105J	MF-C	1.0UF	J		31,51
C138			CC73FSL1H101J	CHIP C	100PF	J		31,51
C139			CE04LW1A470M	ELECTRO	47UF	10WV		31,51
C140			CF92FV1H124J	MF-C	0.12UF	J		31,51
C141			CK73FB1H103K	CHIP C	0.010UF	K		31,51
C142			CK73FB1H222K	CHIP C	2200PF	K		31,51
C143,144			CE04LW1H010M	ELECTRO	1.0UF	50WV		31,51
C145			CE04LW1A470M	ELECTRO	47UF	10WV		31,51
C146			CE04LW1H100M	ELECTRO	10UF	50WV		31,51
C147			CK73FB1H103K	CHIP C	0.010UF	K		
C148			CC73FSL1H271J	CHIP C	270PF	J		
C149			CE04LW1H100M	ELECTRO	10UF	50WV		
C150			CE04LW1J101M	ELECTRO	100UF	63WV		
C151			CE04LW1C470M	ELECTRO	47UF	16WV		
C152			CE04LW2A2R2M	ELECTRO	2.2UF	100WV		
C153			CE04LW1H220M	ELECTRO	22UF	50WV		
C154			CE04LW1V471M	ELECTRO	470UF	35WV		
C155			CE04LW1V221M	ELECTRO	220UF	35WV		
C156			CQ92FM1H332J	MYLAR	3300PF	J		
C157			CE04LW1V332M	ELECTRO	3300UF	35WV	YMICXT	
C157			CE04LW1V332M	ELECTRO	3300UF	35WV	E	
C157			C90-3310-05	ELECTRO	3300UF	35WV	KP	
C158,159			CK73FB1E104K	CHIP C	0.10UF	K		
C160			CE04LW1V470M	ELECTRO	47UF	35WV		
C161			CE04LW1V330M	ELECTRO	33UF	35WV		
C162,163		*	C90-3596-05	ELECTRO	3300UF	50WV	YMXTE	3,31
C162,163		*	C90-3596-05	ELECTRO	3300UF	50WV	IC	31
C162,163		*	C90-3597-05	ELECTRO	4700UF	56WV	KP	3
C162,163		*	C90-3598-05	ELECTRO	4700UF	63WV	YMICXT	4,5,51
C162,163		*	C90-3598-05	ELECTRO	4700UF	63WV	E	4,5
C162,163		*	C90-3599-05	ELECTRO	5600UF	63WV	KP	4,5
C164			CE04LW1A470M	ELECTRO	47UF	10WV		
C165,166			CQ92FM1H104J	MYLAR	0.10UF	J		
C167			CE04LW1V222M	ELECTRO	2200UF	35WV	YMICXT	
C167			CE04LW1V222M	ELECTRO	2200UF	35WV	E	
C167			C90-3309-05	ELECTRO	2200UF	35WV	KP	
C168			CE04LW1V4R7M	ELECTRO	4.7UF	35WV		
C169			CE04LW1H101M	ELECTRO	100UF	50WV		

L : Scandinavia **K** : USA **P** : Canada **3** : RXD-G3 **4** : RXD-G4
Y : PX(Far East, Hawaii) **T** : Europe **E** : Europe **5** : RXD-G5 **31** : RXD-G31
Y : AAFES(Europe) **X** : Australia **M** : Other Areas **51** : RXD-G51
C : China **I** : Malaysia ⚠ indicates safety critical components.

* New Parts
Parts without **Parts No.** are not supplied.
Les articles non mentionnes dans le **Parts No.** ne sont pas fournis.
Teile ohne **Parts No.** werden nicht geliefert.

11

Ref. No	Address	New Parts	Parts No.	Description			Destination	Remarks
C170			CE04LW1V101M	ELECTRO	100UF	35WV		
C171			CE04LW1H221M	ELECTRO	220UF	50WV		
C172			CE04LW1H100M	ELECTRO	10UF	50WV		
C173			CE04LW1V220M	ELECTRO	22UF	35WV		
C174,175			CK45FF1H103Z	CERAMIC	0.010UF	Z		
C176,177			C91-1422-05	MP	0.10UF	250WV		
C179			CE04LW1A470M	ELECTRO	47UF	10WV		
C180			CK45FF1H473Z	CERAMIC	0.047UF	Z		
C181			CK73EB1H103K	CHIP C	0.010UF	K		
C201,202			C91-1422-05	MP	0.10UF	250WV		
C301,302			CK73FB1H103K	CHIP C	0.010UF	K		
C303			CE04LW1H010M	ELECTRO	1.0UF	50WV		
C304			CE04LW1C470M	ELECTRO	47UF	16WV		
C305			CE04LW1A101M	ELECTRO	100UF	10WV		
C306			CK73FB1H223K	CHIP C	0.022UF	K		
C307			CE04LW1H010M	ELECTRO	1.0UF	50WV		
C308			CK73FB1H103K	CHIP C	0.010UF	K		
C309			CE04LW1H010M	ELECTRO	1.0UF	50WV		
C310			CE04LW1HR22M	ELECTRO	0.22UF	50WV		
C311,312			CQ92FM1H123J	MYLAR	0.012UF	J	YMICXT	
C311,312			CQ92FM1H123J	MYLAR	0.012UF	J	E	
C311,312			CQ92FM1H223J	MYLAR	0.022UF	J	KP	
C313			CK45FF1H473Z	CERAMIC	0.047UF	Z		
C315			CE04LW1C100M	ELECTRO	10UF	16WV		
C316			CK73FB1H681K	CHIP C	680PF	K	TE	
C317			CC73FSL1H101J	CHIP C	100PF	J		
C318			CK73FB1H152K	CHIP C	1500PF	K	TE	
C319			CK73FB1H682K	CHIP C	6800PF	K		
C320			CC73FSL1H101J	CHIP C	100PF	J		
C322			CE04LW1C100M	ELECTRO	10UF	16WV		
C323			CE04LW1H2R2M	ELECTRO	2.2UF	50WV		
C324			CE04LW1A101M	ELECTRO	100UF	10WV		
C325			CK45FF1H223Z	CERAMIC	0.022UF	Z		
C326			CC73FCH1H220J	CHIP C	22PF	J		
C327			CK73FB1H223K	CHIP C	0.022UF	K		
C328			CE04LW1H010M	ELECTRO	1.0UF	50WV		
C329			CC73FSL1H020C	CHIP C	2.0PF	C	TE	
C330			CC73FCH1H220J	CHIP C	22PF	J	TE	
C331			CC73FCH1H060D	CHIP C	6.0PF	D	TE	
C332			CK73FB1H222K	CHIP C	2200PF	K	T	
C333			CK73FB1H103K	CHIP C	0.010UF	K		
C334			CC73FSL1H101J	CHIP C	100PF	J	TE	
C343			CC73FSL1H471J	CHIP C	470PF	J		
C344			CC73FCH1H220J	CHIP C	22PF	J		
C345			CC73FCH1H270J	CHIP C	27PF	J		
C346			C91-0757-05	CERAMIC	1000PF	K		
C347,348			CK73FB1H102K	CHIP C	1000PF	K		
C349			CE04LW1C470M	ELECTRO	47UF	16WV		
C350			CE04LW1H2R2M	ELECTRO	2.2UF	50WV		
C351			CQ92FM1H223J	MYLAR	0.022UF	J		
C352			CE04LW1A470M	ELECTRO	47UF	10WV		
C353			CK73FB1H103K	CHIP C	0.010UF	K		
C354			CC73FSL1H101J	CHIP C	100PF	J		
C355,356			CK73FB1H103K	CHIP C	0.010UF	K		
C381			CE04LW1H0R1M	ELECTRO	0.1UF	50WV	TE	4,5

L : Scandinavia **K** : USA **P** : Canada **3** : RXD-G3 **4** : RXD-G4
Y : PX(Far East, Hawaii) **T** : Europe **E** : Europe **5** : RXD-G5 **31** : RXD-G31
Y : AAFES(Europe) **X** : Australia **M** : Other Areas **51** : RXD-G51
C : China **I** : Malaysia ⚠ indicates safety critical components.

* New Parts
Parts without **Parts No.** are not supplied.
Les articles non mentionnes dans le **Parts No.** ne sont pas fournis.
Teile ohne **Parts No.** werden nicht geliefert.

12

Ref. No	Address	New Parts	Parts No.	Description			Destination	Remarks
C382,383			CE04LW1C470M	ELECTRO	47UF	16WV		
C385,386			CE04LW1C100M	ELECTRO	10UF	16WV		
C387,388			CQ92FM1H822J	MYLAR	8200PF	J	YMIC	
C401			CC73FCH1H330J	CHIP C	33PF	J	TE	4,5
C402-405			CK73FB1H102K	CHIP C	1000PF	K	TE	4,5
C406			CK73FB1H333K	CHIP C	0.033UF	K	KPYMIC	
C406			CK73FB1H333K	CHIP C	0.033UF	K	XE	
C407			CK73FB1H333K	CHIP C	0.033UF	K	T	
C408			CK73FB1E473K	CHIP C	0.047UF	K		
C411			CC73FCH1H100D	CHIP C	10PF	D	T	
C431,432			CE04LW1HR47M	ELECTRO	0.47UF	50WV		
CN1			E40-4691-05	PIN ASSY				4,5
CN3			E40-3252-05	PIN ASSY				3,4,5
CN4			E40-3253-05	PIN ASSY				3,4,5
CN5		*	E40-9872-05	SOCKET FOR PIN ASSY				
CN6		*	E40-9871-05	PIN ASSY				
CN7			E40-4814-05	SOCKET FOR PIN ASSY				
CN8			E40-4815-05	PIN ASSY				
CN9		*	E40-9812-05	PIN ASSY				
CN10	2H		E40-4858-05	SOCKET FOR PIN ASSY				
CN24			E40-4632-05	PIN ASSY				
J1	1H	*	E63-0168-05	PHONO JACK				
J3,4	2G		E11-0220-05	MINIATURE PHONE JACK				
J3,4	2G		E11-0283-05	MINIATURE PHONE JACK				
J6	2G		E11-0280-05	PHONE JACK				
J8	2H		E70-0048-05	LOCK TERMINAL BOARD3,4,31,51			YMICXT	
J8	2H		E70-0048-05	LOCK TERMINAL BOARD3,4			E	
J8	2H		E70-0056-05	LOCK TERMINAL BOARD3,4.31,51			YMICXT	
J8	2H		E70-0056-05	LOCK TERMINAL BOARD3,4			E	
J8	2H		E70-0057-05	LOCK TERMINAL BOARD5				
J8	2H		E70-0057-05	LOCK TERMINAL BOARD3,4			KP	
J301	1H		E20-0321-05	LOCK TERMINAL BOARD(2P,F)			TE	
J301	1H		E20-0476-05	LOCK TERMINAL BOARD(4P)			KPYMIC	
J301	1H		E20-0476-05	LOCK TERMINAL BOARD(4P)			X	
J301	1H		E70-0051-05	LOCK TERMINAL BOARD			KPYMIC	
J301	1H		E70-0051-05	LOCK TERMINAL BOARD			X	
J301	1H		E70-0052-05	LOCK TERMINAL BOARD			TE	
⚠ F1,2			F04-5022-05	FUSE (UL)	(125V 5A UL)		KP	3
⚠ F1,2			F05-4025-05	FUSE (SEMKO)	(250V T4A L)		YMICXT	
⚠ F1,2			F05-4025-05	FUSE (SEMKO)	(250V T4A L)		E	
⚠ F1,2			F05-6029-05	FUSE (UL)	(125V 6A)		KP	4,5
⚠ F3			F05-2525-05	FUSE (SEMKO)	(250V T2.5AL)		YMICXT	
⚠ F3			F05-2525-05	FUSE (SEMKO)	(250V T2.5AL)		E	
⚠ F3			F05-4028-05	FUSE (UL)	(125V 4A)		KP	
⚠ F4			F04-5022-05	FUSE (UL)	(125V 5A UL)		KP	4,5
⚠ F4			F06-3027-05	FUSE (UL)	(250V 3A)		KP	3
⚠ F5			F06-2021-05	FUSE (SEMKO)	(250V T2AL)		YMI	
⚠ F6			F50-0062-05	FUSE(5X20)			KP	
⚠ F7			F06-2021-05	FUSE (SEMKO)	(250V T2AL)		YMI	
J302		*	F10-0945-04	SHIELDING PLATE			KPYMIC	
J302		*	F10-0945-04	SHIELDING PLATE			X	
J302		*	F10-0997-04	SHIELDING PLATE			TE	
CN12-17			J13-0075-05	FUSE CLIP				

L : Scandinavia **K** : USA **P** : Canada **3** : RXD-G3 **4** : RXD-G4
Y : PX(Far East, Hawaii) **T** : Europe **E** : Europe **5** : RXD-G5 **31** : RXD-G31
Y : AAFES(Europe) **X** : Australia **M** : Other Areas **51** : RXD-G51
C : China **I** : Malaysia ⚠ indicates safety critical components.

* New Parts
Parts without **Parts No.** are not supplied.
Les articles non mentionnes dans le **Parts No.** ne sont pas fournis.
Teile ohne **Parts No.** werden nicht geliefert.

5

Ref. No	Address	New Parts	Parts No.	Description	Destination	Remarks
636	3G	*	G01-3841-14	TORSION COIL SPRING		
-		*	H10-7155-22	POLYSTYRENE FOAMED FIXTURE		
-		*	H10-7156-22	POLYSTYRENE FOAMED FIXTURE		
-			H13-0086-04	CARTON BOARD		
-			H25-0632-24	PROTECTION BAG	KPYMIC	
-			H25-0632-24	PROTECTION BAG	XE	
-			H25-0644-04	PROTECTION BAG	T	
-			H25-1509-04	PROTECTION BAG	MIC	
-			H25-1536-04	PROTECTION BAG	KPYXTE	
-		*	H50-1828-04	ITEM CARTON CASE	KPYX	
-		*	H50-1829-04	ITEM CARTON CASE	MC	
-		*	H50-1831-04	ITEM CARTON CASE	TE	
-		*	H50-1832-04	ITEM CARTON CASE	I	
640	3J		J02-0366-15	FOOT	KP	
641	1G	*	J02-1155-04	FOOT	KP	
642	1J		J19-2808-05	HOLDER	MIC	
⚠ 649	1J		J42-0083-05	POWER CORD BUSHING		
-			J61-0307-05	WIRE BAND		
653	3G,3H		K29-6016-14	KNOB (EJECT)		
654	2G	*	K29-6269-04	KNOB (CD-O/C)		
655	2H	*	K29-6270-12	KNOB (SELECTOR)		
656	2G	*	K29-6271-24	KNOB (DISC-SEL)		
657	2H	*	K29-6272-02	KNOB (POWER)		
658	3G	*	K29-6294-14	KNOB (VOL)		
659	3G	*	K29-6295-14	KNOB (MIC/MIX)		
⚠ 662	2J	*	L07-2033-05	POWER TRANSFORMER	KP	
⚠ 662	2J	*	L07-2034-05	POWER TRANSFORMER	YMI	
⚠ 662	2J	*	L07-2035-05	POWER TRANSFORMER	X	
⚠ 662	2J	*	L07-2036-05	POWER TRANSFORMER	TE	
⚠ 662	2J	*	L07-2134-05	POWER TRANSFORMER	C	
665	1G		T90-0801-05	LEAD WIRE ANTENNA	KPYMIC	
665	1G		T90-0801-05	LEAD WIRE ANTENNA	X	
665	1G		T90-0809-05	LEAD WIRE ANTENNA	TE	
666	1G	*	T90-0820-05	LOOP ANTENNA		
RXD-G31/G51						
601	1H	*	A01-3281-11	METALLIC CABINET		
603	2G	*	A21-1886-12	DRESSING PANEL (G31)		
603	2G	*	A21-1887-12	DRESSING PANEL (G51)		
604	2G	*	A29-0808-12	PANEL (TRAY)		
605	3G	*	A53-1912-12	CASSETTE HOLDER(A MECHA)		
606	3G	*	A53-1913-12	CASSETTE HOLDER(B MECHA)		
607	2H	*	A60-0819-11	PANEL (G31)		
607	2H	*	A60-0822-11	PANEL (G51)		
608	1G	*	A70-1053-05	REMOTE CONTROLLER ASSY (G31)		
608	1G	*	A70-1063-05	REMOTE CONTROLLER ASSY (G51)		
609	1G	*	A09-0345-08	BATTERY COVER		
614	2G	*	B10-2236-12	FRONT GLASS (G31)		
614	2G	*	B10-2237-12	FRONT GLASS (G51)		
615	3G	*	B10-2178-23	FRONT GLASS (LID-A)(G31)		
615	3G	*	B10-2187-23	FRONT GLASS (LID-A)(G51)		
616	3G	*	B10-2179-13	FRONT GLASS (LID-B)(G31)		
616	3G	*	B10-2188-13	FRONT GLASS (LID-B)(G51)		

L : Scandinavia **K** : USA **P** : Canada **3** : RXD-G3 **4** : RXD-G4
Y : PX(Far East, Hawaii) **T** : Europe **E** : Europe **5** : RXD-G5 **31** : RXD-G31
Y : AAFES(Europe) **X** : Australia **M** : Other Areas **51** : RXD-G51
C : China **I** : Malaysia ⚠ indicates safety critical components.

* New Parts
Parts without **Parts No.** are not supplied.
Les articles non mentionnes dans le **Parts No.** ne sont pas fournis.
Teile ohne **Parts No.** werden nicht geliefert.

6

Ref. No	Address	New Parts	Parts No.	Description	Destination	Remarks
-		*	B46-0326-03	WARRANTY CARD	C	
-		*	B58-0966-13	CAUTION CARD		
-		*	B60-2715-00	INSTRUCTION MANUAL(ENGLISH)G31		
-		*	B60-2716-00	INSTRUCTION MANUAL(SPANISH)G31	M	
-		*	B60-2717-00	INSTRUCTION MANUAL(CHINESE)G31		
-		*	B60-2718-00	INSTRUCTION MANUAL(TAIWAN) G31	M	
-		*	B60-2719-00	INSTRUCTION MANUAL(ENGLISH)G51		
-		*	B60-2720-00	INSTRUCTION MANUAL(SPANISH)G51	M	
-		*	B60-2721-00	INSTRUCTION MANUAL(CHINESE)G51		
-		*	B60-2722-00	INSTRUCTION MANUAL(TAIWAN) G51	M	
620	3H	*	D10-3607-04	LEVER		
621	3H		D39-0316-05	DAMPER		
⚠ 626	1G		E03-0115-05	AC PLUG ADAPTER	MI	
⚠ 627	1J		E30-2592-15	AC POWER CORD	MI	
⚠ 627	1J		E30-2830-05	AC POWER CORD	C	
628	2H	*	E35-1297-05	FLAT CABLE		
635	3G	*	G01-3840-14	TORSION COIL SPRING(A MECHA)		
636	3G	*	G01-3841-14	TORSION COIL SPRING(B MECHA)		
-		*	H10-7155-22	POLYSTYRENE FOAMED FIXTURE		
-		*	H10-7156-22	POLYSTYRENE FOAMED FIXTURE		
-			H13-0086-04	CARTON BOARD		
-			H25-0632-24	PROTECTION BAG		
-			H25-1509-04	PROTECTION BAG		
-		*	H50-1948-04	ITEM CARTON CASE(G31)	MC	
-		*	H50-1949-04	ITEM CARTON CASE(G31)	I	
-		*	H50-1950-04	ITEM CARTON CASE(G51)	MC	
-		*	H50-1951-04	ITEM CARTON CASE(G51)	I	
642	1J		J19-2808-05	HOLDER		
⚠ 649	1J		J42-0083-05	POWER CORD BUSHING		
-			J61-0307-05	WIRE BAND		
653	3G,3H		K29-6016-14	KNOB (EJECT)		
654	2G	*	K29-6269-04	KNOB (CD-O/C)		
655	2H	*	K29-6270-12	KNOB (SELECTOR)		
656	2G	*	K29-6268-14	KNOB (DISC-SEL)(G31)		
656	2G	*	K29-6271-24	KNOB (DISC-SEL)(G51)		
657	2H	*	K29-6267-02	KNOB (POWER)		
658	3G	*	K29-6294-14	KNOB (VOL)		
659	3G	*	K29-6295-14	KNOB (MIC/MIX)		
⚠ 662	2J	*	L07-2025-05	POWER TRANSFORMER(G31)	MI	
⚠ 662	2J	*	L07-2030-05	POWER TRANSFORMER(G51)	MI	
⚠ 662	2J	*	L07-2132-05	POWER TRANSFORMER(G31)	C	
⚠ 662	2J	*	L07-2133-05	POWER TRANSFORMER(G51)	C	
665	1G		T90-0801-05	LEAD WIRE ANTENNA		
666	1G	*	T90-0820-05	LOOP ANTENNA		
RDS UNIT (X04-1302-70)						
C1			CK45FF1H103Z	CERAMIC 0.010UF Z	TE	
C2			CE04LW1H2R2M	ELECTRO 2.2UF 50WV	TE	
C3			CC45FSL1H331J	CERAMIC 330PF J	TE	
C4			CK45FB1H561K	CERAMIC 560PF K	TE	
C5			CC45FCH1H470J	CERAMIC 47PF J	TE	
C6			CC45FCH1H220J	CERAMIC 22PF J	TE	
C7,8			CK45FF1H103Z	CERAMIC 0.010UF Z	TE	

L : Scandinavia **K** : USA **P** : Canada **3** : RXD-G3 **4** : RXD-G4
Y : PX(Far East, Hawaii) **T** : Europe **E** : Europe **5** : RXD-G5 **31** : RXD-G31
Y : AAFES(Europe) **X** : Australia **M** : Other Areas **51** : RXD-G51
C : China **I** : Malaysia ⚠ indicates safety critical components.

* New Parts
Parts without **Parts No.** are not supplied.
Les articles non mentionnes dans le **Parts No.** ne sont pas fournis.
Teile ohne **Parts No.** werden nicht geliefert.

7

Ref. No	Address	New Parts	Parts No.	Description	Destination	Remarks
C9			CE04LW1C470M	ELECTRO 47UF 16WV	TE	
C10			CK45FF1H103Z	CERAMIC 0.010UF Z	TE	
CN1	2I		E40-4797-05	SOCKET FOR PIN ASSY	TE	
L1			L40-1091-17	SMALL FIXED INDUCTOR(1UH)	TE	
L2			L40-1001-17	SMALL FIXED INDUCTOR(10UH,K)	TE	
X1			L77-2002-05	CRYSTAL RESONATOR(4.332MHZ)	TE	
X2			L78-0244-05	RESONATOR (4.000M)	TE	
D1			HSS104	DIODE	TE	
D1			1SS133	DIODE	TE	
IC1			SAA6579	ANALOGUE IC	TE	
IC2			LC6543H-4D68	MI-COM IC	TE	
SURROUND UNIT (X08-270X-XX) : RXD-G5 ONLY						
C1,2			CE04LW1H010M	ELECTRO 1.0UF 50WV		
C3,4			CE04LW1H100M	ELECTRO 10UF 50WV		
C5			CF92FV1H394J	MF-C 0.39UF J		
C7			CK45FF1H103Z	CERAMIC 0.010UF Z		
C8			CE04LW1H2R2M	ELECTRO 2.2UF 50WV		
C9,10			CE04LW1H010M	ELECTRO 1.0UF 50WV		
C13 ,14			CE04LW1V4R7M	ELECTRO 4.7UF 35WV		
C15 ,16			CC45FSL1H470J	CERAMIC 47PF J		
C19 ,20			CE04LW1V4R7M	ELECTRO 4.7UF 35WV		
C21 ,22			CK45FB1H102K	CERAMIC 1000PF K		
C23 ,24			CE04LW1V220M	ELECTRO 22UF 35WV		
C25 ,26			CK45FB1H222K	CERAMIC 2200PF K		
C27			CQ92FM1H104J	MYLAR 0.10UF J	YMICXT	
C27			CQ92FM1H104J	MYLAR 0.10UF J	E	
C28			CE04LW1E471M	ELECTRO 470UF 25WV		
C31 ,32			CQ92FM1H104J	MYLAR 0.10UF J		
C35 ,36			CQ92FM1H472J	MYLAR 4700PF J	KP	
C35 ,36			CQ92FM1H822J	MYLAR 8200PF J	YMICXT	
C35 ,36			CQ92FM1H822J	MYLAR 8200PF J	E	
C37			CQ92FM1H104J	MYLAR 0.10UF J		
C38			CE04LW1C221M	ELECTRO 220UF 16WV		
C39			CQ92FM1H333J	MYLAR 0.033UF J		
C40			CQ92FM1H152J	MYLAR 1500PF J		
C41			CQ92FM1H333J	MYLAR 0.033UF J		
C42			CE04LW1C221M	ELECTRO 220UF 16WV		
C43			CK45FF1H103Z	CERAMIC 0.010UF Z		
C44			CE04LW1H100M	ELECTRO 10UF 50WV		
C45			CQ92FM1H103J	MYLAR 0.010UF J		
C46 -48			CC45FSL1H101J	CERAMIC 100PF J		
C49			CQ92FM1H681J	MYLAR 680PF J		
C50			CF92FV1H474J	MF-C 0.47UF J		
C51			CE04LW1C470M	ELECTRO 47UF 16WV		
C52 ,53			CQ92FM1H104J	MYLAR 0.10UF J		
C54			CE04LW1HR47M	ELECTRO 0.47UF 50WV		
C55			CE04LW1V4R7M	ELECTRO 4.7UF 35WV		
C56			CE04LW1HR47M	ELECTRO 0.47UF 50WV		
C57			CE04LW1V4R7M	ELECTRO 4.7UF 35WV		
C58			CF92FV1H154J	MF-C 0.15UF J		
C59			CE04LW1H3R3M	ELECTRO 3.3UF 50WV		
C60 ,61			CF92FV1H154J	MF-C 0.15UF J		
C62			CE04LW1H3R3M	ELECTRO 3.3UF 50WV		

L : Scandinavia **K** : USA **P** : Canada **3** : RXD-G3 **4** : RXD-G4
Y : PX(Far East, Hawaii) **T** : Europe **E** : Europe **5** : RXD-G5 **31** : RXD-G31
Y : AAFES(Europe) **X** : Australia **M** : Other Areas **51** : RXD-G51
C : China **I** : Malaysia ⚠ indicates safety critical components.

* New Parts
Parts without **Parts No.** are not supplied.
Les articles non mentionnes dans le **Parts No.** ne sont pas fournis.
Teile ohne **Parts No.** werden nicht geliefert.

8

Ref. No	Address	New Parts	Parts No.	Description	Destination	Remarks
C63			CF92FV1H154J	MF-C 0.15UF J		
C64			CE04LW1V4R7M	ELECTRO 4.7UF 35WV		
C65			CE04LW1HR47M	ELECTRO 0.47UF 50WV		
C66			CE04LW1V4R7M	ELECTRO 4.7UF 35WV		
C67			CE04LW1HR47M	ELECTRO 0.47UF 50WV		
C68 ,69			CQ92FM1H104J	MYLAR 0.10UF J		
C70			CE04LW1C221M	ELECTRO 220UF 16WV		
C71 -74			CE04LW1H100M	ELECTRO 10UF 50WV		
C75			CE04LW1C221M	ELECTRO 220UF 16WV		
C76			CQ92FM1H473J	MYLAR 0.047UF J		
C77			CQ92FM1H223J	MYLAR 0.022UF J		
C78			CE04KW1E472M	ELECTRO 4700UF 25WV		
C79			CE04LW1E332M	ELECTRO 3300UF 25WV		
C80			CE04LW1H010M	ELECTRO 1.0UF 50WV		
C81			CE04LW1H100M	ELECTRO 10UF 50WV		
C82			CQ92FM1H104J	MYLAR 0.10UF J		
C83			CE04LW1C101M	ELECTRO 100UF 16WV		
C84			CK45FF1H103Z	CERAMIC 0.010UF Z		
C85 ,86			CE04LW1V4R7M	ELECTRO 4.7UF 35WV		
C94 ,95			CC45FSL1H101J	CERAMIC 100PF J		
C96			CE04LW1H010M	ELECTRO 1.0UF 50WV		
C97 -100			CE04LW1V4R7M	ELECTRO 4.7UF 35WV		
C101			CE04LW1C470M	ELECTRO 47UF 16WV		
C102			CE04HW1H2R2M	NP-ELEC 2.2UF 50WV		
C103,104			CK45FF1H103Z	CERAMIC 0.010UF Z		
C105,106			CE04LW1C470M	ELECTRO 47UF 16WV		
C107			CK45FF1H103Z	CERAMIC 0.010UF Z		
J1	2I	*	E70-0067-05	LOCK TERMINAL BOARD		
⚠ F8,9			F05-4025-05	FUSE (SEMKO) (250V T4A L)	YMICXT	
⚠ F8,9			F05-4025-05	FUSE (SEMKO) (250V T4A L)	E	
⚠ F8,9			F05-4028-05	FUSE (UL) (125V 4A)	KP	
CN1 -4			J13-0075-05	FUSE CLIP		
X1			L78-0290-05	RESONATOR (8MHZ)		
R8			RD14NB2E2R2J	RD 2.2 J 1/4W		
R33 ,34			RS14KB3A4R7J	FL-PROOF RS 4.7 J 1W		
R46			RS14KB3D181J	FL-PROOF RS 180 J 2W		
R55			RS14KB3A152J	FL-PROOF RS 1.5K J 1W		
K1		*	S76-0043-05	MAGNETIC RELAY		
D1			MTZJ10(B)	ZENER DIODE		
D1			UZ-10BSB	ZENER DIODE		
D3,4			HSS104A	DIODE		
D3,4			1SS131	DIODE		
D5			D3SBA20F03	DIODE		
D5			RBV-402LFA	DIODE		
D6			MTZJ3.9(B)	ZENER DIODE		
D6			UZ-3.9BSB	ZENER DIODE		
D7			MTZJ6.2(B)	ZENER DIODE		
D7			UZ-6.2BSB	ZENER DIODE		
D8			HSS104A	DIODE		
D8			1SS131	DIODE		
IC1		*	LA2785L	ANALOGUE IC		

L : Scandinavia **K** : USA **P** : Canada **3** : RXD-G3 **4** : RXD-G4
Y : PX(Far East, Hawaii) **T** : Europe **E** : Europe **5** : RXD-G5 **31** : RXD-G31
Y : AAFES(Europe) **X** : Australia **M** : Other Areas **51** : RXD-G51
C : China **I** : Malaysia ⚠ indicates safety critical components.

* New Parts
Parts without **Parts No.** are not supplied.
Les articles non mentionnes dans le **Parts No.** ne sont pas fournis.
Teile ohne **Parts No.** werden nicht geliefert.

17

Ref. No	Address	New Parts	Parts No.	Description	Destination	Remarks
D21 ,22			MTZJ8.2(B)	ZENER DIODE	XTE	5
D21 ,22			UZ-10BSB	ZENER DIODE	KP	4,5
D21 ,22			UZ-11BSB	ZENER DIODE	YMIC	4
D21 ,22			UZ-13BSB	ZENER DIODE	XTEMIC	4,51
D21 ,22			UZ-4.7BSB	ZENER DIODE	YMIC	5
D21 ,22			UZ-8.2BSB	ZENER DIODE	XTE	5
D23 ,24			HSS104A	DIODE		
D23 ,24			1SS131	DIODE		
D25			MTZJ5.6(B)	ZENER DIODE		
D25			UZ-5.6BSB	ZENER DIODE		
D26			KBP02ML-6127	DIODE		
D27			MTZJ13(B)	ZENER DIODE		
D27			UZ-13BSB	ZENER DIODE		
D28			HSS104A	DIODE		5
D28			1SS131	DIODE		5
D29 -32			HSS104A	DIODE		
D29 -32			1SS131	DIODE		
D33 ,34			S5688B	DIODE		
D33 ,34			1SR139-100	DIODE		
D35 ,36			HSS104A	DIODE		
D35 ,36			1SS131	DIODE		
D37 -40			S5688B	DIODE		
D37 -40			1SR139-100	DIODE		
D41 ,42			MTZJ16(B)	ZENER DIODE		
D41 ,42			UZ-16BSB	ZENER DIODE		
D43			HSS104A	DIODE		
D43			1SS131	DIODE		
D44			D3SBA20F03	DIODE		
D44			RBV-402LFA	DIODE		
D45			S5688B	DIODE		
D45			1SR139-100	DIODE		
D46			MTZJ5.6(B)	ZENER DIODE		
D46			UZ-5.6BSB	ZENER DIODE		
D47			MTZJ3.9(B)	ZENER DIODE		
D47			UZ-3.9BSB	ZENER DIODE		
D48			HSS104A	DIODE		
D48			1SS131	DIODE		
D49			MTZJ5.1(B)	ZENER DIODE		
D49			UZ-5.1BSB	ZENER DIODE		
D50			S5688B	DIODE		
D50			1SR139-100	DIODE		
D301			MTZJ6.8(B)	ZENER DIODE		
D301			UZ-6.8BSB	ZENER DIODE		
D302			HSS104	DIODE		
D302			1SS133	DIODE		
D306			HSS104	DIODE		
D306			1SS133	DIODE		
D308			MTZJ5.1(B)	ZENER DIODE		
D308			UZ-5.1BSB	ZENER DIODE		
D309			HSS104	DIODE	TE	4,5
D309		*	1SS133	DIODE	TE	4,5
D310			1SS268	DIODE	TE	4,5
D311,312			HSS104	DIODE		
D311,312		*	1SS133	DIODE		
D314			HSS104	DIODE	TE	4,5

L : Scandinavia **K** : USA **P** : Canada **3** : RXD-G3 **4** : RXD-G4
Y : PX(Far East, Hawaii) **T** : Europe **E** : Europe **5** : RXD-G5 **31** : RXD-G31
Y : AAFES(Europe) **X** : Australia **M** : Other Areas **51** : RXD-G51
C : China **I** : Malaysia ⚠ indicates safety critical components.

* New Parts
Parts without **Parts No.** are not supplied.
Les articles non mentionnes dans le **Parts No.** ne sont pas fournis.
Teile ohne **Parts No.** werden nicht geliefert.

18

Ref. No	Address	New Parts	Parts No.	Description	Destination	Remarks
D314		*	1SS133	DIODE	TE	4,5
D315			MTZJ3.3(B)	ZENER DIODE		
D315			UZ-3.3BSB	ZENER DIODE		
IC1			NJU7313AM	ANALOGUE IC		
IC2			NJM4565MD	IC(OP AMP X2)		
IC3		*	TDA7431	ANALOGUE IC		
IC4			NJM4565MD	IC(OP AMP X2)		
IC5			BU4094BCF	MOS-IC		
IC6			M65844P	IC(DIGITAL ECHO)		31,51
IC7			BU4066BCF	IC(ANALOG SWITCH X4)		31,51
IC8			TA78057S	IC(VOLTAGE REGULATOR/+5.75V)		
IC50			NJM4565MD	IC(OP AMP X2)		4,5
IC301		*	BA1450S	ANALOGUE IC		
IC302			LC72131	MOS-IC		
IC303			NJM4565D	IC(OP AMP X2)		
IC305			M5223P	IC(OP AMP X2)	TE	4,5
Q1,2			2SC2878(B)	TRANSISTOR		
Q3-6			2SC1845(F,E)	TRANSISTOR		
Q3-6			2SC2389S(S,E)	TRANSISTOR		3,5,31,51
Q7,8			2SA992(F,E)	TRANSISTOR		
Q9,10			2SC1845(F,E)	TRANSISTOR		5,31,51
Q9,10			2SC1845(F,E)	TRANSISTOR	E	3,4
Q9,10			2SC1845(F,E)	TRANSISTOR	YMICXT	3,4
Q9,10			2SC2389S(S,E)	TRANSISTOR		5,31,51
Q9,10			2SC2389S(S,E)	TRANSISTOR	YMXTE	3
Q11 ,12			2SC4137F50(V,W	TRANSISTOR		
Q13 ,14			2SD2389	TRANSISTOR	KP	4,5
Q13 ,14			2SD2493	TRANSISTOR	YMICXT	4,5
Q13 ,14			2SD2493	TRANSISTOR	E	4,5
Q13 ,14			2SD2493	TRANSISTOR		3,31,51
Q15 ,16			2SB1559	TRANSISTOR	KP	4,5
Q15 ,16			2SB1624	TRANSISTOR	YMICXT	4,5
Q15 ,16			2SB1624	TRANSISTOR	E	4,5
Q15 ,16			2SB1624	TRANSISTOR		3,31,51
Q17 ,18			2SC2003(L,K)	TRANSISTOR		
Q50 ,51			DTC124EU	DIGITAL TRANSISTOR		
Q50 ,51			UN5212	TRANSISTOR		
Q52			2SA1175(F,E)	TRANSISTOR		
Q52			2SA933S(Q,R)	TRANSISTOR		
Q53			2SC1740S(Q,R)	TRANSISTOR		
Q53			2SC2785(F,E)	TRANSISTOR		
Q54			2SA1175(F,E)	TRANSISTOR		
Q54			2SA933S(Q,R)	TRANSISTOR		
Q55 ,56			2SC2003(L,K)	TRANSISTOR		
Q57			2SA1175(F,E)	TRANSISTOR		
Q57			2SA933S(Q,R)	TRANSISTOR		
Q58			2SA954(L,K)	TRANSISTOR		
Q59			2SD1893	TRANSISTOR	YMICXT	
Q59			2SD1893	TRANSISTOR	E	
Q59			2SD1894	TRANSISTOR	KP	
Q60 ,61			2SC4081(R,S)	TRANSISTOR		
Q60 ,61			2SD1819A(Q,R)	TRANSISTOR		
Q62			2SC2003(L,K)	TRANSISTOR		5
Q63 ,64			2SB1370	TRANSISTOR		
Q63 ,64			2SB1375	TRANSISTOR		

L : Scandinavia **K** : USA **P** : Canada **3** : RXD-G3 **4** : RXD-G4
Y : PX(Far East, Hawaii) **T** : Europe **E** : Europe **5** : RXD-G5 **31** : RXD-G31
Y : AAFES(Europe) **X** : Australia **M** : Other Areas **51** : RXD-G51
C : China **I** : Malaysia ⚠ indicates safety critical components.

* New Parts
Parts without **Parts No.** are not supplied.
Les articles non mentionnes dans le **Parts No.** ne sont pas fournis.
Teile ohne **Parts No.** werden nicht geliefert.

19

Ref. No	Address	New Parts	Parts No.	Description	Destination	Remarks
Q65			2SC2003(L,K)	TRANSISTOR		
Q66			2SA1286	TRANSISTOR		
Q301			2SC2714(R,O)	TRANSISTOR		
Q302			2SA1576(R,S)	TRANSISTOR		
Q302		*	2SB1218A(Q,R)	TRANSISTOR		
Q304-306			2SC4081(R,S)	TRANSISTOR		
Q304-306			2SD1819A(Q,R)	TRANSISTOR		
Q307			2SA1576(R,S)	TRANSISTOR		
Q307		*	2SB1218A(Q,R)	TRANSISTOR		
Q308			2SC4081(R,S)	TRANSISTOR	TE	
Q308			2SD1819A(Q,R)	TRANSISTOR	TE	
Q309			2SC4081(R,S)	TRANSISTOR	T	
Q309			2SD1819A(Q,R)	TRANSISTOR	T	
Q310			2SA1576(R,S)	TRANSISTOR	T	
Q310		*	2SB1218A(Q,R)	TRANSISTOR	T	
Q311			2SC2878(B)	TRANSISTOR	T	
Q312			2SC4081(R,S)	TRANSISTOR	TE	4,5
Q312			2SD1819A(Q,R)	TRANSISTOR	TE	4,5
Q313			2SA1576(R,S)	TRANSISTOR	TE	4,5
Q313		*	2SB1218A(Q,R)	TRANSISTOR	TE	4,5
Q314			2SC1740S(Q,R)	TRANSISTOR	T	
Q314			2SC2785(F,E)	TRANSISTOR	T	
Q315,316			2SC4081(R,S)	TRANSISTOR	YMIC	
Q315,316			2SD1819A(Q,R)	TRANSISTOR	YMIC	
A301		*	W02-2539-05	FM FRONT-END ASSY	KPYMIC	
A301		*	W02-2539-05	FM FRONT-END ASSY	X	
A301			W02-2540-05	FM FRONT-END ASSY	TE	
SUB CIRCUIT (X13-7360-00)						
C1,2			CE04LW1HR33M	ELECTRO 0.33UF 50WV		
C3-8			CE04LW1H100M	ELECTRO 10UF 50WV		
C9			CQ92FM1H472J	MYLAR 4700PF J		
C10			CE04LW1HR47M	ELECTRO 0.47UF 50WV		
C11			CC45FSL1H050C	CERAMIC 5.0PF C		
C13			CE04LW1C101M	ELECTRO 100UF 16WV		
C14			CQ92FM1H104J	MYLAR 0.10UF J		
C15 ,16			CC45FSL1H101J	CERAMIC 100PF J		
C20			CE04LW1C220M	ELECTRO 22UF 16WV		
CN1			E40-4690-05	PIN ASSY		
D1			MTZJ8.2(B)	ZENER DIODE		
D1			UZ-8.2BSB	ZENER DIODE		
IC1			NJM4565D	IC(OP AMP X2)		
IC2			TDA7309	ANALOGUE IC		
IC3			NJM4565D	IC(OP AMP X2)		
DISPLAY UNIT (X14-41XX-XX)						
D57 -61			B30-2462-05	LED(GRN)		
D62 -65			B30-2476-05	LED(GRN & RED)		
D66			B30-2462-05	LED(GRN)		
D67 -69			B30-2476-05	LED(GRN & RED)		4,5,31,51
C1			C90-3216-05	ELECTRO 330UF 6.3WV		
C2			CK73FB1E104K	CHIP C 0.10UF K		
C3			CK73FB1H223K	CHIP C 0.022UF K		
C4,5			C90-3253-05	ELECTRO 1.0UF 50WV		
C6			CK73FB1H103K	CHIP C 0.010UF K		

L : Scandinavia **K** : USA **P** : Canada **3** : RXD-G3 **4** : RXD-G4
Y : PX(Far East, Hawaii) **T** : Europe **E** : Europe **5** : RXD-G5 **31** : RXD-G31
Y : AAFES(Europe) **X** : Australia **M** : Other Areas **51** : RXD-G51
C : China **I** : Malaysia ⚠ indicates safety critical components.

* New Parts
Parts without **Parts No.** are not supplied.
Les articles non mentionnes dans le **Parts No.** ne sont pas fournis.
Teile ohne **Parts No.** werden nicht geliefert.

20

Ref. No	Address	New Parts	Parts No.	Description	Destination	Remarks
C7			C90-3253-05	ELECTRO 1.0UF 50WV		
C8			CC73FCH1H220J	CHIP C 22PF J		
C9			CC73FCH1H180J	CHIP C 18PF J		
C10 ,11			CK73FB1H103K	CHIP C 0.010UF K		
C12			CE04LW1H100M	ELECTRO 10UF 50WV		
C13			CC73FSL1H102J	CHIP C 1000PF J		
C14 -16			CC73FSL1H101J	CHIP C 100PF J		
C17 -20			CK73FB1E104K	CHIP C 0.10UF K		
C21			C90-3258-05	ELECTRO 10UF 50WV		
C22			CC73FSL1H102J	CHIP C 1000PF J		
C23			CC73FSL1H271J	CHIP C 270PF J		
C24			CK73FB1H103K	CHIP C 0.010UF K		
C25 ,26			CK73EF1E105Z	CHIP C 1.0UF Z		
C30			CE04LW1A470M	ELECTRO 47UF 10WV		
C31			CK73FB1H103K	CHIP C 0.010UF K		
CN1			E40-4857-05	PIN ASSY		
CN2			E40-4789-05	PIN ASSY 4,5	TE	
CN3		*	E40-4902-05	FLAT CABLE CONNECTOR		
X1			L77-2111-05	CRYSTAL RESONATOR(32.768KHZ)		
X2			L78-0605-05	RESONATOR (8.38MHZ)		
CP1			R90-0949-05	MULTIPLE RESISTOR		
CP2			R90-0802-05	MULTI-COMP 100KX10 J 1/4W		
R5			RK73FB2A102J	CHIP R 1.0K J 1/10W		
R6			RK73FB2A103J	CHIP R 10K J 1/10W		
R8			RK73FB2A104J	CHIP R 100K J 1/10W		
R9			RK73FB2A102J	CHIP R 1.0K J 1/10W		
R10			RK73FB2A103J	CHIP R 10K J 1/10W		
R11			RK73FB2A101J	CHIP R 100 J 1/10W		
R12			RK73FB2A474J	CHIP R 470K J 1/10W		
R13			RK73FB2A475K	CHIP R 4.7M K 1/10W		
R15			RK73FB2A101J	CHIP R 100 J 1/10W		
R16			RK73FB2A472J	CHIP R 4.7K J 1/10W		
R17 ,18			RK73FB2A103J	CHIP R 10K J 1/10W		
R22 -27			RK73FB2A103J	CHIP R 10K J 1/10W		
R32 ,33			RK73FB2A562J	CHIP R 5.6K J 1/10W		
R34			RK73FB2A473J	CHIP R 47K J 1/10W		
R37 ,38			RK73FB2A104J	CHIP R 100K J 1/10W		
R39			RK73FB2A473J	CHIP R 47K J 1/10W		
R41			RK73FB2A473J	CHIP R 47K J 1/10W		
R47 ,48			RK73FB2A103J	CHIP R 10K J 1/10W		
R49 ,50			RK73FB2A473J	CHIP R 47K J 1/10W		
R52			RK73FB2A223J	CHIP R 22K J 1/10W		
R54			RK73FB2A223J	CHIP R 22K J 1/10W		
R56			RK73FB2A223J	CHIP R 22K J 1/10W		
R57			RK73FB2A103J	CHIP R 10K J 1/10W		
R58			RK73FB2A223J	CHIP R 22K J 1/10W		
R59			RK73FB2A103J	CHIP R 10K J 1/10W		
R60			RK73FB2A223J	CHIP R 22K J 1/10W		
R61			RK73FB2A103J	CHIP R 10K J 1/10W		
R62			RK73FB2A223J	CHIP R 22K J 1/10W		
R63			RK73FB2A103J	CHIP R 10K J 1/10W		
R64			RK73FB2A223J	CHIP R 22K J 1/10W		
R65			RK73FB2A103J	CHIP R 10K J 1/10W		
R66			RK73FB2A223J	CHIP R 22K J 1/10W		

L : Scandinavia **K** : USA **P** : Canada **3** : RXD-G3 **4** : RXD-G4
Y : PX(Far East, Hawaii) **T** : Europe **E** : Europe **5** : RXD-G5 **31** : RXD-G31
Y : AAFES(Europe) **X** : Australia **M** : Other Areas **51** : RXD-G51
C : China **I** : Malaysia ⚠ indicates safety critical components.

* New Parts
Parts without **Parts No.** are not supplied.
Les articles non mentionnes dans le **Parts No.** ne sont pas fournis.
Teile ohne **Parts No.** werden nicht geliefert.

13

Ref. No	Add-ress	New Parts	Parts No.	Description				Desti-nation	Re-marks
CN18,19			J13-0075-05	FUSE CLIP				KP	
CN20,21			J13-0075-05	FUSE CLIP				YMI	
CN22,23			J13-0075-05	FUSE CLIP				KP	
CN25,26			J13-0075-05	FUSE CLIP				YMI	
J9,10			J11-0809-05	WIRE CLAMPER					
J13			J11-0809-05	WIRE CLAMPER					
CF301,302			L72-0531-05	CERAMIC FILTER				KPYMIC	
CF301,302			L72-0531-05	CERAMIC FILTER				X	
CF301,302			L72-0536-05	CERAMIC FILTER				TE	
L1,2			L39-0085-05	PHASE COMPENSATION COIL				TE	
L301			L40-1091-17	SMALL FIXED INDUCTOR(1UH)					
L302			L40-1001-17	SMALL FIXED INDUCTOR(10UH,K)				TE	
L303			L40-1091-17	SMALL FIXED INDUCTOR(1UH)					
L304		*	L30-0921-05	FM IFT					
L305			L30-0911-05	AM IFT					
L306			L79-1227-05	LC FILTER				TE	
L307		*	L39-1338-05	COMBINATION COIL				T	
L307		*	L39-1339-05	COMBINATION COIL				KPYMIC	
L307		*	L39-1339-05	COMBINATION COIL				XE	
X301			L77-1122-05	CRYSTAL RESONATOR(7.2MHZ)					
R3,4			RK73EB2B124J	CHIP R	120K	J	1/8W		4,5,51
R3,4			RK73EB2B333J	CHIP R	33K	J	1/8W		3,31
R11			RK73FB2A224J	CHIP R	220K	J	1/10W		
R12			RK73EB2B224J	CHIP R	220K	J	1/8W		
R15 ,16			RK73FB2A224J	CHIP R	220K	J	1/10W		
R17 ,18			RK73FB2A222J	CHIP R	2.2K	J	1/10W		
R19 ,20			RK73FB2A102J	CHIP R	1.0K	J	1/10W		
R21 ,22			RK73FB2A224J	CHIP R	220K	J	1/10W		
R27 ,28			RK73FB2A223J	CHIP R	22K	J	1/10W		
R31 ,32			RK73FB2A103J	CHIP R	10K	J	1/10W		
R35 ,36			RK73FB2A562J	CHIP R	5.6K	J	1/10W		
R37 ,38			RK73FB2A272J	CHIP R	2.7K	J	1/10W		
R41 ,42			RK73FB2A102J	CHIP R	1.0K	J	1/10W		
R43 ,44			RK73FB2A183J	CHIP R	18K	J	1/10W		
R45 ,46			RK73FB2A102J	CHIP R	1.0K	J	1/10W		
R47 ,48			RK73FB2A103J	CHIP R	10K	J	1/10W		
R77 -80			RD14NB2E100J	RD	10	J	1/4W		
R81 -84			RS14KB3DR22J	FL-PROOF RS	0.22	J	2W		
R91 ,92			RD14NB2E4R7J	RD	4.7	J	1/4W		
R93 -96			RD14NB2E681J	RD	680	J	1/4W		
R102,103			RD14NB2E100J	RD	10	J	1/4W		
R104			RK73FB2A102J	CHIP R	1.0K	J	1/10W		
R105			RD14NB2E101J	RD	100	J	1/4W		
R114			RK73EB2B102J	CHIP R	1.0K	J	1/8W		
R115			RK73FB2A621J	CHIP R	620	J	1/10W		
R116			RK73FB2A473J	CHIP R	47K	J	1/10W		
R117			RK73EB2B102J	CHIP R	1.0K	J	1/8W		
R118			RK73FB2A621J	CHIP R	620	J	1/10W		
R121			RK73FB2A473J	CHIP R	47K	J	1/10W		
R122			RK73FB2A751J	CHIP R	750	J	1/10W		
R123			RK73FB2A473J	CHIP R	47K	J	1/10W		
R125			RK73FB2A103J	CHIP R	10K	J	1/10W		
R127,128			RD14NB2E102J	RD	1.0K	J	1/4W		
R130,131			RK73FB2A333J	CHIP R	33K	J	1/10W		

L : Scandinavia **K** : USA **P** : Canada **3** : RXD-G3 **4** : RXD-G4
Y : PX(Far East, Hawaii) **T** : Europe **E** : Europe **5** : RXD-G5 **31** : RXD-G31
Y : AAFES(Europe) **X** : Australia **M** : Other Areas **51** : RXD-G51
C : China **I** : Malaysia ⚠ indicates safety critical components.

* New Parts
Parts without **Parts No.** are not supplied.
Les articles non mentionnes dans le **Parts No.** ne sont pas fournis.
Teile ohne **Parts No.** werden nicht geliefert.

14

Ref. No	Add-ress	New Parts	Parts No.	Description				Desti-nation	Re-marks
R132			RK73FB2A101J	CHIP R	100	J	1/10W		31,51
R133			RK73FB2A225J	CHIP R	2.2M	J	1/10W		31,51
R134			RK73FB2A563J	CHIP R	56K	J	1/10W		31,51
R135,136			RK73FB2A333J	CHIP R	33K	J	1/10W		31,51
R137			RK73FB2A563J	CHIP R	56K	J	1/10W		31,51
R138			RK73FB2A333J	CHIP R	33K	J	1/10W		31,51
R140			RK73FB2A153J	CHIP R	15K	J	1/10W		31,51
R141			RD14NB2E121J	RD	120	J	1/4W		31,51
R142,143			RK73FB2A103J	CHIP R	10K	J	1/10W		31,51
R144-146			RK73FB2A224J	CHIP R	220K	J	1/10W		31,51
R148,149			RK73FB2A101J	CHIP R	100	J	1/10W		
R153			RD14NB2E101J	RD	100	J	1/4W		
R171,172			RS14KB3D102J	FL-PROOF RS	1.0K	J	2W		
R173			RS14KB3A152J	FL-PROOF RS	1.5K	J	1W		
R178			RS14KB3D221J	FL-PROOF RS	220	J	2W		5
R181			RS14KB3D221J	FL-PROOF RS	220	J	2W		
⚠ R184			R92-1769-05	CARBON	3.3M	J	1/2W	KP	
R187,188			RD14NB2E4R7J	RD	4.7	J	1/4W	TE	
R189,190			RS14KB3D102J	FL-PROOF RS	1.0K	J	2W		
R195,196			RK73FB2A101J	CHIP R	100	J	1/10W		3,4,31,51
R195,196			RK73FB2A822J	CHIP R	8.2K	J	1/10W		5
R197			RK73FB2A101J	CHIP R	100	J	1/10W		
R198			RD14NB2E2R2J	RD	2.2	J	1/4W	KP	
R199,200			RK73FB2A103J	CHIP R	10K	J	1/10W		5
R199,200			RK73FB2A224J	CHIP R	220K	J	1/10W		3,4,31,51
R302			RK73FB2A681J	CHIP R	680	J	1/10W		
R303			RK73FB2A331J	CHIP R	330	J	1/10W		
R304			RK73FB2A100J	CHIP R	10	J	1/10W		
R305			RK73FB2A331J	CHIP R	330	J	1/10W		
R306			RK73FB2A332J	CHIP R	3.3K	J	1/10W		
R307			RK73FB2A101J	CHIP R	100	J	1/10W		
R308			RK73FB2A331J	CHIP R	330	J	1/10W		
R311			RK73FB2A103J	CHIP R	10K	J	1/10W		
R312			RK73FB2A392J	CHIP R	3.9K	J	1/10W		
R314			RK73FB2A473J	CHIP R	47K	J	1/10W		
R318			RK73FB2A562J	CHIP R	5.6K	J	1/10W	TE	
R319			RK73FB2A332J	CHIP R	3.3K	J	1/10W	TE	
R320			RK73FB2A222J	CHIP R	2.2K	J	1/10W	TE	
R322			RK73FB2A123J	CHIP R	12K	J	1/10W	KPYMIC	
R322			RK73FB2A123J	CHIP R	12K	J	1/10W	X	
R322			RK73FB2A223J	CHIP R	22K	J	1/10W	TE	
R324			RD14NB2E121J	RD	120	J	1/4W		
R325			RK73FB2A473J	CHIP R	47K	J	1/10W	TE	
R332-334			RK73FB2A102J	CHIP R	1.0K	J	1/10W		
R337			RK73FB2A122J	CHIP R	1.2K	J	1/10W		
R339,340			RK73FB2A102J	CHIP R	1.0K	J	1/10W		
R341			RD14NB2E561J	RD	560	J	1/4W		
R342			RK73FB2A102J	CHIP R	1.0K	J	1/10W	TE	
R342			RK73FB2A103J	CHIP R	10K	J	1/10W	KPYMIC	
R342			RK73FB2A103J	CHIP R	10K	J	1/10W	X	
R344			RK73FB2A222J	CHIP R	2.2K	J	1/10W		
R345			RD14NB2E101J	RD	100	J	1/4W		
R348			RK73FB2A152J	CHIP R	1.5K	J	1/10W	T	
R349			RK73FB2A223J	CHIP R	22K	J	1/10W	T	
R361			RK73FB2A104J	CHIP R	100K	J	1/10W	TE	4,5

L : Scandinavia **K** : USA **P** : Canada **3** : RXD-G3 **4** : RXD-G4
Y : PX(Far East, Hawaii) **T** : Europe **E** : Europe **5** : RXD-G5 **31** : RXD-G31
Y : AAFES(Europe) **X** : Australia **M** : Other Areas **51** : RXD-G51
C : China **I** : Malaysia ⚠ indicates safety critical components.

* New Parts
Parts without **Parts No.** are not supplied.
Les articles non mentionnes dans le **Parts No.** ne sont pas fournis.
Teile ohne **Parts No.** werden nicht geliefert.

15

Ref. No	Add-ress	New Parts	Parts No.	Description				Desti-nation	Re-marks
R362			RK73FB2A473J	CHIP R	47K	J	1/10W	TE	4,5
R363			RK73FB2A683J	CHIP R	68K	J	1/10W	TE	4,5
R365			RK73FB2A102J	CHIP R	1.0K	J	1/10W	TE	4,5
R366			RK73FB2A104J	CHIP R	100K	J	1/10W	TE	4,5
R367			RK73FB2A102J	CHIP R	1.0K	J	1/10W	TE	4,5
R372			RK73FB2A153J	CHIP R	15K	J	1/10W	TE	
R372			RK73FB2A332J	CHIP R	3.3K	J	1/10W	KPYMIC	
R372			RK73FB2A332J	CHIP R	3.3K	J	1/10W	X	
R373,374			RK73FB2A561J	CHIP R	560	J	1/10W	YMIC	
R375,376			RK73FB2A473J	CHIP R	47K	J	1/10W	YMIC	
R381,382			RD14NB2E101J	RD	100	J	1/4W		
R383,384			RK73FB2A103J	CHIP R	10K	J	1/10W		
R385,386			RK73FB2A822J	CHIP R	8.2K	J	1/10W		
R387,388			RK73FB2A473J	CHIP R	47K	J	1/10W		
R389,390			RK73FB2A332J	CHIP R	3.3K	J	1/10W		
R391			RK73FB2A473J	CHIP R	47K	J	1/10W		
R392			RK73FB2A821J	CHIP R	820	J	1/10W		
R393			RK73FB2A102J	CHIP R	1.0K	J	1/10W		
R395			RK73FB2A103J	CHIP R	10K	J	1/10W		
R396			RK73FB2A473J	CHIP R	47K	J	1/10W	T	
R402			RK73FB2A153J	CHIP R	15K	J	1/10W	T	
R403			RK73FB2A105J	CHIP R	1.0M	J	1/10W	T	
R405			RK73FB2A104J	CHIP R	100K	J	1/10W		
R406			RK73FB2A103J	CHIP R	10K	J	1/10W	T	
R407			RD14NB2E221J	RD	220	J	1/4W		
R408			RD14NB2E820J	RD	82	J	1/4W		
R409			RK73FB2A272J	CHIP R	2.7K	J	1/10W		
R423			RK73FB2A103J	CHIP R	10K	J	1/10W	TE	4,5
R424,425			RK73FB2A223J	CHIP R	22K	J	1/10W	TE	4,5
R426			RK73FB2A104J	CHIP R	100K	J	1/10W	TE	4,5
R427			RK73FB2A181J	CHIP R	180	J	1/10W	TE	4,5
R428			RK73FB2A471J	CHIP R	470	J	1/10W	TE	4,5
R429			RK73FB2A681J	CHIP R	680	J	1/10W	TE	4,5
R430			RK73FB2A104J	CHIP R	100K	J	1/10W	TE	4,5
R431			RK73FB2A621J	CHIP R	620	J	1/10W	TE	4,5
R432			RK73FB2A750J	CHIP R	75	J	1/10W	TE	4,5
R433			RK73FB2A122J	CHIP R	1.2K	J	1/10W	TE	4,5
R501			RK73EB2B513J	CHIP R	51K	J	1/8W		4,5
R502			RK73FB2A513J	CHIP R	51K	J	1/10W		4,5
R503,504			RK73FB2A333J	CHIP R	33K	J	1/10W		4,5
VR1	2G		R31-0028-05	VARIABLE RESISTOR					
W401-403			R92-0670-05	CHIP R	0 OHM			KPYMIC	
W401-403			R92-0670-05	CHIP R	0 OHM			XE	
W404			R92-0679-05	CHIP R	0 OHM				
W405			R92-0670-05	CHIP R	0 OHM			TE	4,5
W406			R92-0670-05	CHIP R	0 OHM			KPYMIC	
W406			R92-0670-05	CHIP R	0 OHM			XE	
W407			R92-0670-05	CHIP R	0 OHM				
W408			R92-0679-05	CHIP R	0 OHM				
W409			R92-0670-05	CHIP R	0 OHM			KPYMIC	
W409			R92-0670-05	CHIP R	0 OHM			X	
W410			R92-0670-05	CHIP R	0 OHM				
W414			R92-0679-05	CHIP R	0 OHM				
W500-507			R92-0670-05	CHIP R	0 OHM				
W511,512			R92-0670-05	CHIP R	0 OHM				3,4

L : Scandinavia **K** : USA **P** : Canada **3** : RXD-G3 **4** : RXD-G4
Y : PX(Far East, Hawaii) **T** : Europe **E** : Europe **5** : RXD-G5 **31** : RXD-G31
Y : AAFES(Europe) **X** : Australia **M** : Other Areas **51** : RXD-G51
C : China **I** : Malaysia ⚠ indicates safety critical components.

* New Parts
Parts without **Parts No.** are not supplied.
Les articles non mentionnes dans le **Parts No.** ne sont pas fournis.
Teile ohne **Parts No.** werden nicht geliefert.

16

Ref. No	Add-ress	New Parts	Parts No.	Description		Desti-nation	Re-marks
W513-516			R92-0670-05	CHIP R	0 OHM		5
W518			R92-0670-05	CHIP R	0 OHM		
W600-610			R92-0679-05	CHIP R	0 OHM		
W611,612			R92-0679-05	CHIP R	0 OHM		4,5,51
W613			R92-0679-05	CHIP R	0 OHM		
W614			R92-0679-05	CHIP R	0 OHM		4,5,51
W615			R92-0679-05	CHIP R	0 OHM		
W616			R92-0679-05	CHIP R	0 OHM		
W617			R92-0679-05	CHIP R	0 OHM		4,5,51
W619-624			R92-0679-05	CHIP R	0 OHM		
W625			R92-0679-05	CHIP R	0 OHM		
W626-628			R92-0679-05	CHIP R	0 OHM		
W633			R92-0679-05	CHIP R	0 OHM		
K1		*	S76-0042-05	MAGNETIC RELAY			5
K2		*	S76-0043-05	MAGNETIC RELAY			
S1		*	S62-0055-05	SLIDE SWITCH		YMICXT	3,4,31
S1		*	S62-0055-05	SLIDE SWITCH		E	3,4,31
⚠ S2	2J		S62-0001-05	SLIDE SWITCH		YMI	
S301		*	S62-0056-05	SLIDE SWITCH		YMIC	
D3,4			HSS104A	DIODE			
D3,4			1SS131	DIODE			
D7,8			MA111	DIODE			
D9			MTZJ4.7(B)	ZENER DIODE			
D9			UZ-4.7BSB	ZENER DIODE			
D10 ,11			HSS104A	DIODE			
D10 ,11			1SS131	DIODE			
D12			MTZJ6.2(B)	ZENER DIODE			31,51
D12			UZ-6.2BSB	ZENER DIODE			31,51
D13			MTZJ4.7(B)	ZENER DIODE			
D13			UZ-4.7BSB	ZENER DIODE			
D14			S5688B	DIODE			
D14			1SR139-100	DIODE			
D15 -18			HSS104A	DIODE			
D15 -18			1SS131	DIODE			
D19 ,20			MTZJ15(B)	ZENER DIODE		YMXTE	3
D19 ,20			MTZJ15(B)	ZENER DIODE		IC	31
D19 ,20			MTZJ16(B)	ZENER DIODE		YMICXT	51
D19 ,20			MTZJ18(B)	ZENER DIODE		YMICXT	4
D19 ,20			MTZJ18(B)	ZENER DIODE		E	4
D19 ,20			MTZJ24(B)	ZENER DIODE			5
D19 ,20			MTZJ24(B)	ZENER DIODE		KP	4
D19 ,20			MTZJ30(B)	ZENER DIODE		KP	3
D19 ,20			UZ-15BSB	ZENER DIODE		YMXTE	3
D19 ,20			UZ-15BSB	ZENER DIODE		IC	31
D19 ,20			UZ-16BSB	ZENER DIODE		YMICXT	51
D19 ,20			UZ-18BSB	ZENER DIODE		YMICXT	4
D19 ,20			UZ-18BSB	ZENER DIODE		E	4
D19 ,20			UZ-24BS	ZENER DIODE			5
D19 ,20			UZ-24BS	ZENER DIODE		KP	4
D19 ,20			UZ-30BS	ZENER DIODE		KP	3
D21 ,22			MTZJ10(B)	ZENER DIODE		KP	4,5
D21 ,22			MTZJ11(B)	ZENER DIODE		YMIC	4
D21 ,22			MTZJ13(B)	ZENER DIODE		XTEMIC	4,51
D21 ,22			MTZJ4.7(B)	ZENER DIODE		YMIC	5

L : Scandinavia **K** : USA **P** : Canada **3** : RXD-G3 **4** : RXD-G4
Y : PX(Far East, Hawaii) **T** : Europe **E** : Europe **5** : RXD-G5 **31** : RXD-G31
Y : AAFES(Europe) **X** : Australia **M** : Other Areas **51** : RXD-G51
C : China **I** : Malaysia ⚠ indicates safety critical components.

RXD-G3/G4/G5/G31/G51

PARTS LIST

* New Parts
Parts without **Parts No.** are not supplied.
Les articles non mentionnes dans le **Parts No.** ne sont pas fournis.
*Teile ohne **Parts No.** werden nicht geliefert.*

21

Ref. No	Address	New Parts	Parts No.	Description	Destination	Remarks
R67			RK73FB2A103J	CHIP R 10K J 1/10W		
R68			RK73FB2A223J	CHIP R 22K J 1/10W		
R69			RK73FB2A103J	CHIP R 10K J 1/10W		
R70			RK73FB2A223J	CHIP R 22K J 1/10W		
R72			RK73FB2A103J	CHIP R 10K J 1/10W	YMIC	
R73			RK73FB2A223J	CHIP R 22K J 1/10W	YMIC	
R74			RK73FB2A103J	CHIP R 10K J 1/10W		
R77 ,78			RK73FB2A102J	CHIP R 1.0K J 1/10W		
R82 ,83			RK73FB2A102J	CHIP R 1.0K J 1/10W		
R100,101			RK73FB2A101J	CHIP R 100 J 1/10W		
R103			RK73FB2A102J	CHIP R 1.0K J 1/10W		
R104			RK73FB2A103J	CHIP R 10K J 1/10W		
R105			RK73FB2A104J	CHIP R 100K J 1/10W		
R106			RK73FB2A103J	CHIP R 10K J 1/10W		
R110			RK73FB2A562J	CHIP R 5.6K J 1/10W		
R111			RK73FB2A473J	CHIP R 47K J 1/10W		
R112-115			RK73FB2A101J	CHIP R 100 J 1/10W		
R117-120			RK73FB2A101J	CHIP R 100 J 1/10W		
R122			RK73EB2B331J	CHIP R 330 J 1/8W		
R124			RK73EB2B331J	CHIP R 330 J 1/8W		
R129			RK73FB2A101J	CHIP R 100 J 1/10W		
R130-132			RD14BB2C101J	RD 100 J 1/6W	TE	4,5
R133			RK73FB2A101J	CHIP R 100 J 1/10W		
R150-153			RK73FB2A473J	CHIP R 47K J 1/10W		
R154-160			RK73FB2A104J	CHIP R 100K J 1/10W		
R200			RK73EB2B473J	CHIP R 47K J 1/8W		
W302,303			R92-0679-05	CHIP R 0 OHM		
W305			R92-0679-05	CHIP R 0 OHM		
W307			R92-0679-05	CHIP R 0 OHM		
W308-310			R92-0670-05	CHIP R 0 OHM		
W311			R92-0679-05	CHIP R 0 OHM		
W312-314			R92-0670-05	CHIP R 0 OHM		
W317,318			R92-0670-05	CHIP R 0 OHM		
W319			R92-0679-05	CHIP R 0 OHM		
W320			R92-0679-05	CHIP R 0 OHM		
W322-326			R92-0679-05	CHIP R 0 OHM		
W330			R92-0679-05	CHIP R 0 OHM		
W335			R92-0670-05	CHIP R 0 OHM		
W341			R92-0670-05	CHIP R 0 OHM		
W351			R92-0679-05	CHIP R 0 OHM		
W355			R92-0679-05	CHIP R 0 OHM		
S1-3			S70-0031-05	TACT SWITCH		
S4-6			S70-0031-05	TACT SWITCH		5
S7-32			S70-0031-05	TACT SWITCH		
S33		*	T99-0570-05	ROTARY ENCODER		
D1-4			MA111	DIODE		
D5-10			HSS104A	DIODE		
D5-10			1SS131	DIODE		
D12			MA111	DIODE	TE	
D13			MA111	DIODE	XT	
D14			MA111	DIODE	XYMICE	
D15			MA111	DIODE		51
D16			MA111	DIODE		4,5

L : Scandinavia **K** : USA **P** : Canada **3** : RXD-G3 **4** : RXD-G4
Y : PX(Far East, Hawaii) **T** : Europe **E** : Europe **5** : RXD-G5 **31** : RXD-G31
Y : AAFES(Europe) **X** : Australia **M** : Other Areas **51** : RXD-G51
C : China **I** : Malaysia ⚠ indicates safety critical components.

* New Parts
Parts without **Parts No.** are not supplied.
Les articles non mentionnes dans le **Parts No.** ne sont pas fournis.
Teile ohne **Parts No.** werden nicht geliefert.

22

Ref. No	Address	New Parts	Parts No.	Description	Destination	Remarks
D17			MA111	DIODE		5
D19 -22			HSS104A	DIODE		
D19 -22			1SS131	DIODE		
D23			MA111	DIODE		
D24 -27			HSS104A	DIODE		
D24 -27			1SS131	DIODE		
D32 -34			MA111	DIODE		
D42 ,43			MA111	DIODE		
D44 ,45			HSS104A	DIODE		
D44 ,45			1SS131	DIODE		
D47			HSS104A	DIODE		
D47			1SS131	DIODE		
D48			MA111	DIODE		
D49			HSS104A	DIODE		
D49			1SS131	DIODE		
D52			MTZJ6.8(B)	ZENER DIODE		
D52			UZ-6.8BSB	ZENER DIODE		
D53 -56			HSS104A	DIODE		
D53 -56			1SS131	DIODE		
D71 -74			HSS104A	DIODE		
D71 -74			1SS131	DIODE		
D75			MA111	DIODE	YMIC	
D77			HSS104A	DIODE		
D77			1SS131	DIODE		
D80			HSS104A	DIODE		
D80			1SS131	DIODE		
ED1		*	BJ428GK	INDICATOR TUBE		3,31
ED1		*	FIP10FMW6R	INDICATOR TUBE		4,5,51
IC1		*	M38198MC-069FP	MI-COM IC	KPYMIC	4,5
IC1		*	M38198MC-069FP	MI-COM IC	X	4,5
IC1		*	M38198MC-069FP	MI-COM IC		3,51
IC1		*	M38199MF-051FP	MI-COM IC	TE	4,5
IC2		*	NJU3718L	MOS-IC		
IC3			PST993D-T	ANALOGUE IC		
IC3			S-806D-Z	ANALOGUE IC		
IC4		*	BA3835F	ANALOGUE IC		
Q2,3			2SC4081	TRANSISTOR		
Q8,9			2SC4081	TRANSISTOR		
Q11			2SC4081	TRANSISTOR		
Q12 -22			2SA1576A(R,S)	TRANSISTOR	YMIC	
Q12 -22		*	2SB1218A(Q,R)	TRANSISTOR	YMIC	
Q13 -22			2SA1576A(R,S)	TRANSISTOR	KPXTE	
Q13 -22		*	2SB1218A(Q,R)	TRANSISTOR	KPXTE	
A1	3I		W02-1191-05	ELECTRIC CIRCUIT MODULE		
A1	3I		W02-2537-05	ELECTRIC CIRCUIT MODULE		
RECORD/PLAY BACK UNIT (X28-2770-XX)						
C1,2			CK45FB1H681K	CERAMIC 680PF K		
C3,4			CE04LW1H100M	ELECTRO 10UF 50WV		
C5,6			CK45FB1H391K	CERAMIC 390PF K		
C7,8			CE04LW1C470M	ELECTRO 47UF 16WV		
C9,10			CQ92FM1H153J	MYLAR 0.015UF J		
C11 ,12			CK45FB1H222K	CERAMIC 2200PF K		
C13 -16			CC45FSL1H221J	CERAMIC 220PF J		
C17 ,18			CC45FSL1H221J	CERAMIC 220PF J		3,4

L : Scandinavia **K** : USA **P** : Canada **3** : RXD-G3 **4** : RXD-G4
Y : PX(Far East, Hawaii) **T** : Europe **E** : Europe **5** : RXD-G5 **31** : RXD-G31
Y : AAFES(Europe) **X** : Australia **M** : Other Areas **51** : RXD-G51
C : China **I** : Malaysia ⚠ indicates safety critical components.

RXD-G3/G4/G5/G31/G51

PARTS LIST

∗ New Parts
Parts without **Parts No.** are not supplied.
Les articles non mentionnes dans le **Parts No.** ne sont pas fournis.
Teile ohne **Parts No.** werden nicht geliefert.

23

Ref. No	Address	New Parts	Parts No.	Description			Destination	Remarks
C19 ,20			CK45FB1H681K	CERAMIC	680PF	K		
C21 ,22			CE04LW1H100M	ELECTRO	10UF	50WV		
C23 ,24			CK45FB1H391K	CERAMIC	390PF	K		
C25 ,26			CE04LW1C470M	ELECTRO	47UF	16WV		
C27 ,28			CQ92FM1H223J	MYLAR	0.022UF	J		
C29 ,30			CK45FB1H682K	CERAMIC	6800PF	K		
C31 ,32			CE04LW1HR47M	ELECTRO	0.47UF	50WV		
C33 ,34			CQ92FM1H333J	MYLAR	0.033UF	J		
C35 ,36			CK45FB1H222K	CERAMIC	2200PF	K		
C37 -40			CE04LW1H010M	ELECTRO	1.0UF	50WV		
C41 ,42			CE04LW1H2R2M	ELECTRO	2.2UF	50WV		
C43 ,44			CE04LW1H0R1M	ELECTRO	0.1UF	50WV		
C45 ,46			CE04LW1H100M	ELECTRO	10UF	50WV		
C47 ,48			CE04LW1HR47M	ELECTRO	0.47UF	50WV		
C49 ,50			CE04LW1H010M	ELECTRO	1.0UF	50WV		
C51 ,52			CE04LW1A101M	ELECTRO	100UF	10WV		
C53 ,54			CE04LW1H2R2M	ELECTRO	2.2UF	50WV		
C55 ,56			C91-1436-05	FILM	220PF	J		4,5,51
C57 ,58			C91-1434-05	FILM	150PF	J		4,5,51
C59 -62			CK45FF1H223Z	CERAMIC	0.022UF	Z		4,5,51
C63 ,64			CK45FB1H561K	CERAMIC	560PF	K		4,5,51
C65 ,66			CK45FF1H103Z	CERAMIC	0.010UF	Z		4,5,51
C67 ,68			CE04LW1HR33M	ELECTRO	0.33UF	50WV		4,5,51
C101			CE04LW1H010M	ELECTRO	1.0UF	50WV		
C102			CE04LW1C220M	ELECTRO	22UF	16WV		
C103			CE04LW1C101M	ELECTRO	100UF	16WV		
C104			CE04LW1H0R1M	ELECTRO	0.1UF	50WV		
C105			CQ92FM1H103J	MYLAR	0.010UF	J		
C106			CK45FB2H471K	CERAMIC	470PF	K		
C107			CQ93HP2A103J	MYLAR	0.010UF	J		4,5,51
C107			CQ93HP2A822J	MYLAR	8200PF	J		3,31
C108			CC45FSL2H100D	CERAMIC	10PF	D		4,5,51
C109			CE04LW1H100M	ELECTRO	10UF	50WV		
C110			CQ92FM1H103J	MYLAR	0.010UF	J		
C111,112			CQ92FM1H332J	MYLAR	3300PF	J		3,31
C111,112			CQ92FM1H562J	MYLAR	5600PF	J		4,5,51
C113			CE04LW1H2R2M	ELECTRO	2.2UF	50WV		3,31
C113			CE04LW1V4R7M	ELECTRO	4.7UF	35WV		4,5,51
C114			CK45FF1H103Z	CERAMIC	0.010UF	Z		
C115			CE04LW1C220M	ELECTRO	22UF	16WV		
C116,117			CE04LW1C101M	ELECTRO	100UF	16WV		
C118			CK45FF1H103Z	CERAMIC	0.010UF	Z		
C119			CC45FSL1H271J	CERAMIC	270PF	J		
CN1			E40-3247-05	PIN ASSY	(3P)			
CN2			E40-3249-05	PIN ASSY	(5P)			
CN3 ,4			E40-4609-05	PIN ASSY	(15P)			
CN5			E40-4977-05	PIN ASSY	(5P)			
CN6			E40-4902-05	FLAT CABLE CONNECTOR				
CN7			E40-9813-05	SOCKET FOR PIN ASSY				
E1			J11-0808-05	WIRE CLAMPER				
L1-4			L40-1035-20	SMALL FIXED INDUCTOR,10MH				
L5,6			L79-1201-05	LC FILTER				
L7,8			L32-0547-05	BIAS OSCILLATION COIL				4,5,51

L : Scandinavia **K** : USA **P** : Canada **3** : RXD-G3 **4** : RXD-G4
Y : PX(Far East, Hawaii) **T** : Europe **E** : Europe **5** : RXD-G5 **31** : RXD-G31
Y : AAFES(Europe) **X** : Australia **M** : Other Areas **51** : RXD-G51
C : China **I** : Malaysia ⚠ indicates safety critical components.

∗ New Parts
Parts without **Parts No.** are not supplied.
Les articles non mentionnes dans le **Parts No.** ne sont pas fournis.
Teile ohne **Parts No.** werden nicht geliefert.

24

Ref. No	Address	New Parts	Parts No.	Description				Destination	Remarks
L9			L32-0542-05	BIAS OSCILLATION COIL					3,31
L9			L32-0570-05	BIAS OSCILLATION COIL					4,5,51
R120			RD14NB2E100J	RD	10	J	1/4W		
R165			RD14NB2E100J	RD	10	J	1/4W		
VR1 ,2			R32-0031-05	TRIMMING POT					
VR3 ,4			R32-0030-05	TRIMMING POT					
VR5 ,6			R32-0041-05	TRIMMING POT					3,31
VR7 -9			R32-0036-05	TRIMMING POT					4,5,51
VR9			R12-1619-05	TRIMMING POT					3,31
K1			S51-2089-05	IC					
K1			S76-0018-05	MAGNETIC RELAY					
D1,2			HSS104	DIODE					
D1,2			1SS133	DIODE					
D4-6			HSS104	DIODE					
D4-6			1SS133	DIODE					
D7			MTZJ2.7(B)	ZENER DIODE					
D7			UZ-2.7BSB	ZENER DIODE					
IC1 ,2			TA8125S	IC(2CH PRE AMP)					
IC3			HA12182F	IC(DOLBY B IC)					
IC4			UPC1297CA	IC(DOL HX PRO SYSTEM)					4,5,51
IC5			BA10393	IC(DUAL COMPARATOR)					
IC6 ,7			BU4094BC	IC(8-STAGE/STORE REGISTER)					
Q1,2			DTC124ES	TRANSISTOR					
Q1,2			UN4212	TRANSISTOR					
Q51			DTC124ES	TRANSISTOR					
Q51			UN4212	TRANSISTOR					
Q52			2SC1740S(Q,R)	TRANSISTOR					
Q52			2SC2785(F,E)	TRANSISTOR					
Q54 ,55			2SC1845(F,E)	TRANSISTOR					
Q56 ,57			2SC1740S(Q,R)	TRANSISTOR					
Q56 ,57			2SC2785(F,E)	TRANSISTOR					
Q58			2SC3940A(R,S)	TRANSISTOR					
Q59			2SC1740S(Q,R)	TRANSISTOR					
Q59			2SC2785(F,E)	TRANSISTOR					
Q60			2SA992(F,E)	TRANSISTOR					
Q61			DTC124ES	TRANSISTOR					
Q61			UN4212	TRANSISTOR					
Q63 -65			2SC3246	TRANSISTOR					
CD PLAYER UNIT (X32-3120-10)									
C1			CQ92FM1H103J	MYLAR	0.010UF	J			
C2			CQ92FM1H472J	MYLAR	4700PF	J			
C3			CC45FSL1H470J	CERAMIC	47PF	J			
C4			CF92FV1H474J	MF-C	0.47UF	J			
C5			CE04LW1H100M	ELECTRO	10UF	50WV			
C6			CQ92FM1H104J	MYLAR	0.10UF	J			
C7			CE04HW1H2R2M	NP-ELEC	2.2UF	50WV			
C8			CQ92FM1H104J	MYLAR	0.10UF	J			
C9			CQ92FM1H333J	MYLAR	0.033UF	J			
C10			CC45FSL1H101J	CERAMIC	100PF	J			
C11			CQ92FM1H102J	MYLAR	1000PF	J			
C12			CC45FSL1H221J	CERAMIC	220PF	J			
C13			CQ92FM1H473J	MYLAR	0.047UF	J			
C14			CE04LW1H100M	ELECTRO	10UF	50WV			

L : Scandinavia **K** : USA **P** : Canada **3** : RXD-G3 **4** : RXD-G4
Y : PX(Far East, Hawaii) **T** : Europe **E** : Europe **5** : RXD-G5 **31** : RXD-G31
Y : AAFES(Europe) **X** : Australia **M** : Other Areas **51** : RXD-G51
C : China **I** : Malaysia ⚠ indicates safety critical components.

∗ New Parts
Parts without **Parts No.** are not supplied.
Les articles non mentionnes dans le **Parts No.** ne sont pas fournis.
*Teile ohne **Parts No.** werden nicht geliefert.*

25

Ref. No	Address	New Parts	Parts No.	Description	Destination	Remarks
C15			CE04HW1E100M	NP-ELEC 10UF 25WV		
C16 -18			CQ92FM1H103J	MYLAR 0.010UF J		
C19			CQ92FM1H333J	MYLAR 0.033UF J		
C20			CE04LW0J331M	ELECTRO 330UF 6.3WV		
C21 ,22			CK45FF1H103Z	CERAMIC 0.010UF Z		
C23			CF92FV1H224J	MF-C 0.22UF J		
C24 ,25			CE04LW1A101M	ELECTRO 100UF 10WV		
C26			CC45FSL1H270J	CERAMIC 27PF J		
C27			CQ92FM1H103J	MYLAR 0.010UF J		
C28			CQ92FM1H333J	MYLAR 0.033UF J		
C29			CQ92FM1H103J	MYLAR 0.010UF J		
C30			CQ92FM1H222J	MYLAR 2200PF J		
C35 ,36			CE04HW1H010M	NP-ELEC 1.0UF 50WV		
C37			CK45FF1H103Z	CERAMIC 0.010UF Z		
C38			CQ92FM1H332J	MYLAR 3300PF J		
C39			CK45FF1H103Z	CERAMIC 0.010UF Z		
C40			CQ92FM1H473J	MYLAR 0.047UF J		
C41			CQ92FM1H152J	MYLAR 1500PF J		
C42			CQ92FM1H103J	MYLAR 0.010UF J		
C43			CE04LW1HR47M	ELECTRO 0.47UF 50WV		
C44			CK45FF1H103Z	CERAMIC 0.010UF Z		
C45			CE04LW0J331M	ELECTRO 330UF 6.3WV		
C46			CK45FF1H103Z	CERAMIC 0.010UF Z		
C55			CE04LW0J331M	ELECTRO 330UF 6.3WV		
C56			CE04LW1A331M	ELECTRO 330UF 10WV		
C57 ,58			CC45FSL1H221J	CERAMIC 220PF J		
C59 -62			CK45FB1H391K	CERAMIC 390PF K		
C63 ,64			CQ92FM1H222J	MYLAR 2200PF J		
C65 ,66			CE04LW1HR47M	ELECTRO 0.47UF 50WV		
C67			CE04LW1A101M	ELECTRO 100UF 10WV		
C68 ,69			CE04LW1A471M	ELECTRO 470UF 10WV		
C70			CE04LW1HR47M	ELECTRO 0.47UF 50WV		
C71			CE04LW1A470M	ELECTRO 47UF 10WV		
C72			CE04LW1C470M	ELECTRO 47UF 16WV		
C73			CK45FF1H223Z	CERAMIC 0.022UF Z		
C74 ,75			CE04LW1H100M	ELECTRO 10UF 50WV		
C76			CK45FB1H102K	CERAMIC 1000PF K		
C77			CC45FSL1H271J	CERAMIC 270PF J		
C79 -81			CK45FF1H223Z	CERAMIC 0.022UF Z		
C82			CK45FF1H103Z	CERAMIC 0.010UF Z		
C83			CC45FSL1H470J	CERAMIC 47PF J		
C84			CK45FF1H103Z	CERAMIC 0.010UF Z		
CN1			E40-4856-05	FLAT CABLE CONNECTOR		
CN2			E40-4876-05	PIN ASSY		
CN3			E40-4377-05	PIN ASSY		
CN4			E40-4763-05	PIN ASSY		
CN5			E40-3247-05	PIN ASSY		
CN6			E40-4762-05	PIN ASSY		
CN7			E40-3256-05	PIN ASSY		
CN8			E40-3259-05	PIN ASSY		
E1,2			J11-0098-05	WIRE CLAMPER		
E4,5			J11-0098-05	WIRE CLAMPER		
L1			L40-1001-17	SMALL FIXED INDUCTOR(10UH,K)		

L : Scandinavia **K** : USA **P** : Canada **3** : RXD-G3 **4** : RXD-G4
Y : PX(Far East, Hawaii) **T** : Europe **E** : Europe **5** : RXD-G5 **31** : RXD-G31
Y : AAFES(Europe) **X** : Australia **M** : Other Areas **51** : RXD-G51
C : China **I** : Malaysia ⚠ indicates safety critical components.

∗ New Parts
Parts without **Parts No.** are not supplied.
Les articles non mentionnes dans le **Parts No.** ne sont pas fournis.
Teile ohne **Parts No.** werden nicht geliefert.

26

Ref. No	Address	New Parts	Parts No.	Description	Destination	Remarks
X1			L78-0299-05	RESONATOR (16.93M)		
R97			RD14NB2E2R2J	RD 2.2 J 1/4W		
VR1		∗	R32-0037-05	SEMI FIXED VARIABLE RESISTOR		
VR2		∗	R32-0039-05	SEMI FIXED VARIABLE RESISTOR		
VR3		∗	R32-0040-05	SEMI FIXED VARIABLE RESISTOR		
D1-6			HSS104	DIODE		
D1-6		∗	1SS133	DIODE		
D7			MTZJ3.3(B)	ZENER DIODE		
D7			UZ-3.3BSB	ZENER DIODE		
IC1			CXA1782BQ ∗1	ANALOGUE IC		
IC2		∗	CXD2508AQ ∗1	MOS-IC		
IC3		∗	LA6537	ANALOGUE IC		
IC4 ,5			TA8409S	IC(MOTOR CONTROL)		
IC6			BU4094BC	MOS-IC		
IC7			NJM2100D	ANALOGUE IC		
IC8			M5237L	ANALOGUE IC		
IC9			TC74HC166AP	IC(8BIT SHIFT REGISTER)		
Q1			2SC1740S(Q,R)	TRANSISTOR		
Q1			2SC2785(F,E)	TRANSISTOR		
Q2			2SA954(L,K)	TRANSISTOR		
Q3			DTA124ES	DIGITAL TRANSISTOR		
Q3			UN4112	TRANSISTOR		
Q4			2SA954(L,K)	TRANSISTOR		
Q5			2SC1740S(Q,R)	TRANSISTOR		
Q5			2SC2785(F,E)	TRANSISTOR		
Q6			2SA1286	TRANSISTOR		
Q7			DTC124ES	DIGITAL TRANSISTOR		
Q7			UN4212	TRANSISTOR		
Q8			2SB1375	TRANSISTOR		
Q8			2SB1565(E,F)	TRANSISTOR		
Q9,10			2SA1175(F,E)	TRANSISTOR		
Q9,10			2SA933S(Q,R)	TRANSISTOR		
Q11 ,12			2SC2878(B)	TRANSISTOR		
Q13			DTC124ES	DIGITAL TRANSISTOR		
Q13			UN4212	TRANSISTOR		
CD MECHANISM (D40-1455-05)						
101	3B		A10-3119-08	CHASSIS (MAIN)		
102	3A		A15-0089-08	FRAME (MD-B)		
105	2A		D10-3533-08	SLIDER (LIFT)		
107	2B		D10-3459-08	LEVER (LOCK)		
108	2A		D10-3638-08	LEVER (BRAKE)		
109	2B		D10-3496-08	FRICTION ARM ASSY		
110	2A		D10-3606-08	FEED SHAFT		
113	1A		D13-1599-08	GEAR (IDLER)		
114	2B		D13-1600-08	GEAR (LOAD)		
115	2B		D13-1601-08	GEAR (CENTER)		
117	3A		D13-1603-08	CAM GEAR(UP/DOWN)		
118	1A		D13-1604-08	GEAR (HELICAL)		
119	2A		D13-1720-08	GEAR		
120	2B,3B		D14-0361-08	ROLLER (TRAY)		
122	2B		D15-0366-08	PULLEY (LOAD)		
123	2B		D16-0363-08	DRIVE BELT		
125	2B		D21-1762-08	SHAFT (PULLEY)		

L : Scandinavia **K** : USA **P** : Canada **3** : RXD-G3 **4** : RXD-G4
Y : PX(Far East, Hawaii) **T** : Europe **E** : Europe **5** : RXD-G5 **31** : RXD-G31
Y : AAFES(Europe) **X** : Australia **M** : Other Areas **51** : RXD-G51
C : China **I** : Malaysia ⚠ indicates safety critical components.

RXD-G3/G4/G5/G31/G51

PARTS LIST

* New Parts
Parts without **Parts No.** are not supplied.
Les articles non mentionnes dans le **Parts No.** ne sont pas fournis.
Teile ohne **Parts No.** werden nicht geliefert.

27

Ref. No	Add-ress	New Parts	Parts No.	Description		Desti-nation	Re-marks
132	1I		E35-0811-08	3P WIRE			
133	1I		E35-1184-08	6P WIRE			
134	1I		E35-1185-08	6P FLAT WIRE			
135	1I		E35-1186-08	6P WIRE (TU-D)			
136	1I		E35-1187-08	16P FFC			
137	3A		E40-3264-05	CONNECTOR			
140	1A		F07-0773-08	COVER	(TRAY)		
141	2A		F07-0736-08	COVER			
142	1B	*	F07-0770-08	COVER			
145	3A		G01-3806-08	SPRING	(MD-G)		
146	3A		G01-3807-08	SPRING	(MD-H)		
148	3A		G01-3663-08	SPRING	(CAM)		
149	2B		G01-3664-08	SPRING	(LOCK)		
150	2A		G01-3665-08	SPRING	(BRAKE)		
151	2A		G01-3768-08	SPRING	(LEFT)		
152	1A,1B		G16-0821-04	SHEET	(TRAY)		
153	3B		G16-0856-08	FILAMENT TAPE			
155	2A		J02-1133-08	INSULATOR			
156	2B	*	J11-0813-08	CLAMPER			
157	1B		J19-3758-08	BRACKET (CLAMP)			
158	2B		J19-3660-08	BRACKET (GEAR)			
159	2B,3B		J19-3661-08	BRACKET (TRAY)			
160	3A		J61-0081-05	SK BINDER	SKB-100		
161	1A		J99-0541-08	TRAY	(SLIDE)		
162	1A		J99-0542-08	TRAY	(ROTARY)		
L			N09-2658-08	SCREW			
M			N09-3053-08	SCREW			
N			N09-3107-08	SCREW			
P			N09-3140-08	SCREW			
Q			N09-3141-08	SCREW			
165	2B		S33-2061-05	LEVER SWITCH			
166	1A,2A		S64-0015-08	LEVER SWITCH	JPS1220-0201		
167	3A		S74-0038-08	LEAF SWITCH			
171	1B		T99-0544-05	MAGNET			
DM	3A		A11-1082-08	TT CHASSIS ASSY			
FM	3A		T42-0817-08	MOTOR GEAR (FEED)			
LM	3B		T42-0682-08	MOTOR PULLEY ASSY			
PU	3A		T25-0041-05	PICKUP (KSS-213B/S-N)			
RTM	2B		T42-0683-08	MOTOR WORM ASSY			
CASSETTE DECK MECHANISM (D40-1453-05 : RXD-G3/G31 D40-1458-05 :RXD-G4/G5/G51)							
401	2C,3D		A10-3174-08	HEAD CHASSIS			
403	1D,3E		A10-3240-08	CHASSIS OUTSERT ASSY			
404	1D,2E		D01-0184-08	FLYWHEEL (LW) ASSY			
405	1E		D01-0185-08	FLYWHEEL (A) ASSY			
406	2F		D01-0186-08	FLYWHEEL (B) ASSY			
407	1C		D10-3468-18	INTER LOCK ARM (L)(A DECK)			
408	3F		D10-3469-18	INTER LOCK ARM (R)(B DECK)			
409	2D,3F		D10-3470-08	TRIGGER ARM			
410	2D,3F		D10-3471-18	HEAD CHANGE ARM			
412	1C		D10-3476-18	EJECT LEVER (L) (A DECK)			
413	3E		D10-3477-18	EJECT LEVER (R) (B DECK)			
414	2C,3D		D10-3478-08	SELET LEVER			
415	1D,2E		D10-3479-08	SHIFT LEVER			

L : Scandinavia **K** : USA **P** : Canada **3** : RXD-G3 **4** : RXD-G4
Y : PX(Far East, Hawaii) **T** : Europe **E** : Europe **5** : RXD-G5 **31** : RXD-G31
Y : AAFES(Europe) **X** : Australia **M** : Other Areas **51** : RXD-G51
C : China **I** : Malaysia ⚠ indicates safety critical components.

* New Parts
Parts without **Parts No.** are not supplied.
Les articles non mentionnes dans le **Parts No.** ne sont pas fournis.
Teile ohne **Parts No.** werden nicht geliefert.

28

Ref. No	Add-ress	New Parts	Parts No.	Description		Desti-nation	Re-marks
416	2C,3D		D10-3480-08	C/R LEVER			
420	3C		D13-0981-08	ROTATION GEAR			
421	1C,2D		D13-1616-08	REW GEAR			
422	2C,2D		D13-1617-08	REEL GEAR			
423	1D,2F		D13-1618-08	IDLER GEAR			
424	3C,3D		D13-1621-08	RETURN GEAR			
425	1D,2E		D13-1622-18	CAM GEAR			
426	2D,3E		D14-0367-08	PINCH ARM (R) ASSY			
427	2C,3D		D14-0368-08	PINCH ARM (L) ASSY			
428	1D,2F		D15-0369-08	IDLER PULLEY			
429	2F		D16-0393-08	DRIVE BELT (BW)			
430	1E		D16-0392-08	DRIVE BELT (AW)			
431	1E		D15-0387-08	PULLEY (A)			
432	1E,2F		D16-0391-08	CLUTCH BELT			
433	2C,3D		D19-0270-18	REEL CAP (A)			
434	1C,1E		D19-0287-18	CLUTCH ARM ASSY			
439	1E,1F		E35-0396-08	15P FLAT RIBBON WIRE			
440	3C		E35-1242-08	3P HEAD WIRE ASSY	(A DECK)		
441	3C		E35-1243-08	5P,HEAD WIRE ASSY	(B DECK)		
442	1F		E35-0986-08	MOTOR WIRE			
443	3C		G01-3790-08	EARTH SPRING (B)			
444	2D,3F		G01-3712-18	HEAD CHANGE ARM SP			
445	2C,3D		G01-3709-08	B.T SPRING			
446	1C,2D		G01-3710-08	SHIFT LEVER SP			
447	2D,3F		G01-3711-18	TRIGGER ARM SP			
448	2E,3D		G01-3720-08	HEAD RETURN PLAY SP			
449	1C,3F		G01-3713-08	EJECT SP			
450	2C,3D		G01-3714-08	C/R LEVER SP			
451	2C,3D		G01-3715-08	SELECT LEVER SP			
452	2C,3D		G01-3716-08	SHIFT SP			
453	1C		G01-3717-08	INTER LOCK SP (L)			
454	3C,3D		G01-3718-08	RETURN SP			
455	3C,3D		G01-3719-08	FWD SP			
456	2D,3F		G01-3723-08	INTER LOCK SP (R)			
457	2C,3D		G01-3739-08	HEAD CHASSIS SP			
458	2D,3E		G01-3721-08	BRAKE SP (R)			
459	1C,2E		G01-3722-08	BRAKE SP (L)			
460	1C,2E		G01-3724-08	CLUTCH ARM SPRING (B)			
461	1D,2E		G01-3725-08	CLUTCH SP			
462	1C,2D		G02-0913-08	PACK SPRING			
463	3C		G02-1068-08	AZIMUTH SP (B)			
464	2C,3D		G02-1071-08	LIFT BKT			
465	3C		G11-2100-08	HEAD WIRE CLAMP			
466	1D,2F		G11-2205-08	TUBE			
467	2D,3E		G16-0791-08	REFLECT SEAL			
469	3C		J21-6184-08	HEAD PLATE ASSY			
470	1E,2F		J19-3652-08	CABLE HOLDER			
471	2C,3D		J21-6135-08	HEAD RETURN PLATE			
472	1D		J21-6307-08	BKT (B) ASSY			
473	2D		J21-6308-08	MECHA BKT			
474	2C,3D		J42-0183-08	REEL BUSH			
475	2D,3E		J69-0086-08	FILAMENT TAPE			
476	3C,3D		J39-0188-08	HEAD BASE			
477	2C,3D		J90-0832-08	SHIFT SPRING GUIDE			

L : Scandinavia **K** : USA **P** : Canada **3** : RXD-G3 **4** : RXD-G4
Y : PX(Far East, Hawaii) **T** : Europe **E** : Europe **5** : RXD-G5 **31** : RXD-G31
Y : AAFES(Europe) **X** : Australia **M** : Other Areas **51** : RXD-G51
C : China **I** : Malaysia ⚠ indicates safety critical components.

RXD-G3/G4/G5/G31/G51

PARTS LIST

∗New Parts
Parts without **Parts No.** are not supplied.
Les articles non mentionnes dans le **Parts No.** ne sont pas fournis.
Teile ohne **Parts No.** werden nicht geliefert.

29

Ref. No	Add-ress	New Parts	Parts No.	Description	Desti-nation	Re-marks
AA			N19-1316-08	POLY WASHER		
AB			N19-1354-08	POLY WASHER		
AC			N19-1288-08	POLY WASHER		
AD			N19-1355-08	NYLON WASHER		
AE			N19-1385-08	POLY WASHER		
AF			N19-1386-08	POLY WASHER		
AG			N19-1387-08	TEFLON WASHER		
AH			N19-1388-08	POLY WASHER		
AK			N19-1035-08	POLY WASHER		
AL			N19-1396-08	POLY WASHER		
AM			N19-1384-08	POLY WASHER		
S			N09-1497-08	TAP TITE SCREW		
T			N09-2871-08	TAPPING SCREW		
U			N09-2876-08	HEAD SCREW (RVS)		
V			N09-3135-08	BIND TAP TITE SCREW		
W			N09-3195-08	TAP TITE SCREW		
Y			N09-2901-08	BIND TAP TITE SCREW		
Z			N09-3112-08	AZIMUTH SCREW		
480	1E,2F		S74-0033-08	REC SWITCH		
481	1E,2F		S74-0042-08	PLAY SWITCH		
484	1E,2F		T94-0233-08	SOLENOID ASSY		
485	1E,2F		T95-0125-08	PHOTO INTERRUPTER		
MM	2F		T42-0813-08	MOTOR ASSY		
PH	2C		T31-0066-08	PLAYBACK HEAD MK10P-AB215		
RPEH	3C		T31-0020-08	R/P ERASE HEAD YK56R-AA405		

L : Scandinavia **K** : USA **P** : Canada **3** : RXD-G3 **4** : RXD-G4
Y : PX(Far East, Hawaii) **T** : Europe **E** : Europe **5** : RXD-G5 **31** : RXD-G31
Y : AAFES(Europe) **X** : Australia **M** : Other Areas **51** : RXD-G51
C : China **I** : Malaysia ⚠ indicates safety critical components.

RXD-G3/G4/G5/G31/G51

SPECIFICATIONS

Main unit (RXD-G3)

[Amplifier section]

Rated power output

50 watts per channel minimum RMS, both channels driven, at 6 Ω from 40 Hz to 15 kHz with no more than 0.5 % total harmonic distortion. (FTC)

Input sensitivity / impedance
- AUX ..... 200 mV / 47 kΩ
- MIC ..... 2.1 mV / 2.2 kΩ

Signal to noise ratio
- AUX ..... 86 dB (IHF'66)

[FM Tuner section]

Tuning frequency range ..... 87.5 MHz ~ 108 MHz

[AM Tuner section]

Tuning frequency range ..... 530 kHz ~ 1,700 kHz

[Cassette deck section]

Track ..... 4-track, 2-channel stereo

Recording system ..... AC bias system (Frequency: 105 kHz)

Heads
- A deck Playback head 1
- B deck Playback / recording head 1
- Erasing head 1

Motors 1

Fast winding time ..... Approx. 120 seconds (C-60 tape)

[CD player section]

Laser ..... Semiconductor laser

Playing rotation ..... 200 rpm ~ 500 rpm (CLV)

Wow & Flutter ..... Unmeasurable Limit

General

Power consumption ..... 150 W

Dimensions ..... W: 270 mm (10-5/8")
H: 305 mm (12")
D: 342 mm (13-7/16")

Weight (net) ..... 8.8 kg (19.4 lb)

Main unit (RXD-G4)

[Amplifier section]

Rated power output

70 watts per channel minimum RMS, both channels driven, at 6 Ω from 40 Hz to 15 kHz with no more than 0.5 % total harmonic distortion. (FTC)

Input sensitivity / impedance
- AUX ..... 200 mV / 47 kΩ
- MIC ..... 2.1 mV / 2.2 kΩ

Signal to noise ratio
- AUX ..... 86 dB (IHF'66)

[FM Tuner section]

Tuning frequency range ..... 87. 5MHz ~108 MHz

[AM Tuner section]

Tuning frequency range ..... 530 kHz ~1,700 kHz

[Cassette deck section]

Track ..... 4-track, 2-channel stereo

Recording system ..... AC bias system (Frequency : 105 kHz)

Heads
- A deck Playback head 1
- B deck Playback / recording head 1
- Erasing head 1

Motors 1

Fast winding time ..... Approx.120 seconds (C-60 tape)

[CD player section]

Laser ..... Semiconductor laser

Playing rotation ..... 200 rpm ~ 500 rpm (CLV)

Wow & Flutter ..... Unmeasurable Limit

General

Power consumption ..... 180 W

Dimensions ..... W: 270 mm (10-5/8")
H: 305 mm (12")
D: 342 mm (13-7/16")

Weight (net) ..... 9.4 kg (20.7lb)

SPECIFICATIONS

Main unit (RXD-G5)

[Amplifier section]

Rated power output

STEREO MODE

70 watts per channel minimum RMS, both channels driven, at 6 Ω from 40 Hz to 15 kHz with no more than 0.5 % total harmonic distortion.

SURROUND MODE

CENTER.....15 W (1 kHz, 8 Ω,10 % T.H.D.)

REAR.....10 W +10 W (1 kHz, 8 Ω,10 % T.H.D.)

Input sensitivity / Impedance

AUX..... 200 mV / 47 kΩ

MIC .....2.1 mV / 2.2kΩ

Signal to noise ratio

AUX ..... 86 dB (IHF'66)

[FM Tuner section]

Tuning frequency range .....87.5 MHz ~ 108 MHz

[AM Tuner section]

Tuning frequency range .....530 kHz ~ 1,700 kHz

[Cassette deck section]

Track .....4-track, 2-channel stereo

Recording system .....AC bias system (Frequency : 105kHz)

Heads

A deck Playback head 1

B deck Playback / recording head 1

Erasing head.....1

Motors.....1

Fast winding time ..... Approx. 120 seconds (C-60 tape)

[CD player section]

Laser .....Semiconductor laser

Playing rotation .....200 rpm ~ 500 rpm (CLV)

Wow & Fluter .....Unmeasurable Limit

General

Power consumption .....180 W

Dimensions .....W: 270 mm (10-5/8")

H: 305 mm (12")

D: 342 mm (13-3/8")

Weight (net) .....10.2 kg (22.5 lb)

UD COMPONENT SYSTEM/COMPACT HI-FI SYSTEM

RXD-F3/F4/F41/F42

SERVICE MANUAL

(UD-303/403/413/433/523/533)

KENWOOD

© 1995-8 PRINTED IN KOREA

B51-5091-00 (K) 4180

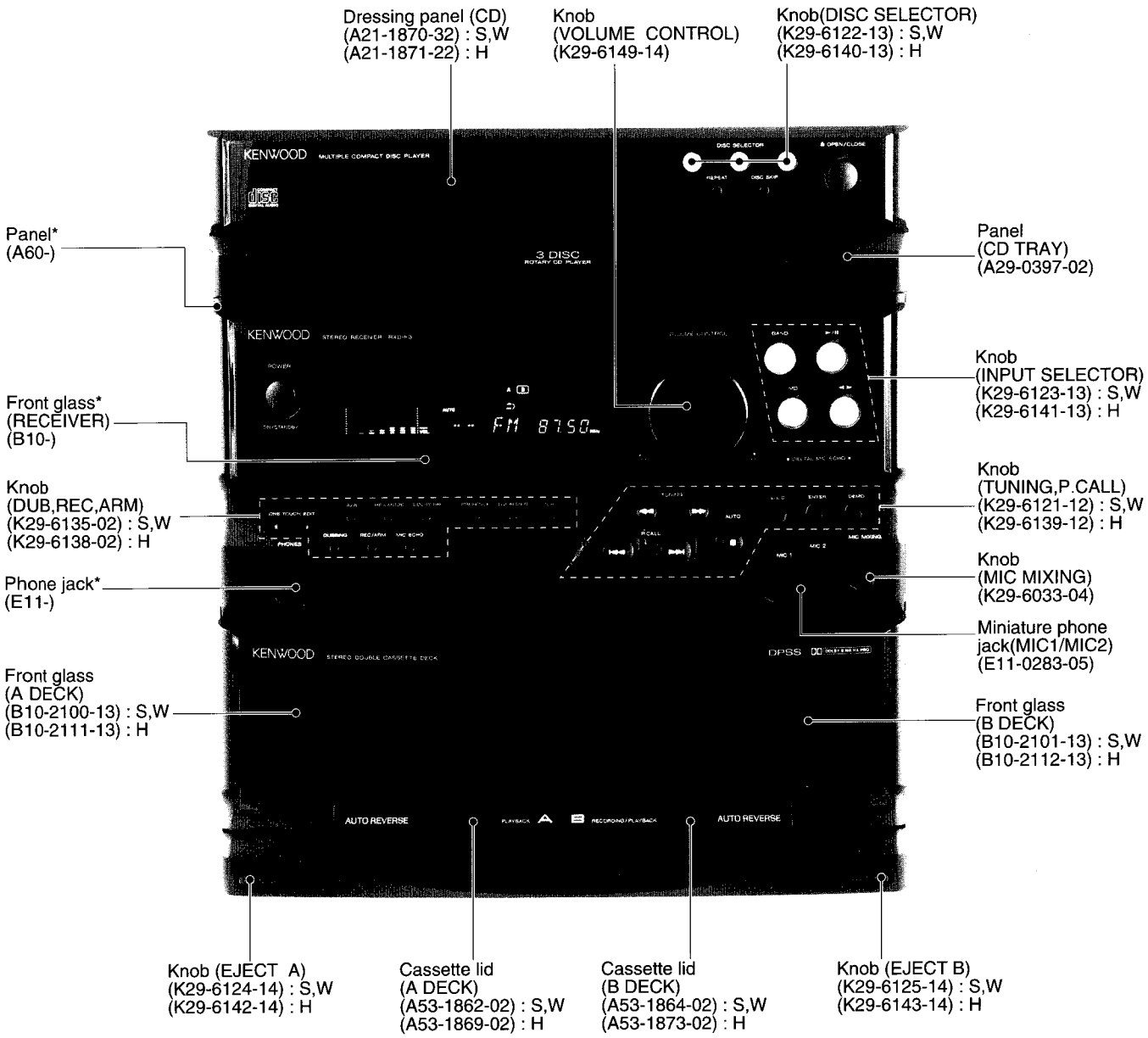

Photo is RXD-F3 M type. (It's like RXD-F41)

S:SINGAPORE made

W:MALAYSIA made

H:HUIZHOU made

***Refer to parts list on page 79.**

In compliance with Federal Regulations, following are reproductions of labels on, or inside the product relating to laser product safety.

KENWOOD-Corp. certifies this equipment conforms to DHHS Regulations No. 21 CFR 1040. 10, Chapter 1, Subchapter J.

DANGER : Laser radiation when open and interlock defeated. AVOID DIRECT EXPOSURE TO BEAM.

PRECAUTIONS FOR REPAIR

- For the operation of the CD and the cassette (A or B deck) mechanism,see Service Manual(B51-4869-00) of RXD-C3/C3L.

RXD-F3/F4/F41/F42

CONTENTS / ACCESSORIES

Contents

ACCESSORIES 2
EXTERNAL VIEW 3
DISASSEMBLY FOR REPAIR 7
BLOCK DIAGRAM 11
CIRCUIT DESCRIPTION 13
ADJUSTMENT
CD section 31
CASSETTE DECK section 33
TUNER section 34
AJUSTES
CD sección 36
CASSETTE DECK sección 37
TUNER sección 38
WIRING DIAGRAM 39
PC BOARD 41
SCHEMATIC DIAGRAM 49
CASSETTE MECHANISM DESCRIPTION 73
EXPLODED VIEW (CD MECHANISM) 74
EXPLODED VIEW
(CASSETTE DECK MECHANISM) 75
EXPLODED VIEW (UNIT) 77
PARTS LIST 79
SPECIFICATIONS .....Back cover

IC description, refer to circuit description of the service manual.

PCB No.	Ref. No.	IC Parts No.	Function	Service manual	On page
X09	IC302	**LC7218**	PLL, IF COUNT	**T-7J**	P15
X28	IC4	**UPC1297CA**	HX-PRO	**KX-1100EX**	P12
X32	IC1	**CXA1782BQ**	RF/SERVO	**DP-ME9**	P9

Accessories

AM loop antenna .....(1)
(T90-0195-05)

Loop antenna stand (1)
(J19-3645-05)

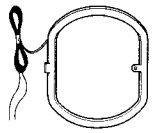

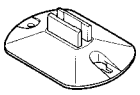

Antenna Adaptor.....(1)
(For U.K. and Europe)
(T90-0198-05)or
(T90-0801-05)

AC plug adaptor.....(1)
(Except for the U.S.A., Canada,Mexico,Europe, U.K. and Australia)
(E03-0115-05)

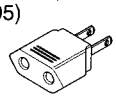

FM indoor antenna .....(1)
(T90-0182-15)

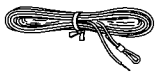

Batteries (R6/AA).....(2)

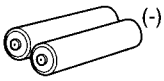

Remote control unit .....(1)
(A70-1020-05) : RC-F3 (RXD-F3/F41/F42)
(A70-1018-05) : RC-F4 (RXD-F4)

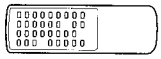

(BATTERY COVER : A09-0170-08)

For the unit with a European AC plug in areas other than Europe.
Refer to **LS-F41** of service manual (B51-5063-00) about them.

System configuration

SYSTEM NAME	MAIN UNIT	SPEAKERS	OVER CARTON		SPACER	
UD-303	RXD-F3/L	LS-F3	(K) H60-0320-04	(P,R) H60-0319-04	(K) ①H12-2247-04 ②H12-2248-04	(P,R) ①H12-2241-04 ②H12-2243-04
(K,P,R,M,Y,X) UD-403	RXD-F4	LS-F3 (K)addition CRS-03	(K) H60-0338-04	(P,R,M,Y,X) H60-0337-04	(K) ①H12-2246-04 ③H12-2248-04	(P,R) ①H12-2241-04 ②H12-2243-04
(E,T,G) UD-403	RXD-F4/L	LS-F4				
UD-413	RXD-F41	LS-F41	(K) H60-0341-04	(P,R) H60-0340-04	(K,P,R) ①H12-2257-04 ②H12-2256-04	
UD-433	RXD-F3	LS-F3	(M,Y,X) H60-0346-04		(M,Y,X) ①H12-2241-04 ②H12-2243-04	
UD-523	RXD-F42	LS-F4	(M) H60-0318-04		①H12-2244-04	
UD-533	RXD-F4	LS-F4	(M,Y,X) H60-0345-04		①H12-2244-04	

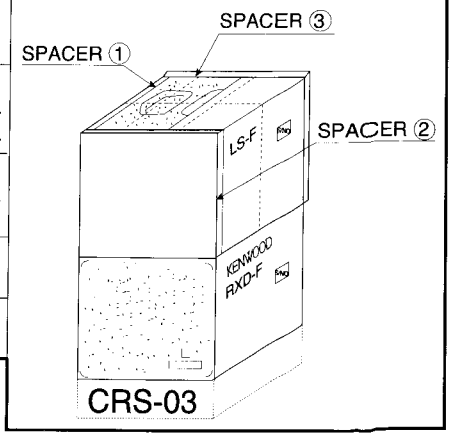

EXTERNAL VIEW / CAUTION

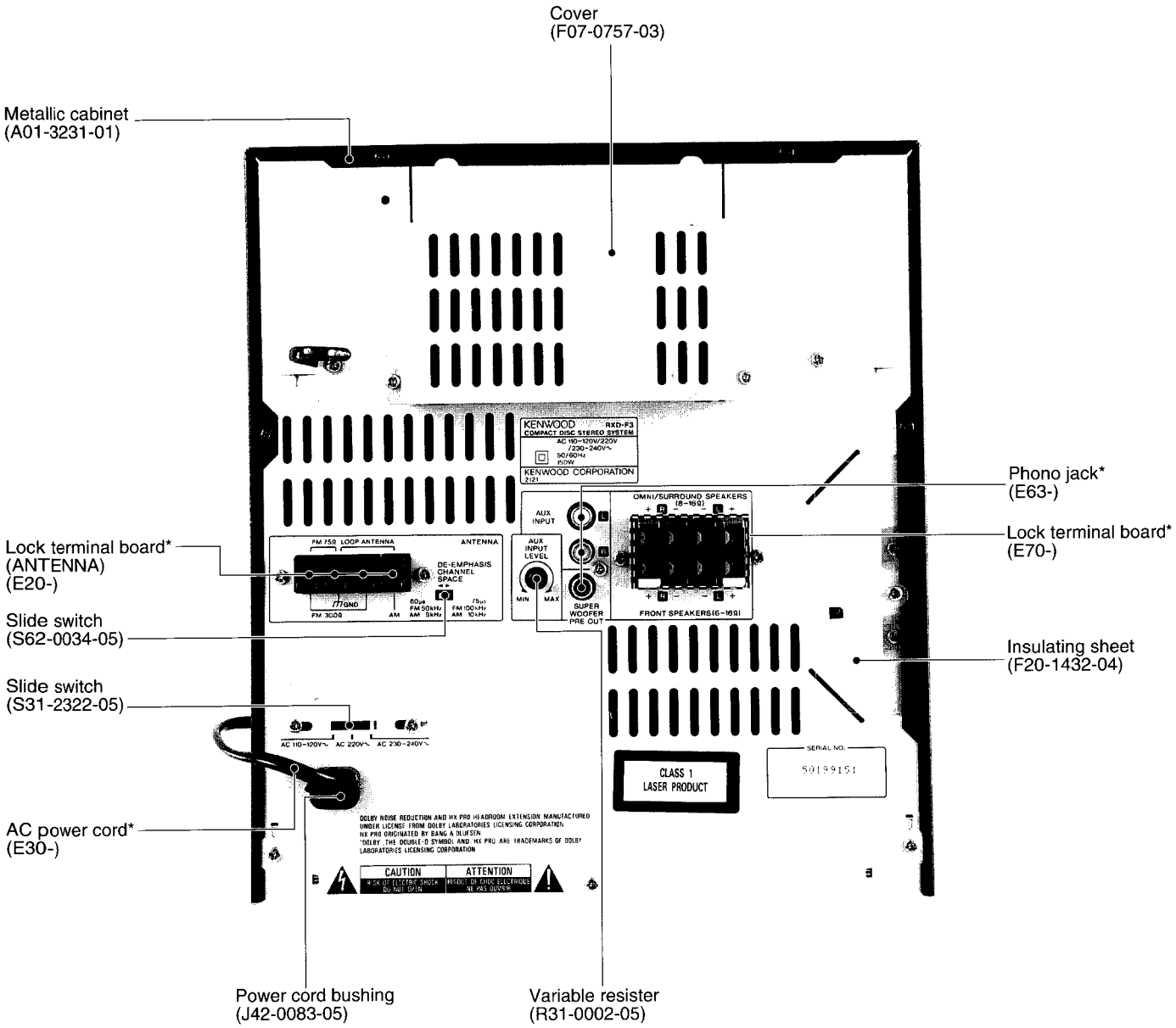

Photo is RXD-F3 M type(It's like RXD-F41)

***Refer to parts list on page 79.**

Caution

Beware of condensation

When water vapor comes into contact with the surface of cold material, water drops are produced. If condensation occurs, correct operation may not be possible, or the unit may not function correctly. This is not a malfunction, however, and the unit should be dried. (To do this, turn the POWER switch ON and leave the unit for several hours.)

Be especially careful in the following conditions:

- When the unit is brought from a cold place to a warm place, and there is a large temperature difference.
- When a heater starts operating.
- When the unit is brought from an air-conditioned place to a place of high temperature with high humidity.
- When there is a large difference between the internal temperature of the unit and the ambient temperature, or in conditions where condensation occurs easily.

Note related to transportation and movement (CD player)

Before transporting or moving this unit, carry out the following operations.

1. Turn the power ON but do not load a disc.

●Press the **CD(▶/II)** key to check that no disc is present on the tray.

2. Wait a few seconds and verify that the display shown appears.

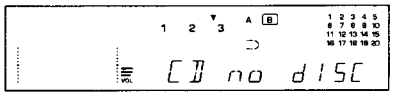

3. Turn the power OFF.

RXD-F3/F4/F41/F42

EXTERNAL VIEW / INSTRUCTION MANUAL

Photo is RXD-F4L (It's like RXD-F42)

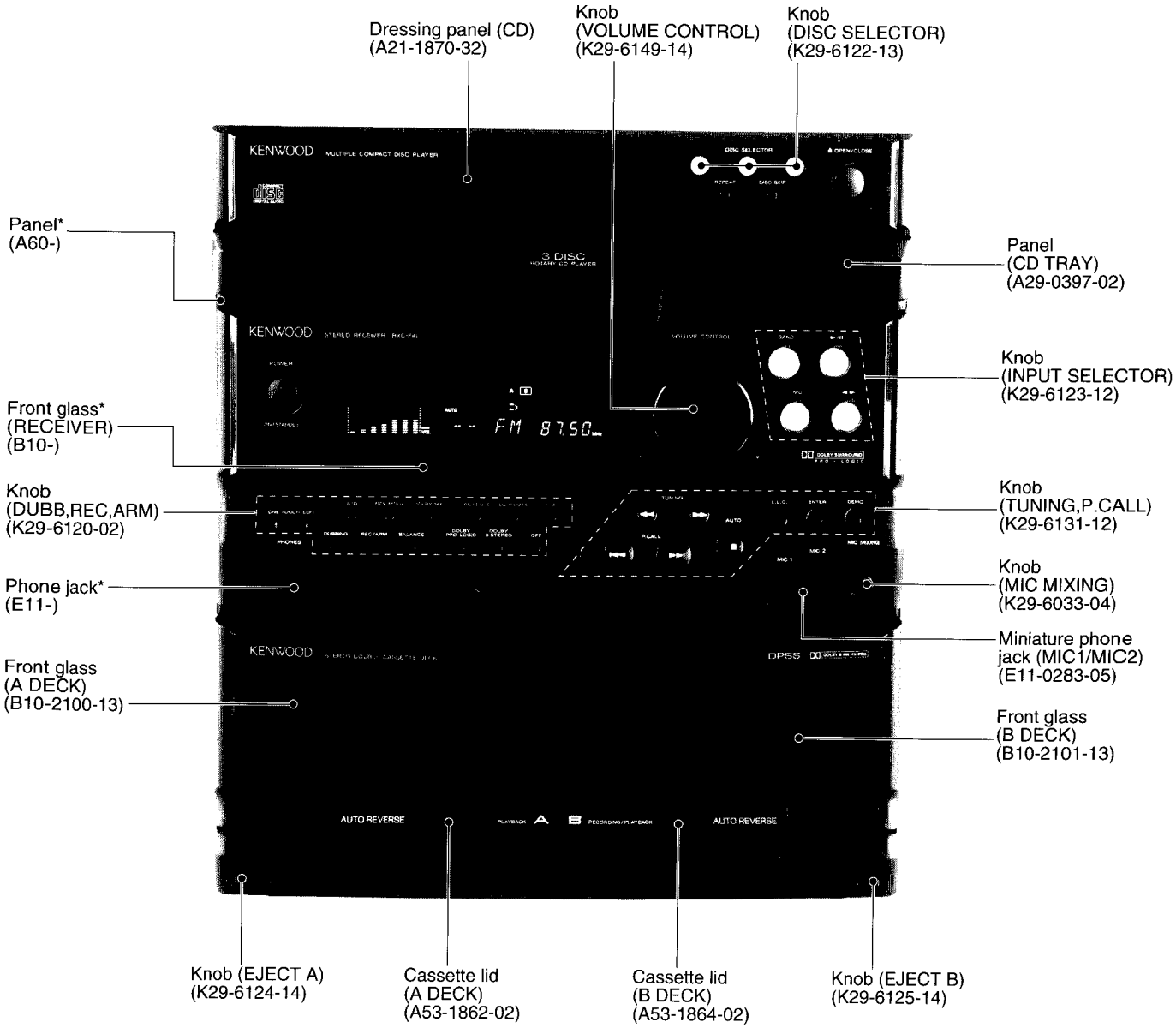

Instruction Manual

Language	System	Parts No.	Destination
ENGLISH	UD-303	B60-2170-00	T
	UD-303	B60-2171-00	KRP
	UD-433	B60-2255-00	MXI
	UD-403	B60-2145-00	KT
	UD-533	B60-2251-00	YMX
	UD-403	B60-2334-00	KRP
	UD-413	B60-2179-00	KRP
	UD-523	B60-2144-00	MI
FRENCH	UD-303	B60-2172-00	PE
	UD-403	B60-2146-00	E
	UD-403	B60-2335-00	P
	UD-413	B60-2180-00	P
GERMANY	UD-303	B60-2173-00	EG
	UD-403	B60-2147-00	EG

Language	System	Parts No.	Destination
DUTCH	UD-303	B60-2174-00	E
	UD-403	B60-2148-00	E
ITALYAN	UD-303	B60-2175-00	E
	UD-403	B60-2149-00	E
SPANISH	UD-303	B60-2176-00	RE
	UD-433	B60-2256-00	M
	UD-403	B60-2151-00	E
	UD-533	B60-2252-00	M
	UD-403	B60-2336-00	R
	UD-413	B60-2181-00	R
CHINESES	UD-433	B60-2177-10	MI
	UD-523	B60-2152-10	MI
TIWANESE	UD-433	B60-2178-10	M
	UD-523	B60-2153-10	M

EXTERNAL VIEW

Photo is RXD-F4L (It's like RXD-F42 Except ANTENNA terminal)

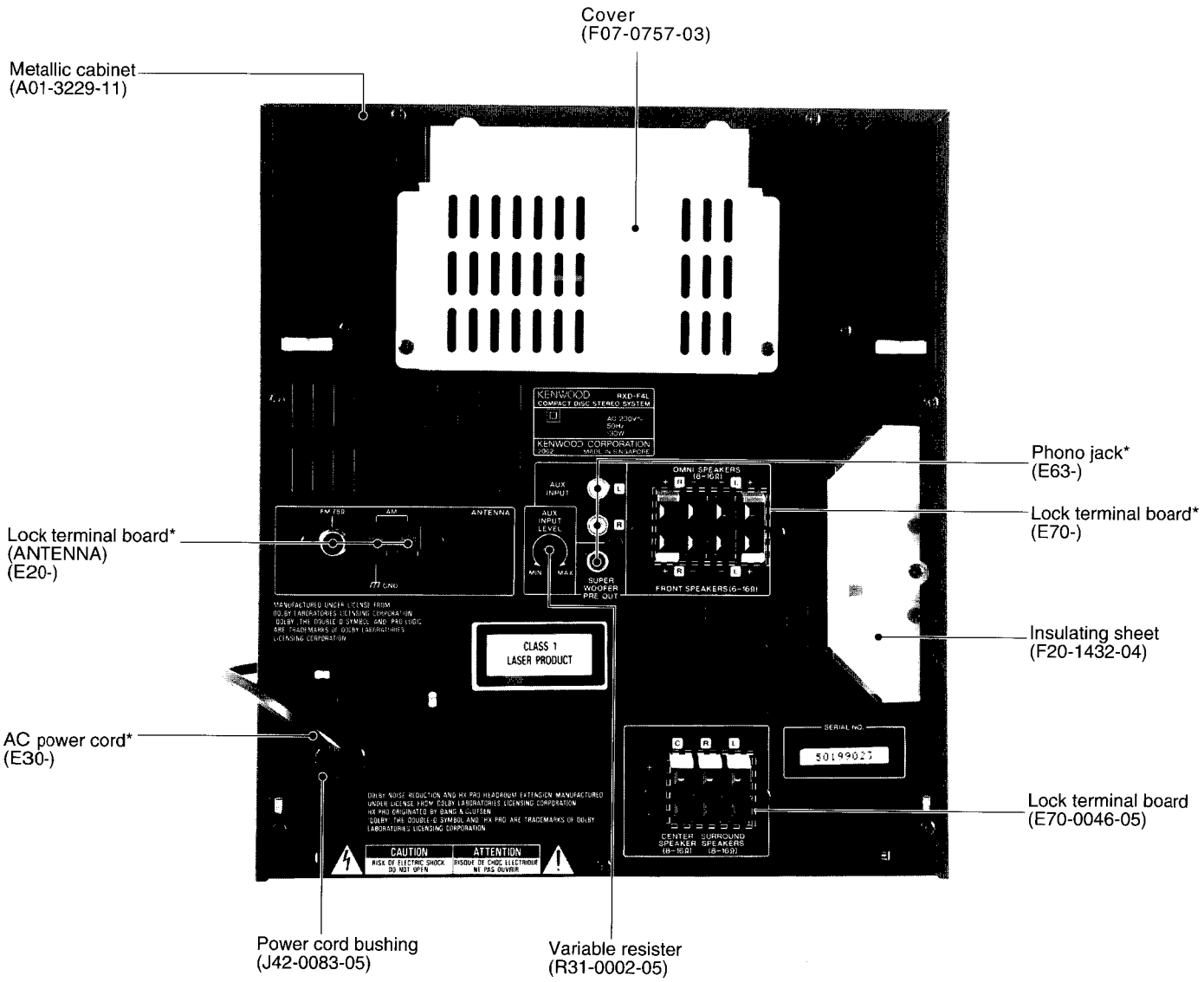

RXD-F3/F4/F41/F42

EXTERNAL VIEW / REMOTE CONTROL

Front panel difference point

[RXD-F41]

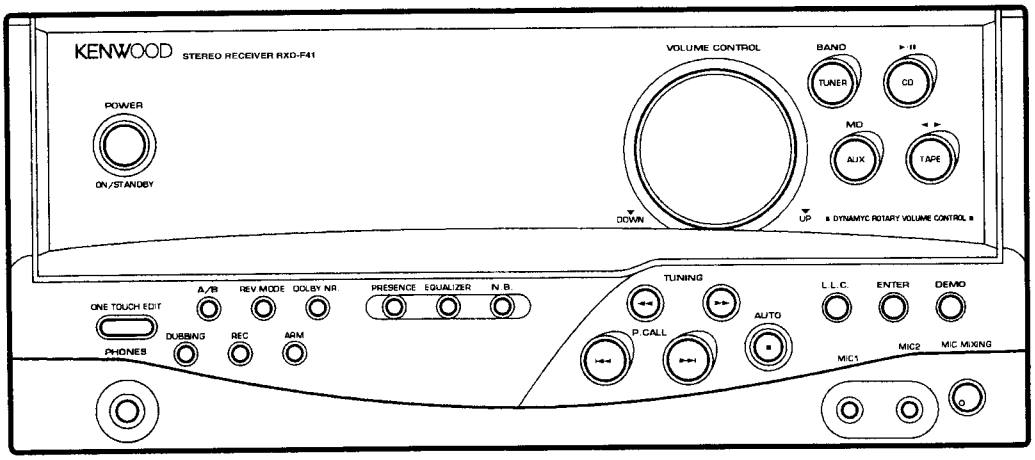

[RXD-F42]

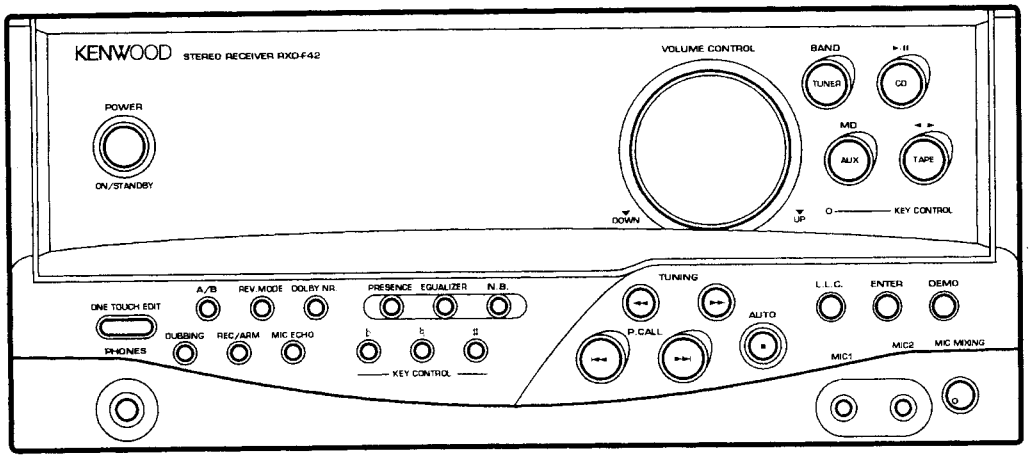

Remote control unit

[RXD-F3/F3L/F41/F42]

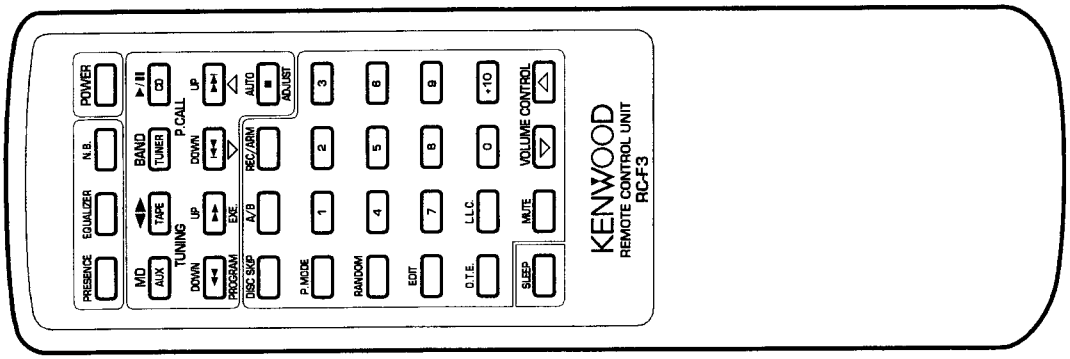

[RXD-F4]

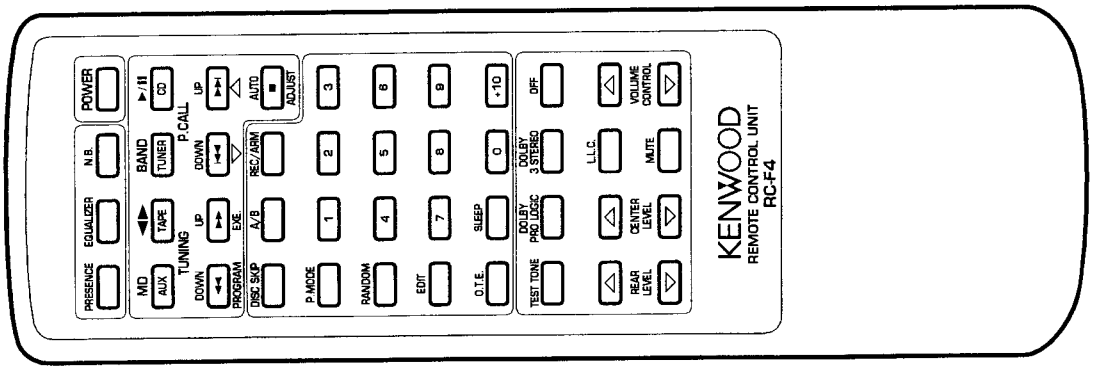

DISASSEMBLY FOR REPAIR

[Remove the CD player]

1. Push the OPEN/CLOSE key(❶), then open the CD tray.
2. Lift the left and right sides(❷) of the CD player front cover upward and remove it.
3. Push the OPEN/CLOSE key(❶) then close the CD tray.
4. Remove the 3 screws(❸) of the bottom.
5. Remove the 9 screws(❹ ~ ❻), then remove the CD mechanism(❼).

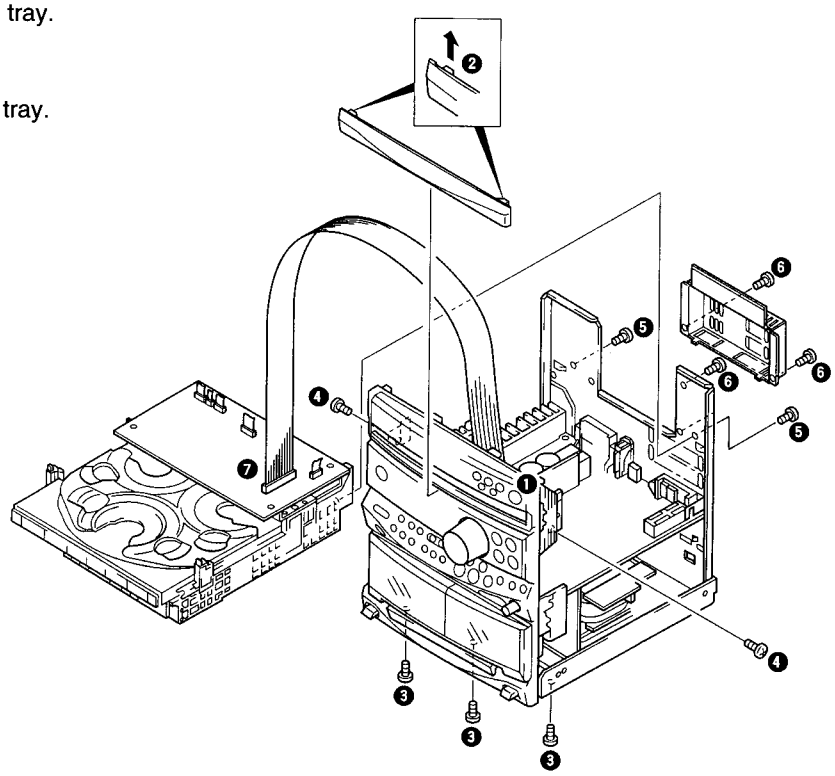

[Remove the chassis]

1. Remove the 15 screws(❽~⓫) and the connector (X09, CN7) (⓬) of RXD-F42
2. Cut the lead wire(⓭), then remove the chassis.

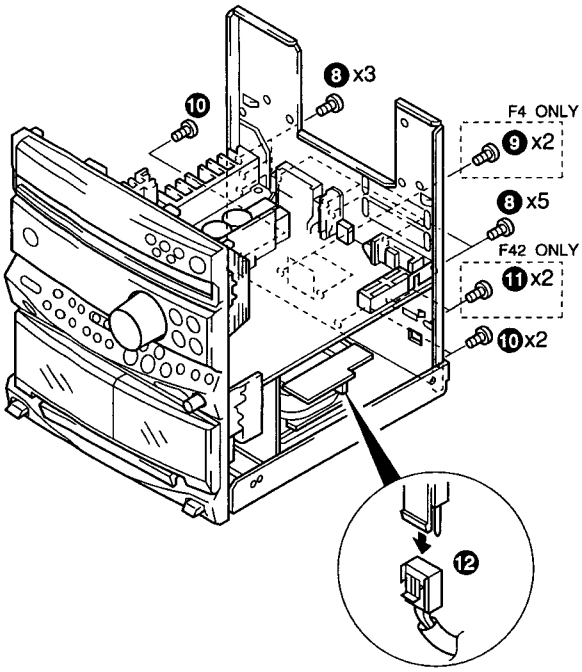

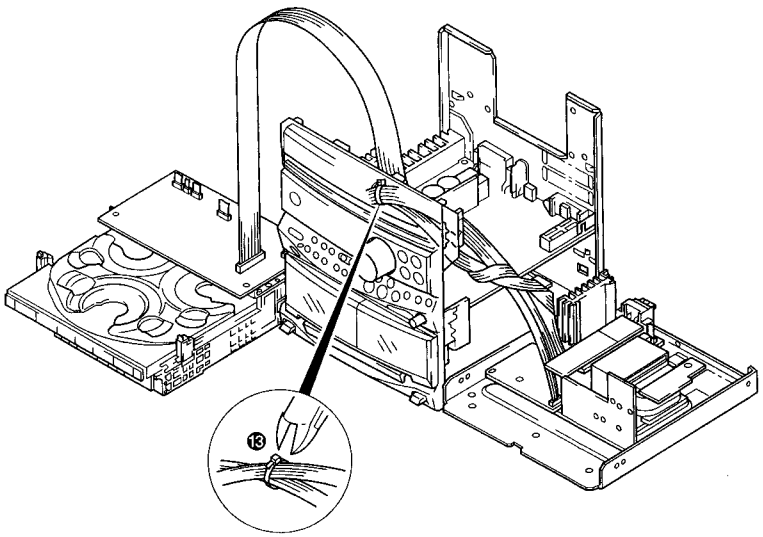

RXD-F3/F4/F41/F42

DISASSEMBLY FOR REPAIR

[CD mechanism section]

1) How to detach the tray

1. From the rear side of the CD mechanism, use a screw driver or the like to turn the friction arm (❶) fully counterclockwise.
2. Remove the two bracket attachment screws(❷).
3. Remove the tray in the arrow direction(❹).

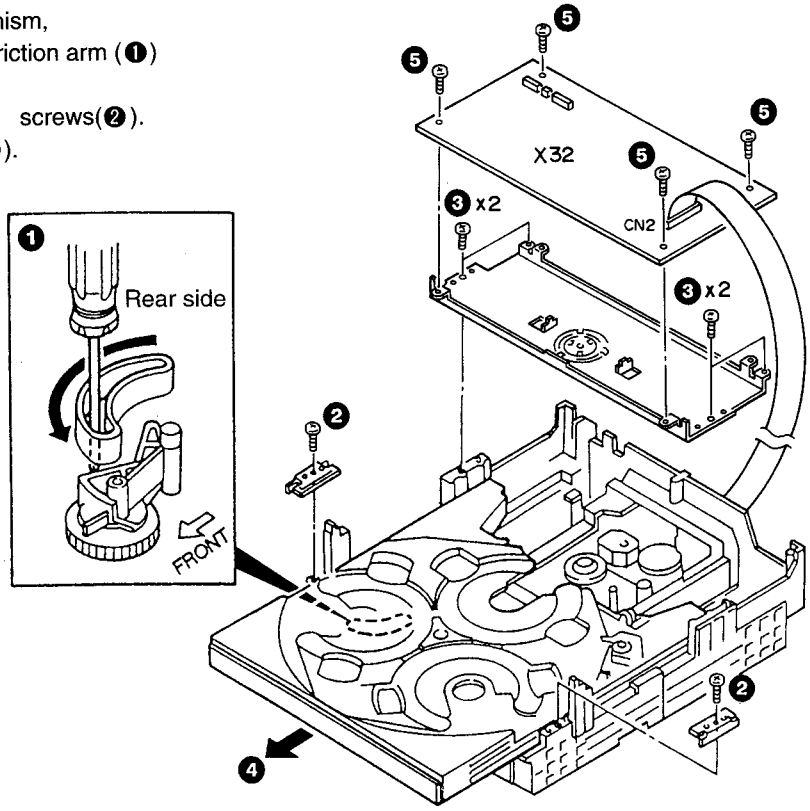

FIG. 1

2) How to attach the tray

1. Check to make sure the rollers on each side (two rollers) have not come off. Move the friction gear by hand in the direction of arrow(❶), align the groove on the rear side of the slide tray with the friction gear shaft and insert the slide tray.
2. Align the grooves on both sides of the slide tray with the main chassis' guides(❷) and insert the slide tray as far back as it will go.
3. Attach the brackets on both sides(two brackets).

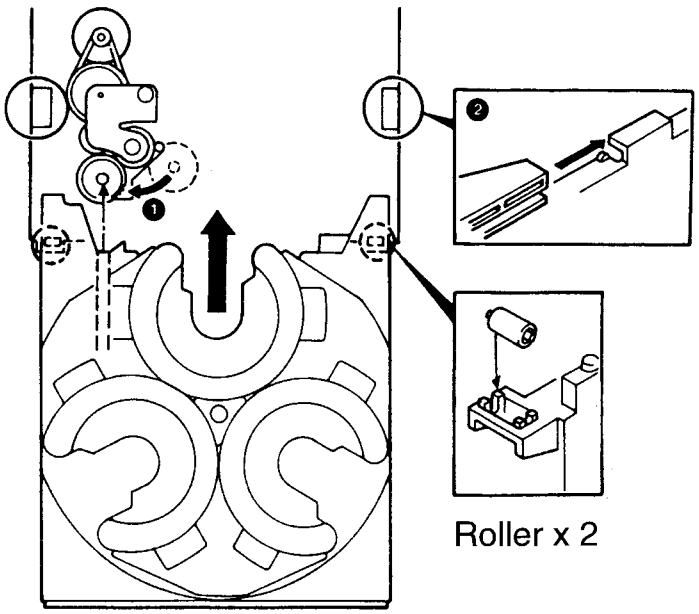

FIG. 2

DISASSEMBLY FOR REPAIR

3) Replacing the pickup
   1. Remove the two clamp bracket attachment screws.(Fig.1 ❸).
   2. Remove the four screws affixing the lift slider and lift out the lift slider and traverse unit.

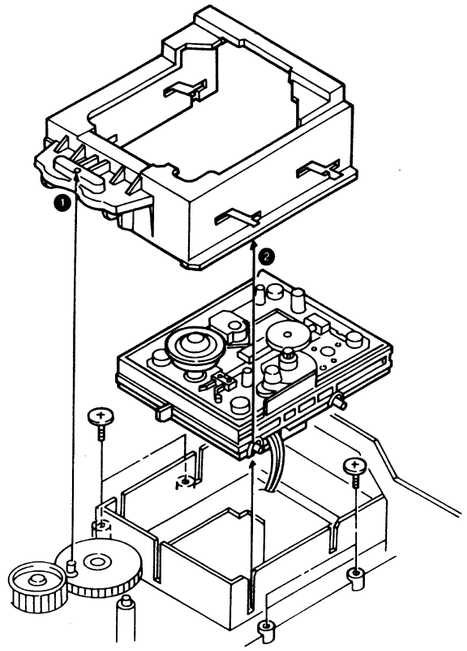

FIG. 3

3. Short the short land.
4. Remove the connector of the flat cable.
5. Remove the gear.
6. Remove the shaft.

※When reassembling, always be sure to align the cam gear and traverse shaft as shown in ❶ and ❷ of Fig ❸. Then remove a tool of the short land.

Note : Don't separate pickup PC board from pickup.

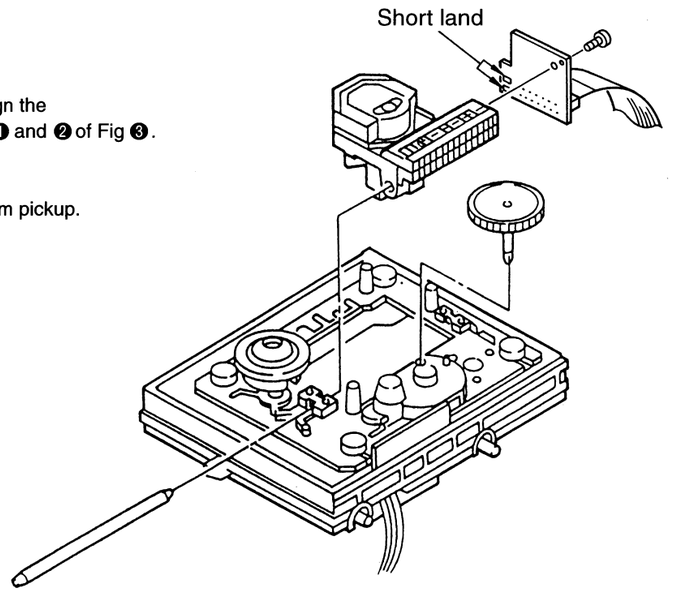

FIG. 4

PARTS DESCRIPTION

CAPACITORS

CC 45 TH 1H 220 J
1 2 3 4 5 6

1 = Type ... ceramic, electrolytic, etc.
2 = Shape ... round, square, ect.
3 = Temp. coefficient
4 = Voltage rating
5 = Value
6 = Tolerance

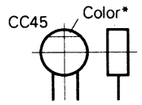

• Capacitor value

010 = 1pF
100 = 10pF
101 = 100pF
102 = 1000pF = 0.001µF
103 = 0.01µF

2 2 0 = 22pF
- Multiplier
- 2nd number
- 1st number

• Temperature coefficient

1st Word	C	L	P	R	S	T	U
Color*	Black	Red	Orange	Yellow	Green	Blue	Violet
ppm/°C	0	–80	–150	–220	–330	–470	–750

2nd Word	G	H	J	K	L
ppm/°C	±30	±60	±120	±250	±500

Example : CC45TH = –470 ± 60ppm/°C

• Tolerance (More than 10pF)

Code	C	D	G	J	K	M	X	Z	P	No code
(%)	±0.25	±0.5	±2	±5	±10	±20	+40 –20	+80 -20	+100 –0	More than 10µF – 10 ~ +50 Less than 4.7µF –10 ~ +75

(Less than 10pF)

Code	B	C	D	F	G
(pF)	±0.1	±0.25	±0.5	±1	±2

• Voltage rating

1st word \ 2nd word	A	B	C	D	E	F	G	H	J	K	V
0	1.0	1.25	1.6	2.0	2.5	3.15	4.0	5.0	6.3	8.0	–
1	10	12.5	16	20	25	31.5	40	50	63	80	35
2	100	125	160	200	250	315	400	500	630	800	–
3	1000	1250	1600	2000	2500	3150	4000	5000	6300	8000	–

• Chip capacitors

(EX) C C 7 3 F S L 1 H 0 0 0 J
1 2 3 4 5 6 7
(Chip) (CH, RH, UJ, SL)

(EX) C K 7 3 F F 1 H 0 0 0 Z
1 2 3 4 5 6 7
(Chip) (B, F)

Refer to the table above.
1 = Type
2 = Shape
3 = Dimension
4 = Temp. coefficient
5 = Voltage rating
6 = Value
7 = Tolerance

Dimension (Chip capacitors)

Dimension code	L	W	T
Empty	5.6 ± 0.5	5.0 ± 0.5	Less than 2.0
A	4.5 ± 0.5	3.2 ± 0.4	Less than 2.0
B	4.5 ± 0.5	2.0 ± 0.3	Less than 2.0
C	4.5 ± 0.5	1.25 ± 0.2	Less than 1.25
D	3.2 ± 0.4	2.5 ± 0.3	Less than 1.5
E	3.2 ± 0.2	1.6 ± 0.2	Less than 1.25
F	2.0 ± 0.3	1.25 ± 0.2	Less than 1.25
G	1.6 ± 0.2	0.8 ± 0.2	Less than 1.0

RESISTORS

• Chip resistor (Carbon)

(EX) R K 7 3 E B 2 B 0 0 0 J
1 2 3 4 5 6 7
(Chip) (B,F)

• Carbon resistor (Normal type)

(EX) R D 1 4 B B 2 C 0 0 0 J
1 2 3 4 5 6 7

1 = Type
2 = Shape
3 = Dimension
4 = Temp. coefficient
5 = Rating wattage
6 = Value
7 = Tolerance

Dimension

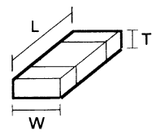

Dimension (Chip resistor)

Dimension code	L	W	T
E	3.2 ± 0.2	1.6 ± 0.2	1.0
F	2.0 ± 0.3	1.25 ± 0.2	1.0
G	1.6±0.2	0.8±0.2	0.5±0.1

Rating wattage

Code	Wattage	Code	Wattage	Code	Wattage
1J	1/16W	2C	1/6W	3A	1W
2A	1/10W	2E	1/4W	3D	2W
2B	1/8W	2H	1/2W		

 RXD-F3/F4/F41/F42

BLOCK DIAGRAM

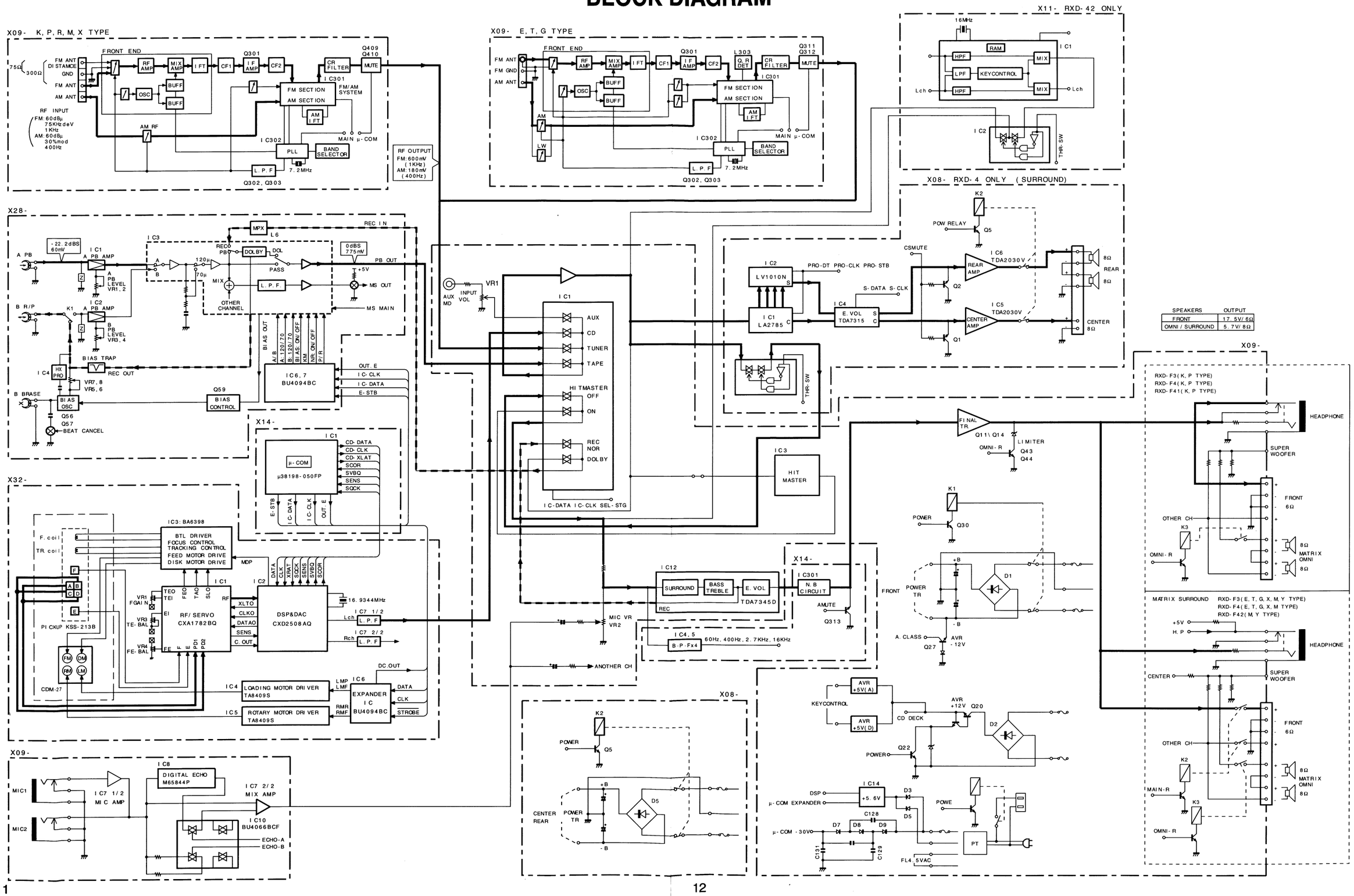

CIRCUIT DESCRIPTION

1. MAIN μ-COM (M38198MC-053FP) (X14 : IC 1) : CD,Display

1.1 Function

		RXD-F2			RXD-F3			RXD-F4	RXD-F41	RXD-F42
		K,P,R	X,T,E,G	M,Y	K,P,R	X,T,E,G	M	M,X,Y,T,E,G	K,P,R	M
	CD Player	3 DISC								
Tuner	FM Stereo	○								
	LW		T only			T only		T only		
AMP	POWER	30W			50W					
	MATRIX Circuit/ Surround terminal			○		○				○
	A.S.P	○								
	MIC x 2, MIXING	○								
	Digital echo						○			○
	Digital key control									○
	DOLBY PROLOGIC							○		
	AC outlet								○	
DECK	W-DECK MECHA	FULL LOGIC ONE WAY			FULL LOGIC REVERSE					
	DOLBY NR	B			B,HX-PRO					
	Normal speed	○								
	B DECK recording	○								

1.2 Microproccesor periphery block diagram

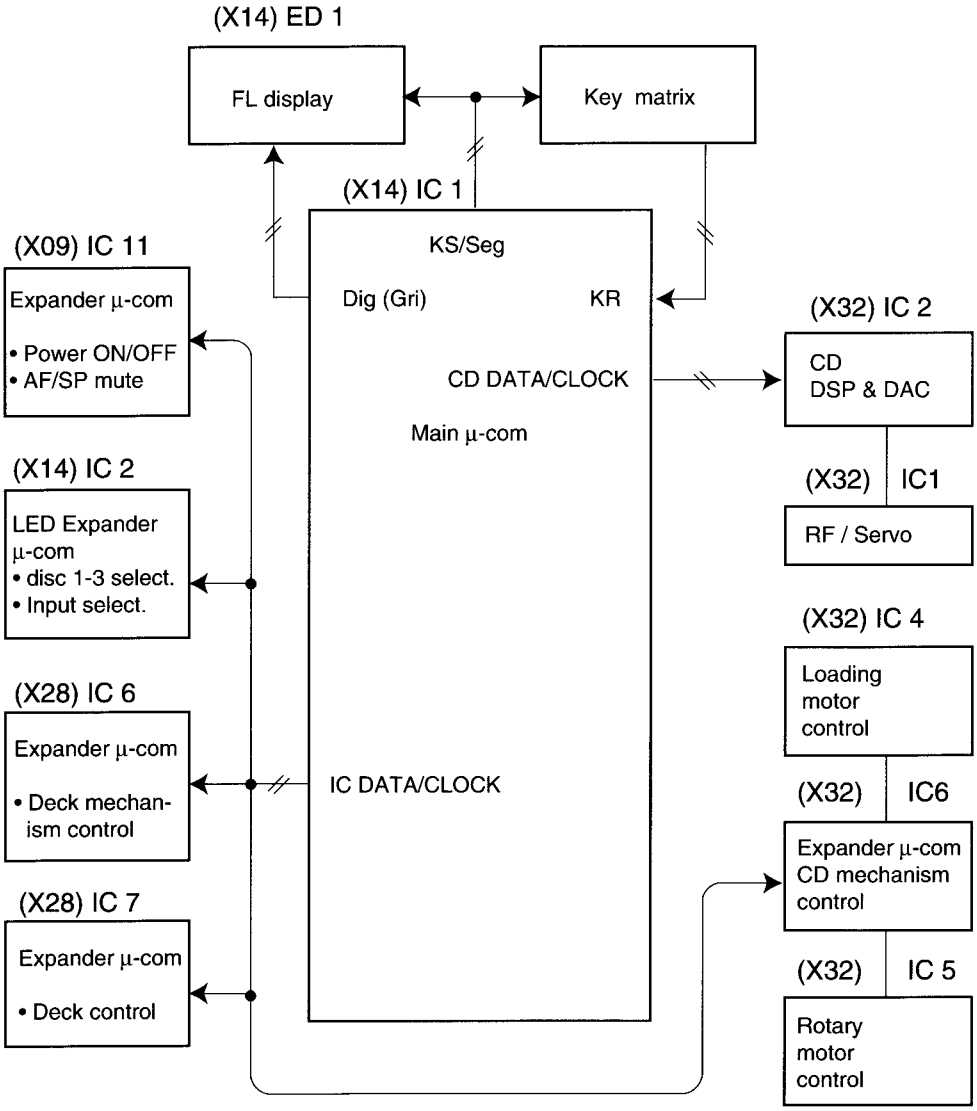

CIRCUIT DESCRIPTION

1.3 Pin connection

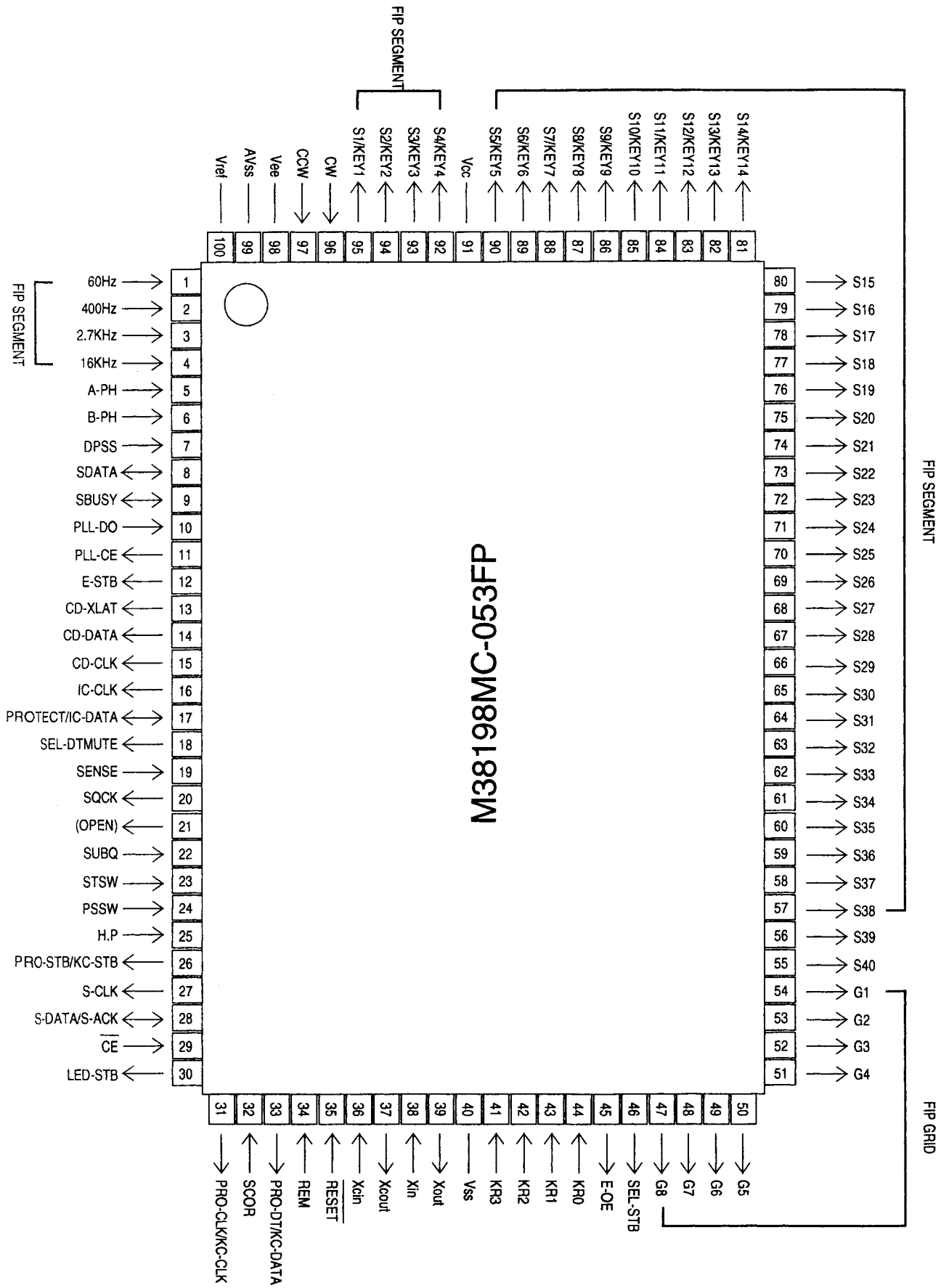

CIRCUIT DESCRIPTION

1.4 Pin description

PIN NO.	I/O	NAME	DESCRIPTION	REMARKS
1	I	60Hz	Speana input(A/D convertor input)	
2	I	400Hz		
3	I	2. 7kHz		
4	I	I6kHz		
5	I	A-PH	A photo sensor input	
6	I	B-PH	B photo sensor input	
7	I	DPSS	DPSS detection	
8	I/O	SDATA	Serial communication data	Refer Note 1
9	I/O	SBUSY	Serial communication busy	Refer Note 1
10	I	PLL-DO	PLL(LC7218)data input	
11	O	PLL-CE	PLL(LC7218)chip enable	
12	O	E-STB	Expander IC(BU4094BF) strobe	
13	O	CD-XLAT	CD latch output(CXA1782BQ,CXD2508Q)	
14	O	CD-DATA	CD IC DATA(CXA1782BQ · CXD2508Q)	
15	O	CD-CLK	CD IC CLK(CXA1782BQ · CXD2508Q)	
16	O	I C-CLK	IC-CLOCK(BU4094BF · NJU7313AM,NJU3718G · LC7218,LC83025E)	
17	I/O	PROTECT/IC-DATA	Protection input IC data(BU4094BF · NJU7313AM,NJU3718G,LC7218,LC83025E)	
18	O	SEL-DTMUTE	Selector IC data mute(NJU7313AM)	
19	I	SENSE	CD sense input(CXA1782BQ,CXD2508Q)	
20	O	SQCK	Sub cord clock(CXD2508Q)	
21	O	(OPEN)	Unused	
22	I	SUBQ	Sub code data(CX2508Q)	
23	I	STSW	CD mechanism stop SW	
24	I	PSSW	CD mechanism position SW	
25	I	H. P	Headphone input	Refer note 8
26	O	PRO-STB/KC-STB	Dolby PROLOGIC IC(LA2785,LV1010N)strobe/Karaoke (Key control) IC(M65840SP) strobe	Refer Note 2
27	O	S-CLK	Surround IC clock(TDA7315,TDA7345)	
28	I/O	S-DATA/S-ACK	Surround IC data(TDA7315 · TDA7345)	
29	I	$\overline{\text{CE}}$	Power failure input	
30	O	LED-STB	LED IC(NJU3718G) strobe	
31	O	PRO-CLK/KC-CLK	Dolby PROLOGIC IC(LA2785,LV1010N)clock/Karaoke (Key control) IC(M65840SP)clock output	Refer Note 2
32	I	SCOR	Sub code(CXD2508Q)	
33	O	PRO-DT/KC-DATA	Dolby PROLOGIC IC(LA2785,LV1010N) data/Karaoke (Key control) IC(M65840SP) data output	Refer Note 2
34	I	REM	Remote control input	
35		$\overline{\text{RESET}}$	Reset	

CIRCUIT DESCRIPTION

PIN NO.	I/O	NAME	DESCRIPTION	REMARKS
36	I	Xcin	Timer clock input(32.768KHz)	
37	O	Xcout		
38	I	Xin	Main clock input(8.38MHz)	
39	O	Xout		
40		Vss	(GND)	
41 ~ 44	I	KR3 ~ KR0	Key return 3 ~ 0	
45	O	E-OE	Expander IC(BU4094BF) enable control	
46	O	SEL-STB	Selector IC(NJU7313AM) strobe	
47 ~ 54	O	G8 ~ G1	FL grid output G8 ~ G1	
55 ~ 80	O	S40 ~ S15	FL segment output S40 ~ S15	
81~90	O	SI4/KS14 ~ S5/KS5	FL segment/Key scan output S14/KS14~S5/KS5	
91		Vcc	(Micom power)	
92~95	O	S4/KS4~S1/KS1	FL segment/Key scan output S4/KS4~S1/KS1	
96	I	CW	Rotary encoder input B	
97	I	CW	Rotary encoder input A	
98		Vee	Full down power	
99		AVss	A/D GND	
100		Vref	A/D reference voltage	

1.5 Key scan line input

NAME	DESCRIPTION	REMARKS
SLT	CD limit SW	
DNSW	CD down SW	
UPSW	CD up SW	
LDSW	CD load SW	
$\overline{\text{UNLOAD}}$	CD unload SW	
A-PACK	A deck tape detection	
B-PACK	B deck tape detection	
A-CrO2	A deck Normal/CrO2 detection	
B-CrO2	B deck Normal/CrO2 detection	
A-PLAY	A deck PLAY — SW	
B-PLAY	B deck PLAY — SW	
FREC	Forward REC detection	
RREC	Reverse REC detection	Refer Note 7
TEST	PCB TEST mode	
DSW3	Decided model(D)	
DSW4		
DSW5	Decided destination(D)	
DSW6		
DSW0	Decided tuner destination(D)	
DSW1		
DSW2		
$\overline{\text{ST}}$	PLL stereo input	
$\overline{\text{SD}}$	Station detector input	

CIRCUIT DESCRIPTION

Note 1: This port controls only the J-type of UD303/UD423. As for the same model for other destinations, it is set to the input mode, and the register to be accessed is kept at Low.

Note 2: This port controls only the M/J-type of UD423 (key-control type) and all destination models of UD403 (DOLBY PRO LOGIC type). As for the model for other destinations, it is set to the input mode, and the register to be accessed is kept at Low.

Note 3: This terminal controls only all destination models of UD403 (DOLBY PRO LOGIC type). As for other models, it is set at Low.

Note 4: This terminal controls the M/J type of UD203, the E/M type of UD303/UD403, the M/J type of UD423, and the K type of UD403. As for other models, it is set at Low.

Note 5: This terminal controls the M/J type of UD303/UD423. As for other models, it is set at Low.

Note 6: This terminal controls all destination models of UD403 as a MAIN RELAY as well as the M/J type of UD423 as a KEY CONTROL LED. As for other models, it is set at Low.

Note 7: This terminal is fixed at Low for the ONE-WAY type deck (i. e. all destination models of UD203).

Note 8: This port is fixed at Low except on UD403.

Note 9: This port is unused when the mechanical deck has one motor.

	UD203				UD303				UD403			UD413				UD423	
	K	E	M	J	K	E	M	J	K	E	M	K	E	M	J	M	J
Note 1								O									O
Note 2									O	O	O					O	O
Note 3									O	O	O						
Note 4			O	O		O	O	O	O	O	O					O	O
Note 5							O	O	O		O					O	O
Note 6									O	O	O					O	O
Note 7	O	O	O	O					O								
Note 8									O	O	O						

Additional Explanation on Note 4:

OMNI RELAY (MATRIX SURROUND) Control

The models that this terminal controls as an OMNI RELAY are UD203 (M/J), UD303 (E/M/J), UD403 (E/M), and UD423 (M/J), of which control is activated (i. e. turned ON) in the ARENA / JAZZ CLUB / STADIUM mode of PRESENCE.

As far as UD403 (K) is concerned, the terminal is controlled (i. e. turned ON) only when it is set at DOLBY PRO LOGIC. 3 STEREO.

Please note that there is no need to control it when the same model for other destinations are set at DOLBY PRO LOGIC: 3 STEREO.

DIODE SWITCH TABLE

(1)DECIDED MODEL(DSW3,DSW4)

	DSW4 D19	DSW3 D18
UD203	L	L
UD303	L	H
UD403	H	L
UD413/UD423	H	H

L : Non diode

H : Exist diode

(2)DECIDED DESTINATION(DSW5,DSW6)

	DSW6 D16	DSW5 D17
K. P. R	L	L
E. T, G. X	L	H
M, Y	H	L

L : Non diode

H : Exist diode

CIRCUIT DESCRIPTION

1.6 Initialization (Reset)

Insert the AC plug into the outlet while holding down the ENTER key of main unit.

Initial stage

	State	
SYSTEM	POWER	OFF
CLOCK PROG.	CLOCK	STOP(AM12:00)
	PROG. Operation MODE	OFF
	PROG.1 : ON=AM12:00	OFF=AM12:00
	MOD=PLAY	SOC=TUNER(1ch)
	PROG.2 : ON=AM12:00	OFF=AM12:00
	MOD=PLAY	SOC=TUNER(1ch)
AMP	VOLUME	7SEG=7
	SELECTOR	TUNER
	EQ.	OFF
	PRESENCE	OFF
	LLC	OFF
	ACTIVE N.B.	OFF
	MUTING	OFF

	State	
TUNER	BAND	FM
	Each last BAND	
	FM : P.ch= - - ch	FREQ=min(76.0 or 87.5MHz)
	AM(MW) : P.ch= - - ch	FREQ=min(530 or 531kHz)
	LW : P.ch= - - ch	FREQ=min(153kHz)
	P.CH Memory 1ch~20ch : Test frequency	(Refer to Test Frequency)
	Tuning MODE	AUTO (AUTO STEREO)
TAPE	A/B Selector	B
	A Deck Head position	For FWD
	B Deck Head position	For FWD
	DOLBY NR	OFF
	DIRECTION	⮌
CD	DISC Selector	DISC 1
	REPEAT	OFF

2 TEST MODE

2.1 Cassette Deck TEST Mode

TEST Mode	Operation	Description
Input method	While depressing the TAPE key, plug the power cord in to an AC power outlet.	Entered TEST mode.
Cancel method	Turn off the power.	Cancelled TEST mode.
4 sec. REC	REC	Insert the cassette tape of B deck, select AUX, the deck start REC position. On the REC mute off, started 4 sec REC. After return REC Starting position,select TAPE, started PLAY position.
Direct PLAY	FWD key ※RVS key(Insert the tape in the A or B deck)	FWD key : Moved FWD PLAY to select A or B RVS key : Moved REV PLAY to select A or B.
W PLAY	FWD key ※RVS key(Insert the tape in the A or B deck)	Moved PLAY A and B, output PLAY signal with selection.
FL display	DEMO	FL : All no light ←→ normal display(cyclic) LED RED and GRN : Flickering ←→ normal display(Cyclic)

※RVS position isn't RXD-F2.

2.2 DETECT HALF SW (On TEST MODE)

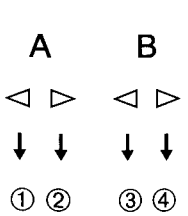

① A deck sw detection display

Lit(ON) : A deck NORMAL tape

Lit(OFF) : A deck METAL, CrO2 tape

② B deck sw detection display

Lit(ON) : B deck NORMAL tape

Lit(OFF) : B deck METAL, CrO2 tape

③ B deck sw detection display

Lit(ON) : B deck RVS direction REC possible tape

Lit(OFF) : B deck RVS direction REC impossible tape

④ B deck sw detection display

Lit(ON) : B deck FWD direction REC possible tape

Lit(OFF) : B deck FWD direction REC impossible tape

CIRCUIT DESCRIPTION

2.2 AMP GE TUNER TEST MODE

1. How to turn it ON
   If you turn ON the power while pressing the AUX key or the TUWER key, it will go into the AMP/GE/TUNER test mode.
2. Operation immediately after the start-up of the test mode
   The test mode gets started while the power is turned ON. If the AUX key is pressed, the selector will be turned to "AUX." If the TUNER key is pressed, it will be turned to "TUNSR. All the FLs will light up. The red and green lamps of the two-color LEDS will light up by turns at 500 msec. interval. All the single-color LEDS will light up. The indication with all the LEDs' lighting up can be released by operating the key on the remote control or on the main body Then, it will be returned to the ordinary "AUX" display then to the ordinary display.
3. Operation in the test mode

(1) MUTE control is not activated when the mode is switched.
(2) The test mode will not be terminated if it is shifted to other positions than "AUX.
(3) The test mode will be terminated by plugging it off the power source or by initializing it, when all the settings will be initialized.
(4) During the test mode, it can be operated in a special manner that is different from an ordinary operation by using the keys on the remote control or the main body, specifically as shown in the following table.

Key	Function	Key	Function
POWER	Initialization	DEMO	All light ⇔ normal display(cyclic)
CD	Normal operation	+10(Remocon key)	Selector TUNER+10 key
TAPE	Normal operation	0(Remocon key)	Selector TUNER 0 key
TUNER	Normal operation	1(Remocon key)	Selector TUNER 1 key
MD/AUX	Normal operation	2(Remocon key)	Selector TUNER 2 key
■	Normal operation	3(Remocon key)	Selector TUNER 3 key
⏮	Normal operation	4(Remocon key)	Selector TUNER 4 key
⏭	Normal operation	5(Remocon key)	Selector TUNER 5 key
◀◀	Normal operation	6(Remocon key)	Selector TUNER 6 key
▶▶	Normal operation	7(Remocon key)	Selector TUNER 7 key
ENTER.	Normal operation	8(Remocon key)	Selector TUNER 8 key
LLC	Normal operation	9(Remocon key)	Selector TUNER 9 key
PRESENCE	Normal operation		
N. B.	Normal operation		
EQ. ON/OFF	Normal operation		
DEMO	Normal operation		
DISC 1	Normal operation		
DISC 2	Normal operation		
DISC 3	Normal operation		
OPEN/CLOSE	Normal operation		
※DISK SKIP	※Equalizer FLAT (OFF)		
REPEAT	Normal operation		
A/B(A)	※Master MID(CE)		
DIRECTION/B(F2 only)	※Master MIN(L)		
DOLBY NR B(Unit)	Equalizer MIN		
DUBBING (Unit)	Equalizer MAX		
REC/ARM(REC)	HIT MASTER ON		
ONE TOUCH EDIT	※Master MAX(R)		

※ The DISK SKIP key is used for "Equalizer FLAT" and "OFF function" (to turn OFF "PRESENCE" and "HIT MASTSR").
※ The remote control/main body keys that are not listed above will work as usual.
※ If you press the center key of the models equipped with DOLBY SURROUND function, the DIRECTION key has the "L-side balance MAX" function, the A/B(A) key has the "balance center" function, and the ONS TOUCH EDIT key has the "R-side balance MAX" function.

CIRCUIT DESCRIPTION

3. Expander μ-com : BU4094BCF (X09 : IC11) (X28 : IC 6,7) , BU4094BC (X32 : IC6)

3.1 Pin connection

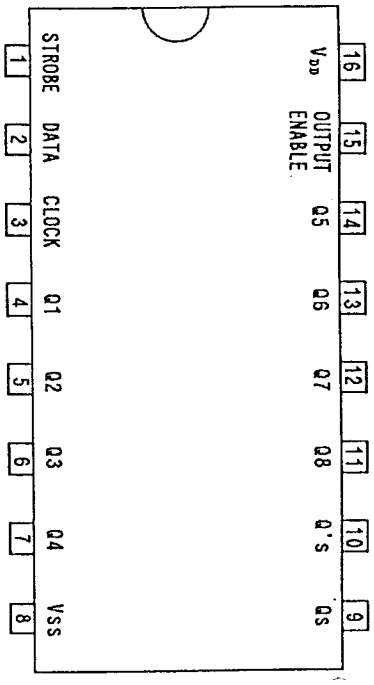

3.2 Pin connection

Pin No.	Pin Name	I/O	Pin Function
1	STROBE	I	STROBE INPUT
2	DATA	I	DATA INPUT
3	CLOCK	I	CLOCK INPUT
4	Q1	O	PARALLEL OUTPUT
5	Q2	O	PARALLEL OUTPUT
6	Q3	O	PARALLEL OUTPUT
7	Q4	O	PARALLEL OUTPUT
8	Vss	—	Vss
9	Qs	O	SERIAL OUTPUT
10	Q's	O	SERIAL OUTPUT
11	Q8	O	PARALLEL OUTPUT
12	Q7	O	PARALLEL OUTPUT
13	Q6	O	PARALLEL OUTPUT
14	Q5	O	PARALLEL OUTPUT
15	OUTPUT ENABLE	I	ENABLE INPUT
16	V DD	—	V DD

※Refer to next diagram about Q1 ～Q8.

3.3 TRUE TABLE

CLOCK	OUTPUT ENABLE	STROBE	DATA	PARALLEL OUTPUTS		SERIAL OUTPUTS	
				Q1	Qn	Qs	Q's
↑	L	X	X	Z	Z	Q7	No Chg.
↓	L	X	X	Z	Z	No Chg.	Qs
↑	H	L	X	No Chg.	No chg.	Q7	No Chg.
↑	H	H	L	L	Qn- 1	Q7	No Chg.
↑	H	H	H	H	Qn-1	Q7	No Chg.
↓	H	X	X	No Chg.	No Chg.	No Chg.	Qs

Z=High Impedance
X=Don' t Care

3.4 Timing chart

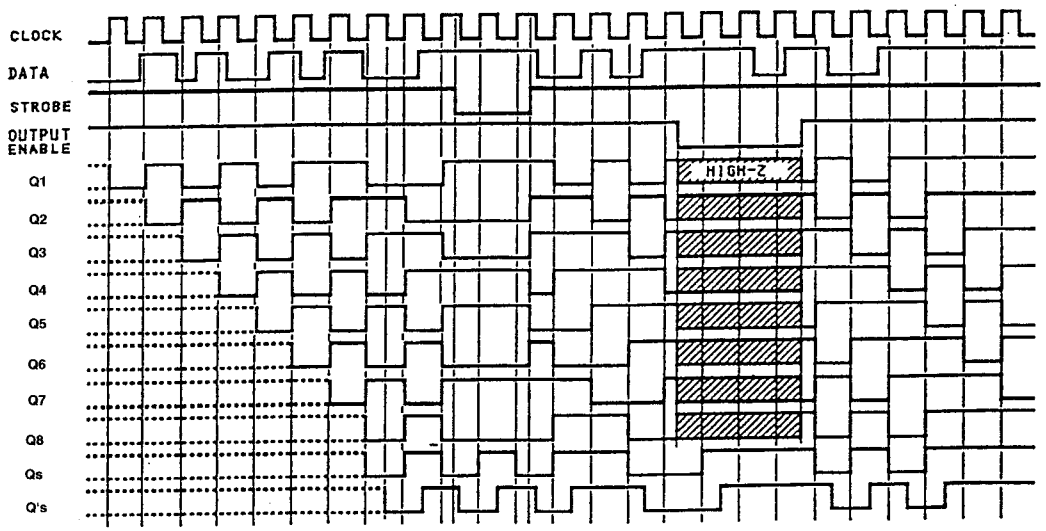

CIRCUIT DESCRIPTION

4. EXPANDER μ-COM : NJU3718G (X14 : IC2)

4.1 Pin connection

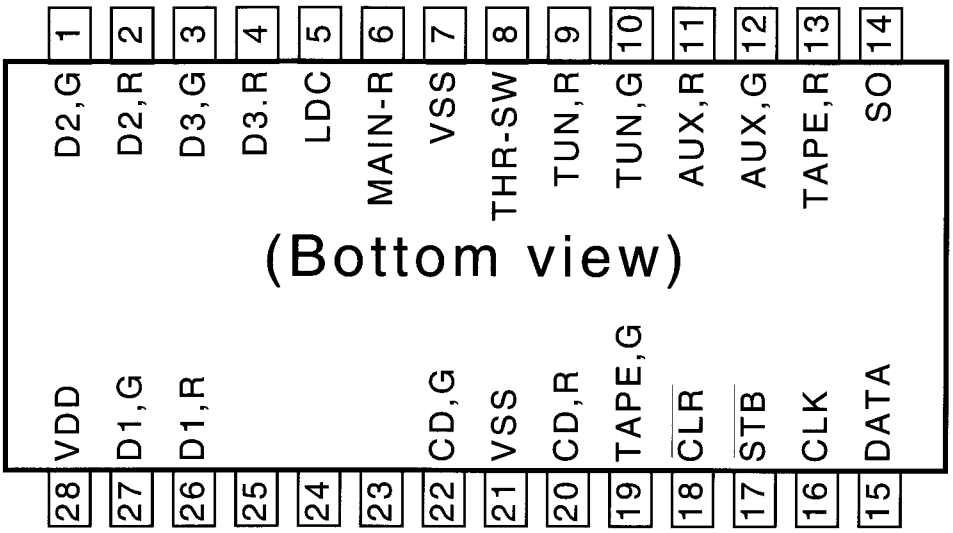

4.2 Pin description

Pin No.	Pin Name	I/O	Pin Function
1	D2. G	O	DISC2 GREEN
2	D2. R	O	DISC2 RED
3	D3. G	O	DISC3 GREEN
4	D3. R	O	DISC3 RED
5	LDC	O	CD LASER DIODE
6	MAIN-R	O	MAIN SPEAKER RELAY(Ref.Note 6)
7	Vss	—	V ss
8	THR-SW	O	Key control/Pro Logic through SW
9	TUN. R	O	Selector TUNER LED RED
10	TUN. G	O	Selector TUNER LED GREEN
11	AUX. R	O	Selector AUX LED RED
12	AUX. G	O	Selector AUX LED GREEN
13	TAPE. R	O	Selector TAPE LED RED
14	SO	I	NO USE
15	DATA	I	DATA INPUT
16	CLK	I	CLOCK INPUT
17	$\overline{STB}$	I	STROBE INPUT
18	$\overline{CLR}$	I	CLEAR INPUT
19	TAPE. G	O	Selector TAPE LED GREEN
20	CD. R	O	Selector CD LED RED
21	Vss	—	Vss
22	CD. G	O	Selector CD LED RED
23	◀◀ ▶▶	O	Center control key(◀◀ ▶▶)
24	⏮ ⏭	O	Center control key(⏮ ⏭)
25	■	O	Center control key(■)
26	D1. R	O	DISC1 RED
27	D1. G	O	DISC1 GREEN
28	V DD	—	V DD

● Note 6: This terminal controls all destination models of UD403 as a MAIN RELAY as well as the M/J type of UD423 as a KEY CONTROL LED. As for other models, it is set at Low.

CIRCUIT DESCRIPTION

Expander port output

1. Amp section (8 ports)

IC-NO.	Pin No.	Name	I/O	Function name	Description	Remarks
(X09)IC11	4	Q1	O	POWER	Power supply output	
	5	Q2	O	$\overline{\text{AMUTE}}$	Audio MUTE	
	6	Q3	O	$\overline{\text{CR-MUTE}}$	Center rear MUTE	Ref. Note 3
	7	Q4	O	CR-R	Relay ON/OFF of center rear speakers	Ref. Note 3
	14	Q5	O	OMNI-R	Relay ON/OFF of OMNI speakers	Ref. Note 4
	13	Q6	O			
	12	Q7	O			
	11	Q8	O	$\overline{\text{TMUTE}}$	Tuner MUTE	

- Note 3 : his terminal controls only all destination models of UD403 (DOLBY PRO LOGIC type). As for other models, it is set at Low.
- Note 4 : This terminal controls the M/J type of UD203, the E/M type of UD303/uD403, the M/J type of UD423, and the K type of UD403. As for other models, it is set at Low.
- Additional Explanation on Note 4 : OMNI RELAY (MATRIX SURROUND) Control
  The models that this terminal controls as an OMNI RELAY are UD203 (M/J), UD303 (E/M/J), UD403 (E/M), and UD423 (M/J), of which control is activated (i. e. turned ON) in the ARENA / JAZZ CLUB /STADIUM mode of PRESENCE.
  As far as UD403 (K) is concerned, the terminal is controlled(i. e. turned ON) only when it is set at DOLBY PRO LOGIC : 3 STEREO.
  Please note that there is no need to control it when the same model for other destinations are set at DOLBY PRO LOGIC : 3 STEREO.

2. Cassette deck section (1) (8 ports)

IC-NO.	Pin No.	Name	I/O	Function name	Description	Remarks
(X28)IC6	4	Q1	O	A-SOL	A solenoid control	
	5	Q2	O	A-CPM	A motor control	Ref. Note 9
	6	Q3	O	B-SOL	B solenoid control	
	7	Q4	O	B-CPM	B motor control	
	14	Q5	O	R/$\overline{\text{P}}$	B mechanism REC/PLAY change over	
	13	Q6	O	BEAT-C	Beat canceller	
	12	Q7	O	ECHO-B	Echo IC change over B	Ref. Note 5
	11	Q8	O	ECHO-A	Echo IC change over A	Ref. Note 5

- Note 5 : This terminal controls the M/J type of UD303/UD423. As for other models, it is set at Low.
- Note 9 : This port is unused when the mechanical deck has one motor.

3. Cassette Deck section(2)(8 ports)

IC-NO.	Pin No.	Name	I/O	Function name	Description	Remarks
(X28)IC7	4	Q1	O	$\overline{\text{RMUTE}}$	REC MUTE	
	5	Q2	O	D-R/$\overline{\text{P}}$	Dolby REC/PLAY changeover	
	6	Q3	O	LMUTE	LINE MUTE	
	7	Q4	O	NR	Noise reduction changeover	
	14	Q5	O	$\overline{\text{A}}$/B	A/B playback changeover	
	13	Q6	O	ASEL	A normal/chrome selector	
	12	Q7	O	BSEL	B normal/chrome selector	
	11	Q8	O	BIAS	BIAS on/off control	

- Note 10 : This terminal had been set at "MS" (DPSS sensitivity switching) with a TS, but had been unused. There occurred a sound leak in the FF/RWD/search mode with the TS, and it is currently controlled as a LINE MUTE terminal.

4. CD section(8 ports)

IC-NO.	Pin No.	Name	I/O	Function name	Description	Remarks
(X32)IC6	4	Q1	O	RMR	Rotary motor control	
	5	Q2	O	BRKM	Rotary motor control	
	6	Q3	O	RMF	Rotary motor control	
	7	Q4	O	LMF	Load motor control	
	14	Q5	O	$\overline{\text{DC-CNT}}$	CD IC power supply control	
	13	Q6	O	I CRST	CD IC reset control	
	12	Q7	O	P-MON	Focus control	
	11	Q8	O	LMR	Load motor control	

CIRCUIT DESCRIPTION

5. Digital echo : M65844P (X09 : IC8)

5.1 Pin Connection

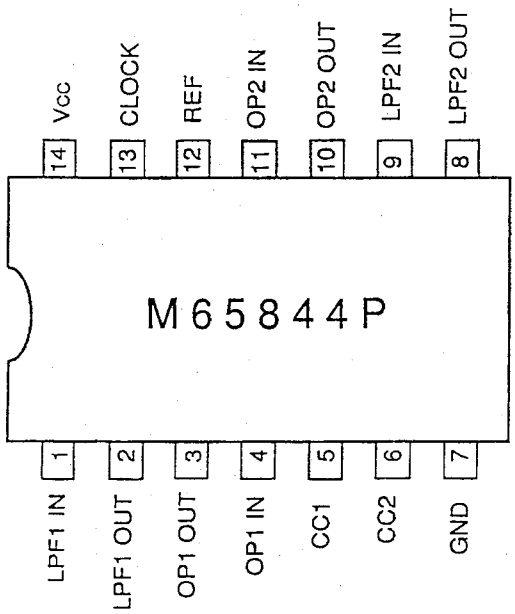

5.2 Block diagram

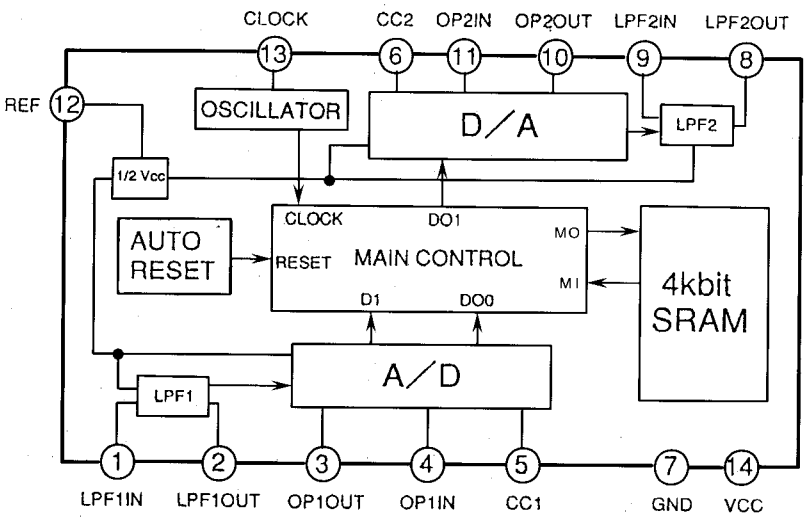

5.3 Pin description

Pin No.	Name	I/O	Discription
1	LPF1 IN	I	Input side L.P.F. with outside C.R.
2	LPF1 OUT	O	
3	OP1 OUT	O	A/D converted integrator with outside C.
4	OP1 IN	I	
5	CC1	-	A/D convertor ADM control
6	CC2	-	D/A convertor ADM control
7	GND	-	GND
8	LPF2 OUT	O	Input side L.P.F. with outside C.R.
9	LPF2 IN	I	
10	OP2 OUT	O	D/A converted integrator with outside C.
11	OP2 IN	I	
12	REF	-	Analog reference voltage ≒ 1/2Vcc
13	CLOCK	I	Generator(220KHz)with outside C.R.
14	Vcc	-	Power supply 4.5V ～5.5V(Specification)

RXD-F3/F4/F41/F42

CIRCUIT DESCRIPTION

6. KEY CONTROL IC : 65840SP (X11 : IC1)

6.1 Block diagram

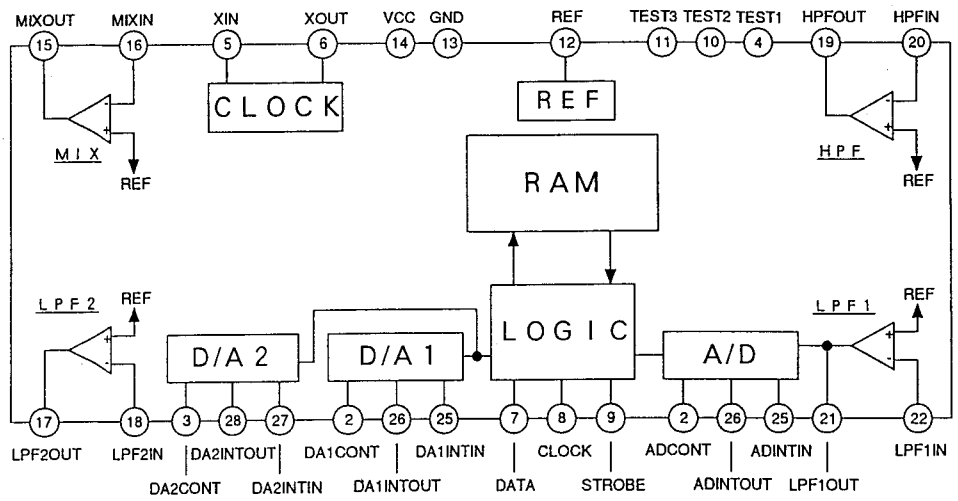

6.2Pin connection

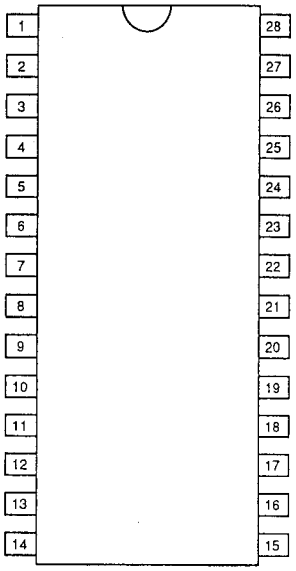

6.3 Pin description

PIN NO.	NAME	I/O	DESCRIPTION
1	ADCONT	O	Decide fitness time constant of ADM system A/D convert.
2	DA1CONT	O	Decide fitness time constant of ADM system D/A1 convert.
3	DA2CONT	O	Decide fitness time constant of ADM system D/A2 convert.
4	TEST1	O	L:NORMAL mode H:TEST mode
5	XIN	I	Connect 16MHz ceramic filter.
6	XOUT	O	
7	DATA	I	Serial bus DATA input
8	CLOCK	I	Serial bus CLOCK input
9	STROBE	I	Serial bus STROBE input
10	TEST2		N.C.(Open)
11	TEST3		N.C.(Open)
12	REF		1/2Vcc output,Connect filter C.
13	GND	-	GND
14	VCC		Power supply
15	MIXOUT	O	Mix key control low signal and through high signal.
16	MIXIN	I	
17	LPF2OUT	O	Post filter after converted D/A of the key control.
18	LPF2IN	I	
19	HPFOUT	O	L.P.F. of through high signal.
20	HPFIN	I	
21	LPF1OUT	O	Pre filter before converted A/D of the key control.
22	LPF1IN	I	
23	ADINTIN	I	A/D converted integrator with outside C.
24	ADINTOUT	O	
25	DA1INTIN	I	D/A1 converted integrator with outside C.
26	DA1INTOUT	O	
27	DA2INTIN	I	D/A2 converted integrator with outside C.
28	DA2INTOUT	O	

CIRCUIT DESCRIPTION

7. DOLBY IC : HA12182F(X28 : IC3)

7.1 Block diagram/pin connection

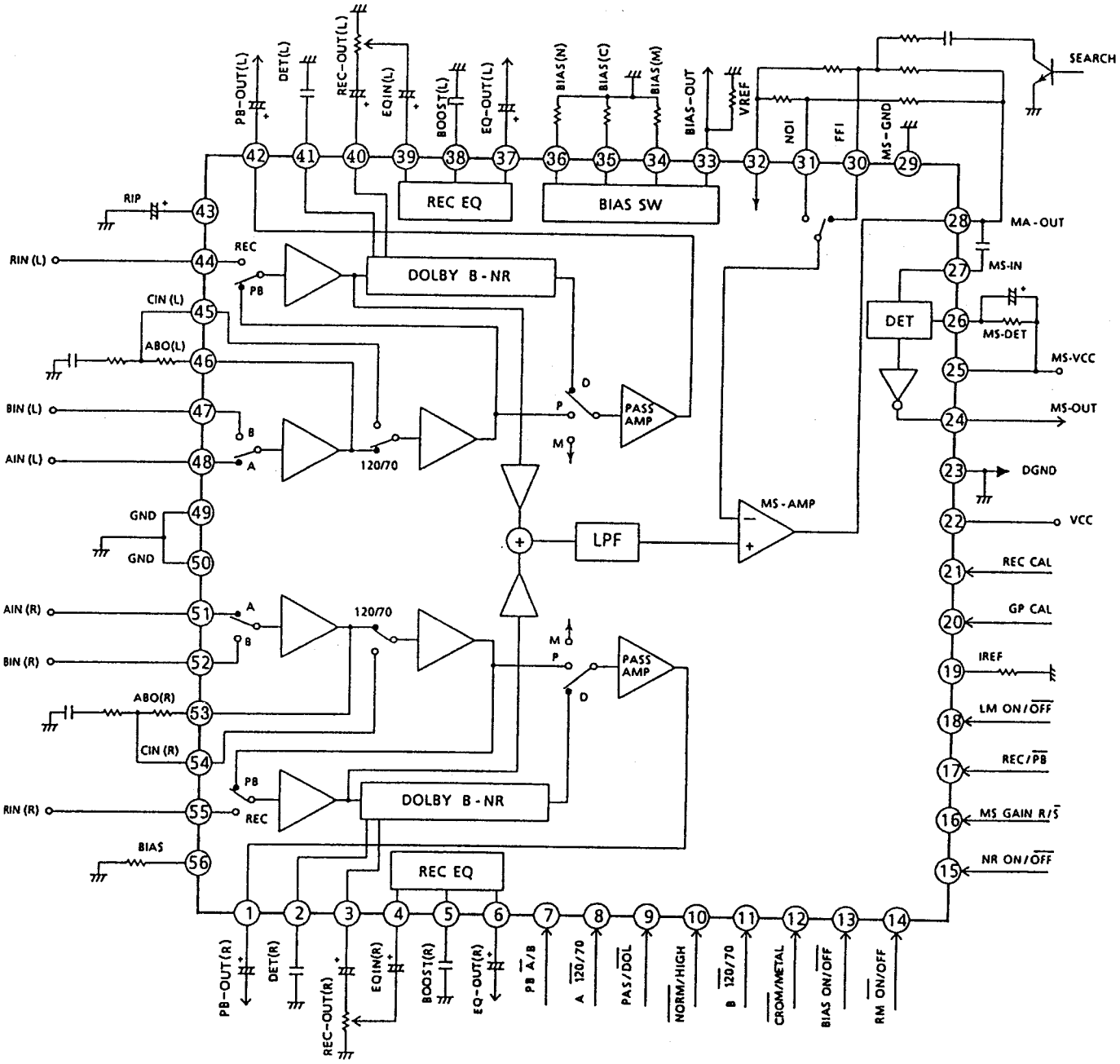

CIRCUIT DESCRIPTION

7.2 Pin description

Pin No.	Name	Function
1	PBOUT(R)	PB output
2	DET(R)	Decided NR time constant
3	RECOUT(R)	REC output
4	EQIN(R)	REC EQ input
5	BOOST(R)	Decide low frequency boost time constant
6	EQOUT(R)	EQ output
7	PB $\overline{A}$/B	Mode decided input
8	A$\overline{120}$/70	Mode decided input
9	PASS/$\overline{DOL}$	Mode decided input
10	$\overline{NORM}$/HIGH	Mode decided input
11	B$\overline{120}$/70	Mode decided input
12	$\overline{CROM}$/METAL	Mode decided input
13	BIAS ON/$\overline{OFF}$	Mode decided input
14	RM $\overline{ON}$/OFF	Mode decided input
15	NR ON/$\overline{OFF}$	Mode decided input
16	MS GAIN R/$\overline{S}$	Mode decided input
17	REC/$\overline{PB}$	Mode decided input
18	LM ON/$\overline{OFF}$	Mode decided input
19	IREF	EQ reference current input
20	GPCAL	GP comparated terminal
21	RECCAL	REC gain comparated terminal
22	Vcc	Power supply
23	D-GND	Digital in/output reference voltage
24	MSOUT	MS output(to MPU)
25	MS-Vcc	Power supply
26	MSDET	Decided MS time constant
27	MSIN	MS input
28	MAOUT	MS AMP output
29	MS-GND	GND
30	FFI	MS(FF,REW) return input
31	NOI	MS(Normal) return input
32	VREF	MS reference output
33	BIASOUT	REC bias output
34	BIAS(M)	REC bias current input
35	BIAS(C)	REC bias current input
36	BIAS(N)	REC bias current input
37	EQOUT(L)	EQ output
38	BOOST(L)	Decide low frequency boost time constant
39	EQIN(L)	REC EQ input
40	RECOUT(L)	REC output
41	DET(L)	Decided NR time constant
42	PBOUT(L)	PB output
43	RIP	Ripple filter
44	RIN(L)	REC input
45	CIN(L)	70 μ buffer input
46	ABO(L)	PB input buffer output

Pin No.	Name	Function
47	BIN(L)	B deck PB input
48	AIN(L)	A deck PB input
49	GND	GND
50	GND	GND
51	AIN(R)	A deck PB input
52	BIN(R)	B deck PB input
53	ABO(R)	PB input buffer output
54	CIN(R)	70 μ buffer input
55	RIN(R)	REC input
56	BIAS	Dolby bias current input

*MS : Music Sensor

7.3 HA12182F : PARALLEL-DATA

Pin NO. QFP- 56	Pin name	Lo	Hi
7	PB $\overline{A}$/B	A in ACTIVE *1	B in ACTIVE *1
8	A$\overline{120}$/70	*1	*1
9	PAS/ $\overline{DOL}$	DOLBY NR	PASS AMP ACTIVE
10	NORM/ HIGH	NORMAL	Hi-SPEED
11	B$\overline{120}$/70	*1 *2	*1 *2
12	CROM / METAL	*2	*2
13	BIAS ON /$\overline{OFF}$	BIAS OFF	BIAS ON
14	RM $\overline{ON}$/OFF	EQOUT MUTE	EQOUT MUTE OFF
15	NR ON/$\overline{OFF}$	DOLBY NR OFF	DOLBY NR ON
16	MS GAIN R/$\overline{S}$	SEARCH	REPEAT
17	REC/ $\overline{PB}$	PB (DECODE)	REC (ENCODE)
18	LM ON/$\overline{OFF}$	PBOUT MUTE OFF	PBOUT MUTE

Note) "Lo " when pin open.

*1 PB EQ LOGIC

A$\overline{120}$/70	B$\overline{120}$/70	PB $\overline{A}$/B	
		L	H
L	L	FLAT	FLAT
L	H	FLAT	70y
H	L	70 μ	FLAT
H	H	7o μ	70 μ

*2 REC BIAS LOGIC

		$\overline{CROM}$ / METAL	
		L	H
B$\overline{120}$/70	L	NORMAL (I)	NORMAL(I)
	H	CROM (II)	METAL(IV)

CIRCUIT DESCRIPTION

8. CD DSP : CXD2508AQ (X32 : IC2)

8.1 Pin connection

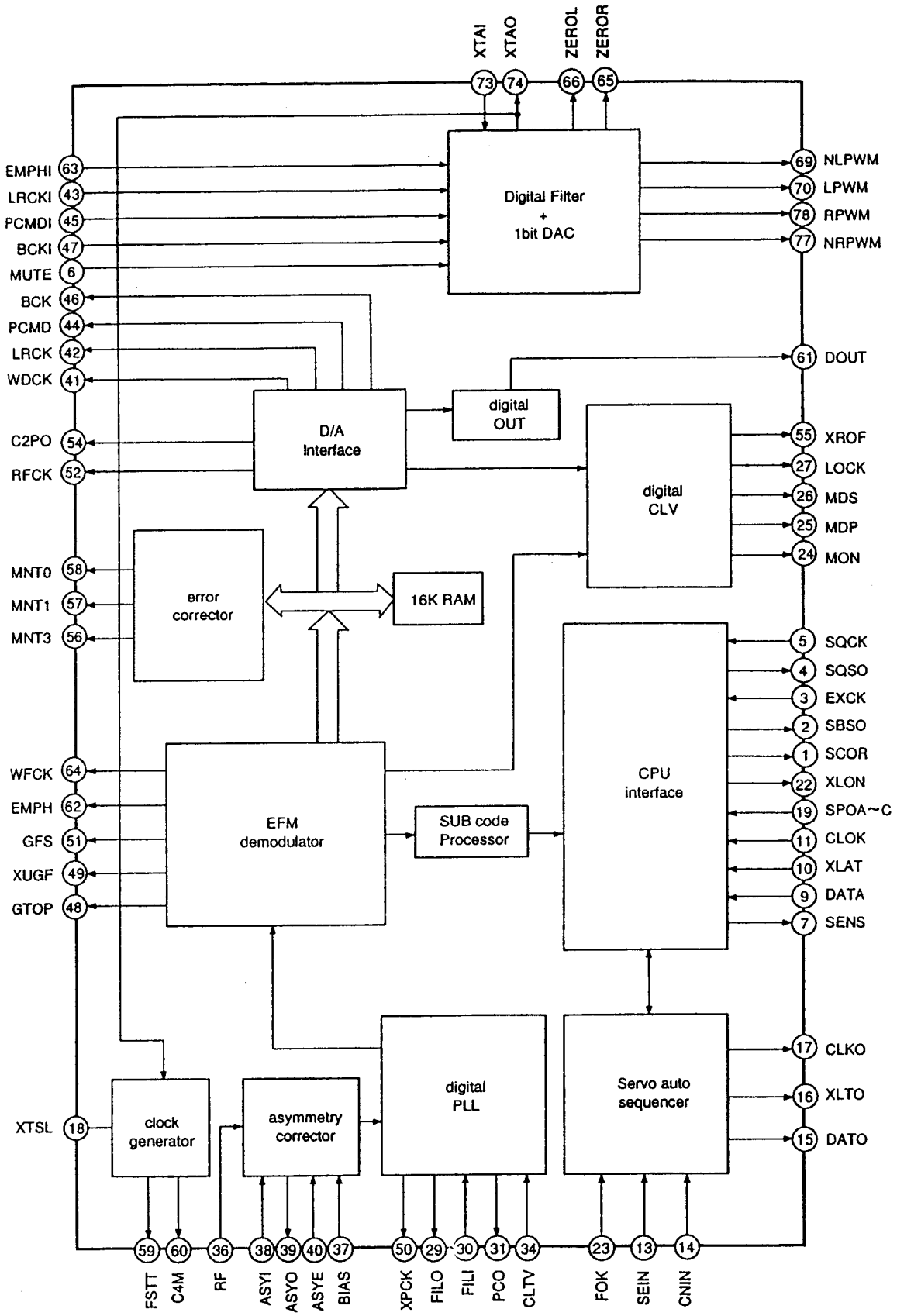

CIRCUIT DESCRIPTION

8.2 Pin description

Pin NO. Q	Name	I/O	Description
1	SCOR	O	Sub code sink output H : Detected S0 or S1
2	SBSO	O	SUBP ~ W serial output
3	EXCK	I	SBSO read out clock input
4	SQSO	O	SUBQ80BIT serial output
5	SQCK	I	SQSO read out clock input
6	MUTE	I	H : ON, L : OFF
7	SENS	O	SENS output, output to CPU
8	XRST	I	System reset, L : RESET
9	DATA	I	Serial data input from CPU
10	XLAT	I	Latch input from CPU, Latched serial data on falling edge
11	CLOK	I	Serial data transmission clock input from CPU
12	Vss		GND
13	SEIN	I	Sense input from SSP
14	CNIN	I	Track jump Q'ty count signal input
15	DATO	O	Serial data output to SSP
16	XLTO	O	Serial data latch output for SSP, Latched on falling edge.
17	CLKO	O	Serial data transmission clock output to SSP.
18	SPOA	I	Expander μ -Com interface(Input A)
19	SPOB	I	Expander μ -Com interface(Input B)
20	SPOC	I	Expander μ -Com interface(Input C)
21	XTSL	I	Selected Xtal input, L : 16.9344MHz H : 33.8688MHz
22	XLON	O	μ -Com expander interface(Output)
23	FOK	I	Focus OK input. Use SENS output and servo auto sequencer.
24	MON	O	Spindle motor ON/OFF control output
25	MDP	O	Spindle motor servo control
26	MDS	O	Spindle motor servo control
27	LOCK	O	Sampling 460Hz on GES, GFS H : H 8Times L : L
28	TEST	I	TEST terminal, normal use GND.
29	FILO	O	Master PLL(Slave = Digital PLL) filter output.
30	FILI	I	Master PLL filter input
31	PCO	O	Master PLL charge pump output.
32	VDD		DSP digital power supply
33	AVss1		DSP analog power GND
34	CLTV	I	Master PLL VCO control voltage input.
35	AVDDI		DSP analog power supply
36	RF	I	EFM signal input
37	BIAS	I	Asymmetry revision circuit fixed current input.
38	ASYI	I	Asymmetry revision circuit comparator voltage input.
39	ASYO	O	EFM full swing output L =Vss, H = VDD
40	ASYE	I	L:Asymmetry revision OFF, H: Asymmetry revision ON
41	WDCK	O	48bit slot D/A interface, world clock(2FS)
42	LRCK	O	48bit slot D/A interface LR clock(FS)
43	LRCKI	I	LR clock input(48bit slot) for DAC
44	PCMD	O	D/A interface, serial data(2'SCOMP,MSB first)
45	PCMDI	I	Audio data input(48bit slot) for DAC

CIRCUIT DESCRIPTION

Pin NO. Q	Name	I/O	Description
46	BCK	O	D/A interface, bit clock
47	BCKI	I	Bit clock input(48bit slot) for DAC
48	GTOP	O	GTOP output
49	XUGF	O	XUGF output
50	XPCK	O	XPLCK output
51	GFS	O	GFS output
52	RFCK	O	RFCK output
53	Vss		GND
54	C2PO	O	C2PO output
55	XROF	O	XRAOF output
56	MNT3	O	MNT3 output
57	MNT 1	O	MNT1 output
58	MNT0	O	MNT0 output
59	FSTT	O	Output 2/3 divided f of 33,8688MHz
60	C4M	O	4.2336MHz output
61	DOUT	O	Digital output
62	EMPH	O	CD Emphasis H : EX1ST L : Non
63	EMPHI	I	DAC demphasis ON/OFF, H : ON, L : OFF
64	WFCK	O	WRITE FRAME CLOCK output
65	ZEROL	O	No sound data detected output, H : No sound(Lch)
66	ZEROR	O	No sound data detected output, H : No sound(Rch)
67	DTS 1	I	DAC test terminal 1, normal L
68	VDD		DAC Digital power supply
69	NLPWM	O	Lch PWM output(Reverse phase)
70	LPWM	O	Lch PWM output(Normal phase)
71	AVDD2		PWM driver power supply
72	AVDD3		Xtal power supply
73	XTAI	I	33.8688MHz Xtal OSC input
74	XTAO	O	33.8688MHz Xtal OSC output
75	AVss3		Xtal GND
76	AVss2		PWM driver GND
77	NRPWM	O	Rch PWM output(Reverse phase)
78	RPWM	O	Rch PWM output(Normal phase)
79	DTS2	I	DAC test terminal 2, normal L
80	DTS 3	I	DAC test terminal 3, normal L

NOTES:

-"PCMD" is 2-S complementary output of "MSB First."

- "GTOP" is used to monitor the protective conditions of FrameSync (where "H" indicates "Sync protective window open").

-"XUGF" is a FrameSync obtained from the EFM signal, which is a negative pulse. This is a signal before Sync protection.

- "XPLICK" means to reverse the EFM PLL clock. The PLL is designed to match the falling edge with the changing point of the EFM signal.

- "GFS signal" is a signal that causes "H" when the FrameSync is matched with interpolation protective timing.

-"RFCK" is a 136- µsec. cycle signal that can be obtained at Xtal accuracy.

-"C2PO" is a signal that indicates the error status of the data.

- "XRAOF" is a signal that occurs when the 16K RAM exceeds the jitter margin of ±4F.

ADJUSTMENT

CD section

No.	ITEM	INPUT SETTING	OUTPUT SETTING	PLAYER SETTING	ALIGNMENT POINT	ALIGN FOR	FIG.
1	LASER POWER	-	Set the senor section of the optical power meter on the pickup lens.	Press CD key and turn the power on to enter the test mode.Press the"REPEAT"key to check that the display is "03".	-	On the power from.0.05 to 0.15mw. when the diffraction grating is correctly aligned with the RF level of 0.8Vp-p or more	(a)
2	TRACKING ERROR BALANCE	Test disc Type 4	Connect an oscilloscope as follows. CH1 : RF (CN2-1) CH2 : TE (CN2-6)	Load disc and set to test mode.Confirm the display is"03".	TE BALANCE VR3	Symmetry between upper and lower or DC=0±0.05V	
3	FOCUS ERROR BALANCE	Test disc Type 4	Connect an oscilloscope as follows. CH1 : RF(CN2-1) CH2 : TE(CN2-6)	Press the PLAY key. Confirm that the display is"05"	FE BALANCE VR4	Optimum eye pattern	
4	TRACKING GAIN	Test disc Type 4 Apply signal of 1.0kHz, 50mVrms to CN2 pin 5-6.	Connect a LPF to CN2 pin 5-6 to which connect an oscilloscope or AC voltmeters.	Press the PLAY key. Confirm that the displays"05"	TRACKING GAIN VR1	Two VTVMs should read the same value.	(e)

Note:
Type 4disc :SONY YEDS-18 Test Disc or equivalent.
LPF : Around 47kΩ + 390pF or so.
Step 1 ~ 5 are in Test Mode.

(a) Laser Power

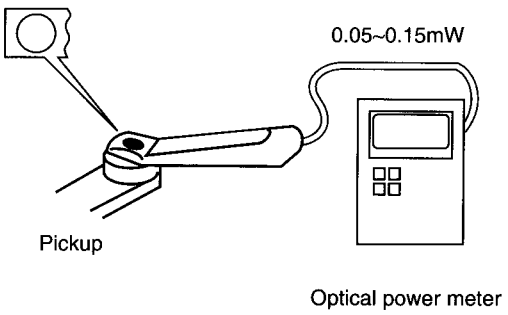

(e) Tracking Gain Adj.

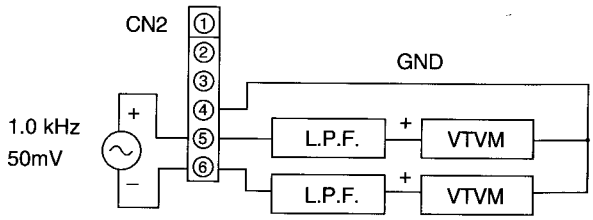

CD test mode input method : While depressing the CD key, plug the power cord into an AC power outlet.

NO.	KEY	OPERATION	TRACK NO. DISPLAY
1	PLAY	Clamp DISC 1 1. FOCUS SERVO .....ON 2. TRACKING SERVO .....ON 3. FEED SERVO .....ON	05
2	REPEAT	1.FOCUS SERVO .....ON 2. TRACKING SERVO .....OFF 3. FEED SERVO .....OFF	03
3	DISC1	PLAY T NO.16	16
4	STOP	STOP	01
5	DISC2	SELECTED DISC1, SHIPMENT POSITION.	— — —

ADJUSTMENT

FIG. (b)

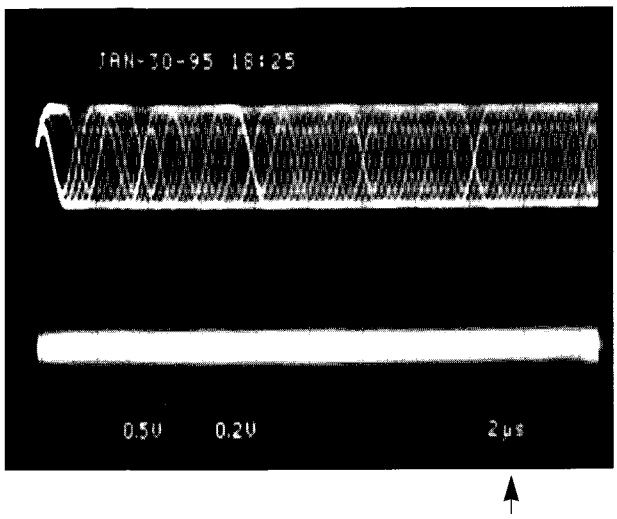

CH1
RF signal

◄VC

◄ 0 (V)

CH2
TE signal

- RF signal and TE signal in test mode (PLAY).

FIG. (c)

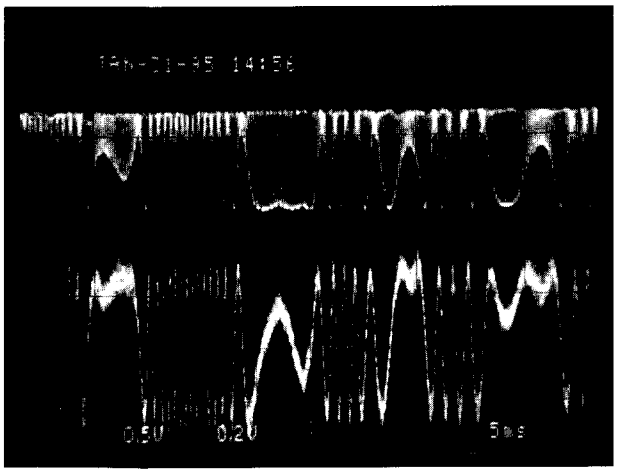

CH1
RF signal

◄VC

◄VC

CH2
TE signal

- RF signal and TE signal in test mode (Focusing servo ON / Tracking servo OFF). (Disc Type 4)
- Adjust TE signal so that the waveform is symmetrical in relation to VC. VR 3 (TE BALANCE)

FIG. (d)

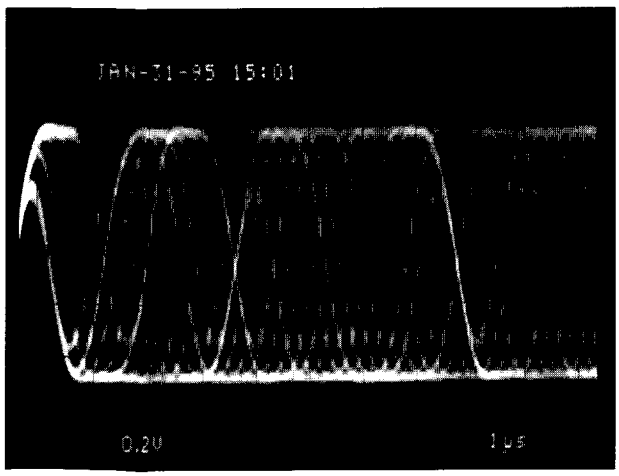

RF signal
: AC coupled

- RF signal in test mode (PLAY).
- Perform the tangential and focusing offset are focused into one point on the display. The crossing points above and below the center shall also be looked clearly.

ADJUSTMENT

Fig (f)

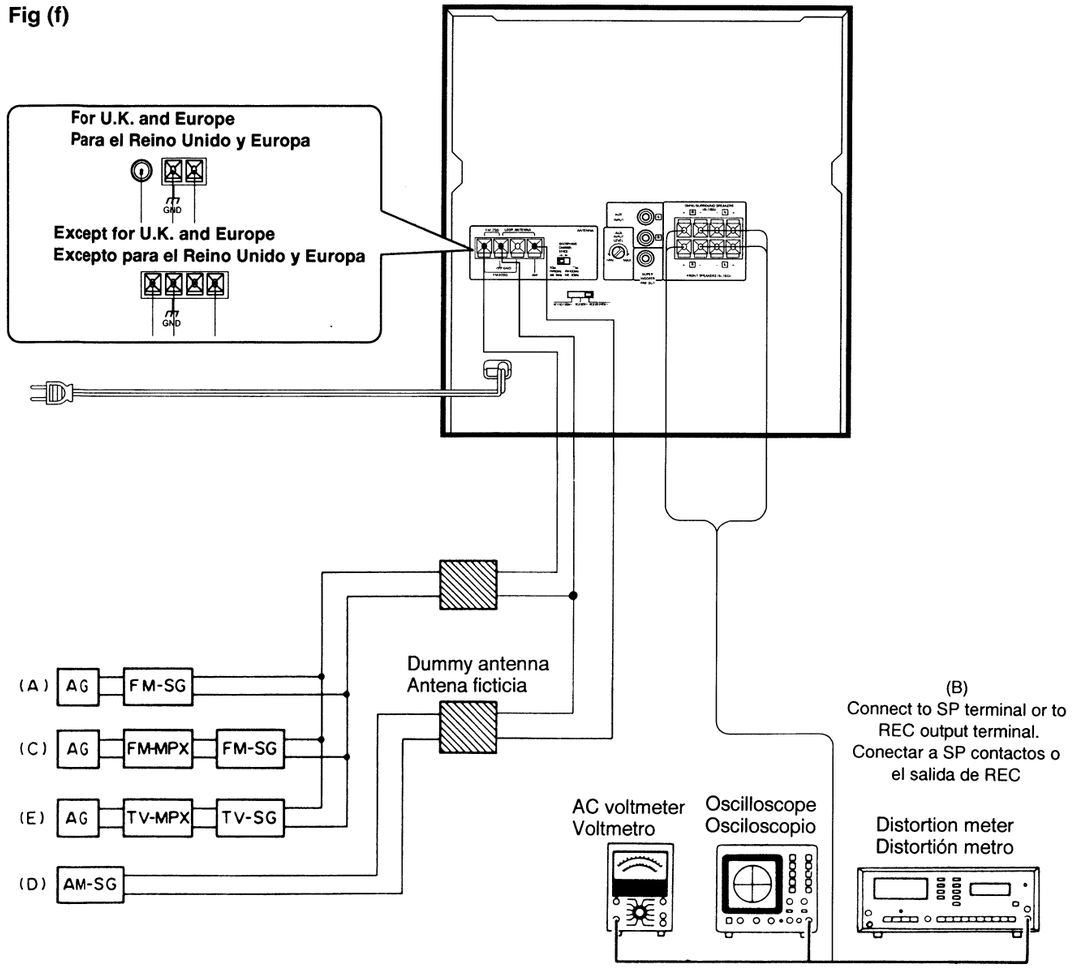

REC output : for X28 L ch, connect CN 5 pin 1 ;
for X28 R ch, connect CN5 pin 4.

Salida de REC : X28 canal izp., Conectar CN 5 contactos no 1 a masa.
X28 canal dch., Conectar CN 5 contactos no 4 a masa.

RXD-F3/F4/F41/F42

AJUSTES

CD seccíon

No.	ITEM	AJUSTE DE ENTRADA	AJUSTE DE SALIDA	AJUSTE DE REPRODUCTOR	PUNTO DE ALINEACION	ALINEAR PARA	FIG.
1	FUERZA LASER	-	Ajuste la sección de sensor sobre el medidor de potencia ótica sobre el lente de captaclon.	Cortocircuite las espigas TEST y conectar la fuerza para entrar al modo de prueba. Oprima el botón"REPEAT" para revisar que el visualizador esté en "03"	-	Sobre la fuerza de 0.05 a 0.15mW, cuando la rejilla de difracción está correctamente alineada con el nivel de RF de 1.0Vp-p o mayor.	(a)
2	EQUILIBRIO DE ERROR DE RASTREO	Disco de prueba Tipo 4	Conecta un osciloscopio como sigue: CH1 : RF(CN2-1) CH2 : TE(CN2-6)	Cargue disco y ponga al modo de prueba. Confirme que el visualizador está en "03"	EQUILIBRIO DE TE VR 3	Simetría entre superior e inferior, ó CC = 0±0.05V	
3	EQUILIBRIO DE ERROR DE POCO	Disco de prueba Tipo 4	Conecte un osciloscopio como sigue: CH1 : RF(CN2-1) CH2 : TE(CN2-6)	Oprima el botón PLAY. Confirme que el visualizador esta en "03".	EQUILIBRIO DE FE VR 4	Optimice el patrón de ojo.	
4	GANANCIA DE RASTREO	Disco de prueba Tipo 4 Aplique la señal de 1.0 kHz, 50mVrms a espigas 5-6 de CH.	Conecte un LPF a espigas 5-6 de CH, a que conecte un osciloscopio o voltimetro de CA.	Oprima el botón PLAY. Confirme que el visualizador está en "05".	GANANCIA DE RASTREO VR1	Dos VTVMs deberán indicar el mismo valor.	(e)

(a) Fuerza de Láser

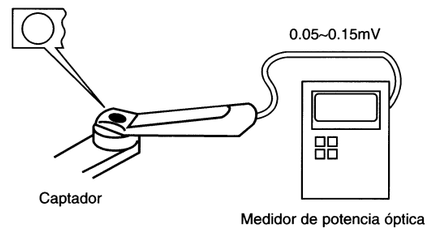

(e) Ajuste de Ganancia de Rastreo

Ajuste de ganancia de rastreo.

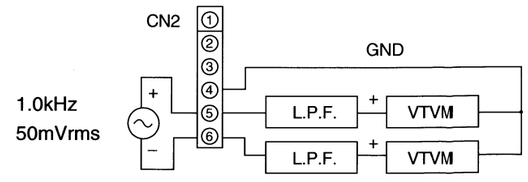

Ajuste del Modo de Prueba: insertar la clavija AC en la salida de CA presionando el botón CD.

NO.	Botón	Función	indicación NO. Pista
1	PLAY	Fijar el Disco 1 1. FOCUS SERVO .....ON 2. TRACKING SERVO .....ON 3. FEED SERVO .....ON	05
2	REPEAT	1. FOCUS SERVO .....ON 2. TRACKING SERVO.....OFF 3. FEED SERVO.....OFF	03
3	DISC1	Se inicia el PLAY a partir del Tno. 16	16
4	STOP	.Parada	01
5	DISC2	Seleccionar el Disco 1 para ponerto en el estado de despacho	—

ADJUSTMENT

Cassette Deck section

No	ITEM	INPUT SETTING	OUTPUT SETTING	DECK SETTING	ALIGNMENT POINT	ALIGN FOR	FIG.
Unless otherwise specified, set the respective switches as follows: 0dBs=0.775V TAPE : NORMAL DOLBY : OFF REC OUT : Lch (X28,CN5 ①pin), Rch (X28,CN5 ④pin) I. Cassette mechanism unit (Adjustment of the REC / PLAY head)							
〈1〉	Demagnetization and cleaning	—	—	Power : OFF Demagnetiza-tion,cleaning, PLAY	Recording head, erase head,capstan pinch roller	Demagnetize the REC / PLAY head with the head eraser.Clean the REC / PLAY head, erase head,capstan and pinch roller using a cotton swab slightly damped with alcohol.	
〈2〉	Azimuth of the REC/PLAY head	SCC–1727 TCC–153 MTT–114 10kHz, – 10dB	(B)	PLAY	FWD RVS	Adjust the output to maximum and adjust the azimuth adjustment screw for the Lissajours waveform pattern of the oscilloscope to become close to a 45° straight line.	
II. PC BOARD ADJUSTMENT							
〈1〉	TAPE SPEED(NORMAL)	TCC–110 MTT–111 SCC–1727 3kHz	(B)	PLAY	VR52	Adjust the tape speed so that 3kHz is obtained at the center of the tape.	
III. PC BOARD ADJUSTMENT							
〈1〉	PLAYBACK LEVEL	MTT– 150 400Hz	(B)	PLAY	A DECK VR 1(L) VR 2 (R) B DECK VR 3 (L) VR4 (R)	Adjust the playback output to -2.0dBs	
		MTT–256, SCC–1727 315Hz				Adjust the playback output to -6.0dBs	
		MTT–256U, TCC–160 315Hz				Adjust the playback output to -3.0dBs	
〈2〉	BIAS CURRENT	Adjust the AG for the output of the DECK to become 400Hz –23dBs. 400Hz/12.5kHz, (AC-223)	(B)	REC ↕ PLAY	VR7(L) VR8(R)	Record 400Hz and 12.5kHz alternately, and adjust the bias current adjustment potentiometer for the playback levels to become the +3dB.	

ADJUSTMENT

TUNER section

K.P.M.X.R, I Type (X09-)

No.	ITEM	INPUT SETTING	OUTPUT SETTING	TUNER SETTING	ALIGNMENT POINTS	ALIGN FOR	FIG.
FM SECTION		BAND : FM					
1	DISTORTION (STEREO)	(C) 98.0MHz 1kHz,±68.25 kHz dev Pilot : ±7.5kHz dev 60 dBμ(ANT input)	(B)	AUTO 98.0MHz	IFT (W02-)	Minimum distortion.	(f)

E.T.G Type (X09-)

No.	ITEM	INPUT SETTING	OUTPUT SETTING	TUNER SETTING	ALIGNMENT POINTS	ALIGN FOR	FIG.
FM SECTION		BAND : FM					
1	DISCRIMINATOR	(A) 98.0MHz 1kHz,±75 kHz dev 60 dBμ(ANT input)	Connect a DC voltmeter between TP303 and TP304. (X09-)	AUTO or MONO 98.0MHz	L3 (X09-)	0V	(f)
2	DISTORTION (STEREO)	(C) 98.0MHz 1kHz,±68.25 kHz dev Pilot : ±7.5kHz dev 60 dBμ (ANT input)	(B)	AUTO 98.0MHz	IFT (W02-)	Minimum distortion.	(f)

RXD-F3/F4/F41/F42 RXD-F3/F4/F41/F42

WIRING DAIGRAM

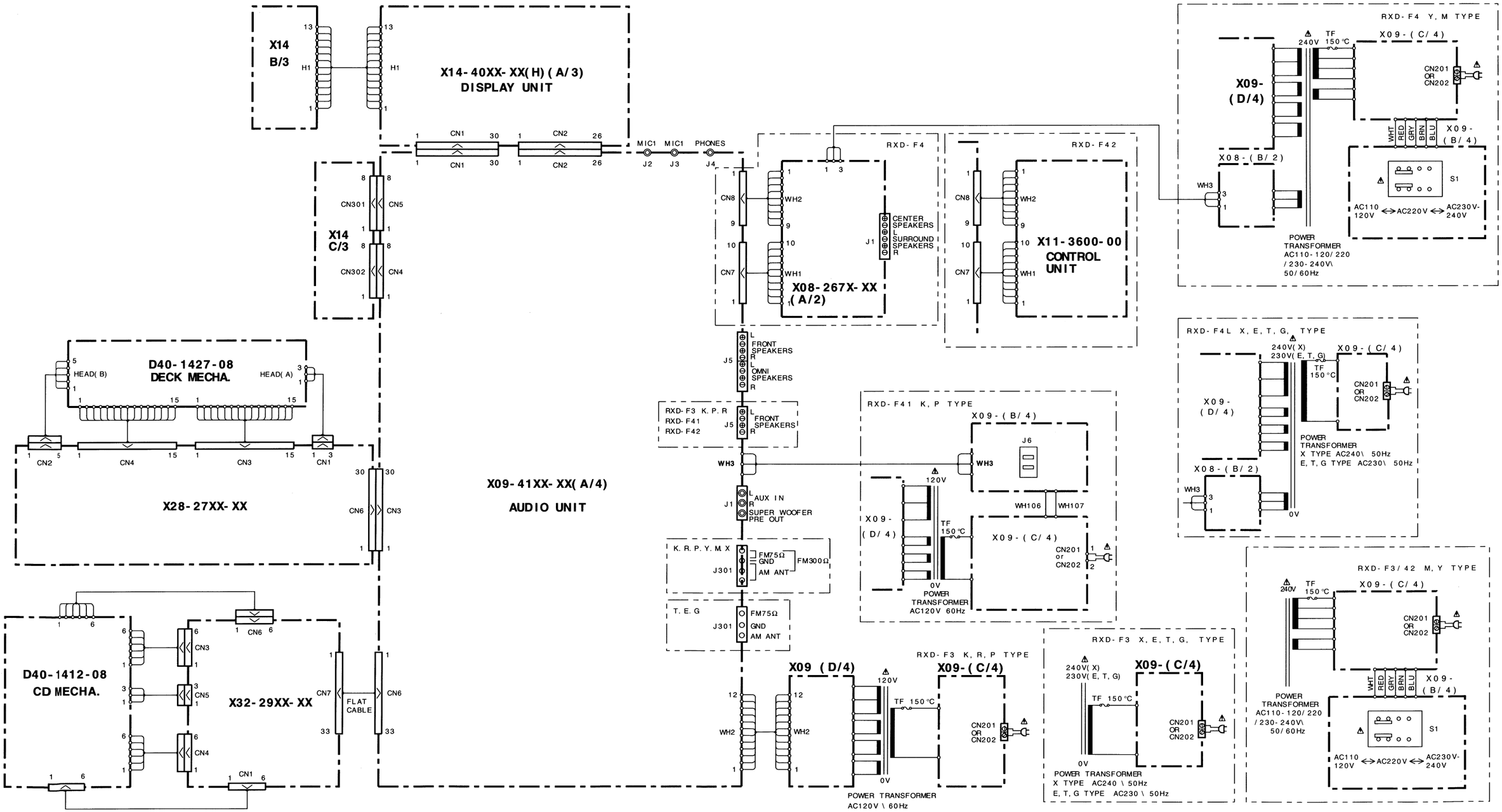

AJUSTES

Cassette Deck seccíon

Orden	Ítem	Ajuste de entrada	Ajuste de salida	Ajuste de la Deck	Puntos de ajuste	MÈtodo de ajuste	Fig.
A menos que se indique lo contrario, ajustar los interruptores respectivos de la manera siguiente: **TAPE: NORMAL DOLBY: OFF INPUT: AUX REC OUT** : IZQ. (X28, CN5 ① PIN), DCH. (X28, CN5 ④ PIN) **I. Sección del mecanismo de la cassette (ajuste de la cabeza de grabación/reproducción)**							
1	Desmagneti-zación y limpieza	—	—	Alimentación: apagado, desmagnetización, limpieza, reproducción	Cabezas de grabación, cabezas de borrado, ejes de arrastre, rodillos presores	Desmagnetizar las cabezas de grabación/reproducción con un borrador de cabezas. Limpiar las cabezas de grabación/ reproducción, cabezas de borrado, ejes de arrastre y rodillos presores con un bastoncillo de algodón humedecido en alcohol.	
2	Acimut de la cabeza de grabación/ reproducción	SCC-1727, TCC-153, MTT-144, 10kHz, -10dBs	(B)	REPRODUCCIÓN (PLAY)	FWD RVS	Maximizar la salida y ajustar de manera que la forma de Lissajous se aproxime a una Ìnea inclinada 45°	
II. Ajuste de la tarjeta de circuito impreso							
1	Velocidad de la cinta (normal)	SCC-1727, TCC-110, MTT-111, 3kHz	(B)	REPRODUCCIÓN (PLAY)	VR52	Ajustar de manera que la frecuencia sea de 3 kHz en el centro de la cinta.	
III. Ajuste de la tarjeta de circuito impreso (X28-2620-00)							
1	Nivel de reproducción	MTT-150 400Hz	(B)	REPRODUCCIÓN (PLAY)	PLATINA A: VR 1 (IZQ.) VR 2 (DCH.) PLATINA B: VR3 (IZQ.) VR4 (DCH.)	Nival de salida : -2.0 dB	
		MTT-256,SCC-1727 315Hz				Nival de salida : -6.0 dB	
		MTT-256,TCC-160 315Hz				Nival de salida : -3.0 dB	
2	Corriente de polarización	Ajustar el AG de talmanuera que la salida del chasis sea de -23 dBs en 400 Hz.	(B)	GRABACIÓN (REC) ↕ REPRODUCCIÓN (PLAY)	PLATINA B: VR7 (IZQ.) VR8 (DCH.)	Hacer la grabación en forma alterna en 400 Hz y 12.5 kHz, y ajustar el volumen de regulación de corriente de polarización de tal manera que el nivel de reproducción en 12.5 kHz sea mayor por +3dB que en caso de 400Hz.	

AJUSTES

TUNER seccíon

Tipo M.X.R, I (X09-)

No	ITEM	AJUSTES DE ENTRADA	AJUSTES DE SALIDA	AJUSTES DEL SINTONIZADOR	PUNTOS DE CALIBRACIÓN	CALIBRA R EN	FIG.
SECCIÓN DE FM		**BANDA: FM**					
1	DISTORSIÓN (ESTÉREO)	(C) 98,0 MHz 1 kHz, ±68,25 kHz desv. Piloto: ±7,5 kHz desv. 60 dBµ (entrada ANT)	(B)	AUTO 98,0 Mhz	IFT (W02-)	Distorsión mínima	(f)

Tipo E.T.G (X09-)

No	ÍTEM	AJUSTES DE ENTRADA	AJUSTES DE SALIDA	AJUSTES DEL SINTONIZADOR	PUNTOS DE CALIBRACIÓN	CALIBRA R EN	FIG.
FM SECTION		**BAND : FM**					
1	DISCRIMINADOR	(A) 98,0 MHz 1 kHz, ±75 kHz desv. 60 dBµ (entrada ANT)	Conectar un voltìmetro de CC entre TP 303 y TP304. (X05-)	AUTO o MONO 98,0 MHz	L307 (X09-)	0V	(f)
2	DISTORSIÓN (ESTÉREO)	(C) 98,0 MHz 1 kHz, ±68,25 kHz desv. Piloto: ±7,5 kHz desv. 60 dBm (entrada ANT)	(B)	AUTO 98,0 MHz	IFT (W02-)	Distorsión mínima	(f)

PC BOARD(COMPONENT SIDE VIEW) AUDIO UNIT(X09-) : K,R,P,Y,M,X type

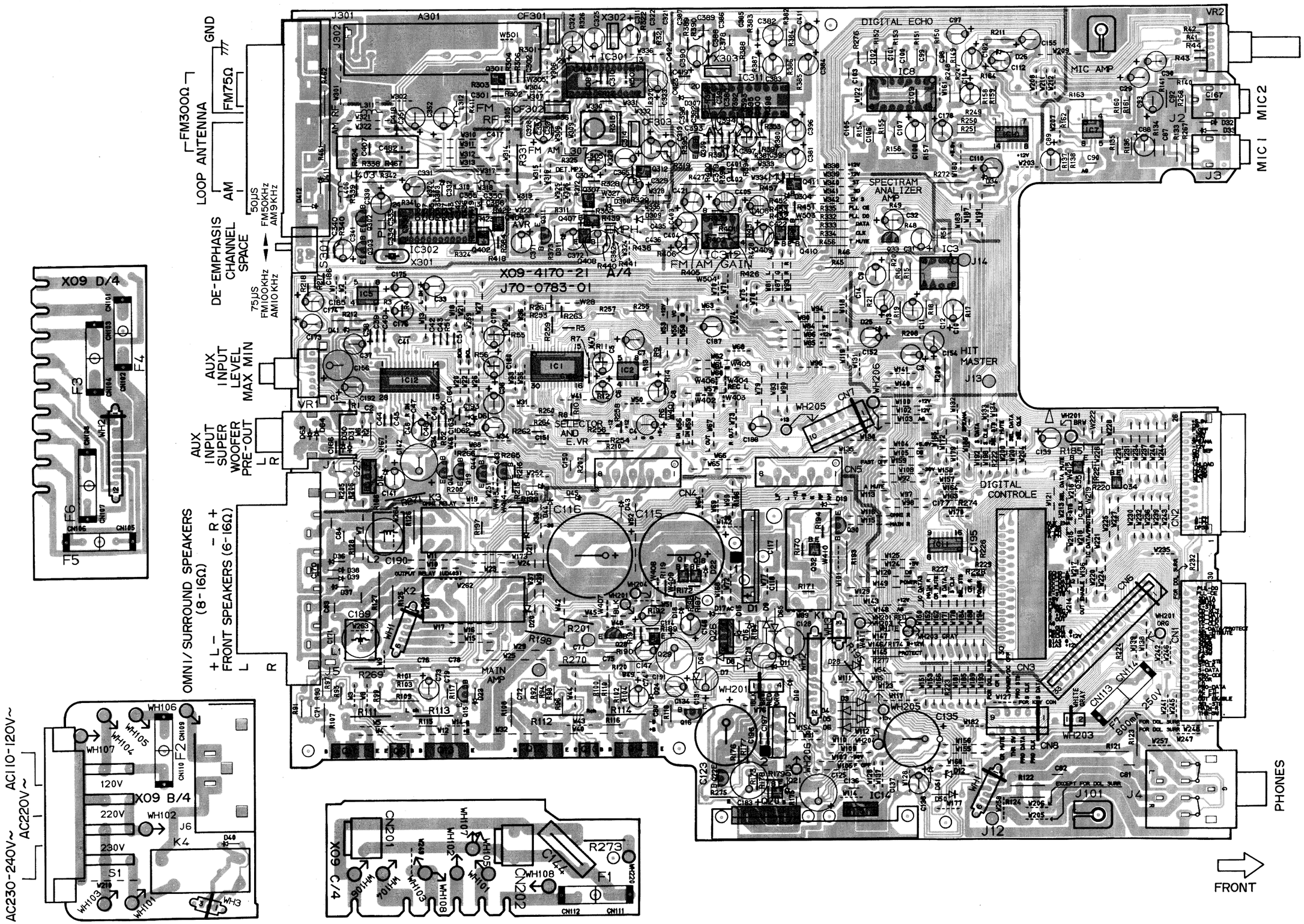

Refer to the schematic diagram for the value of resistors and capacitors.

PC BOARD(COMPONENT SIDE VIEW)

CONTROL UNIT (X11-3600-00) : RXD-F42

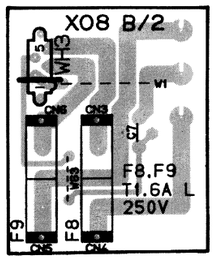

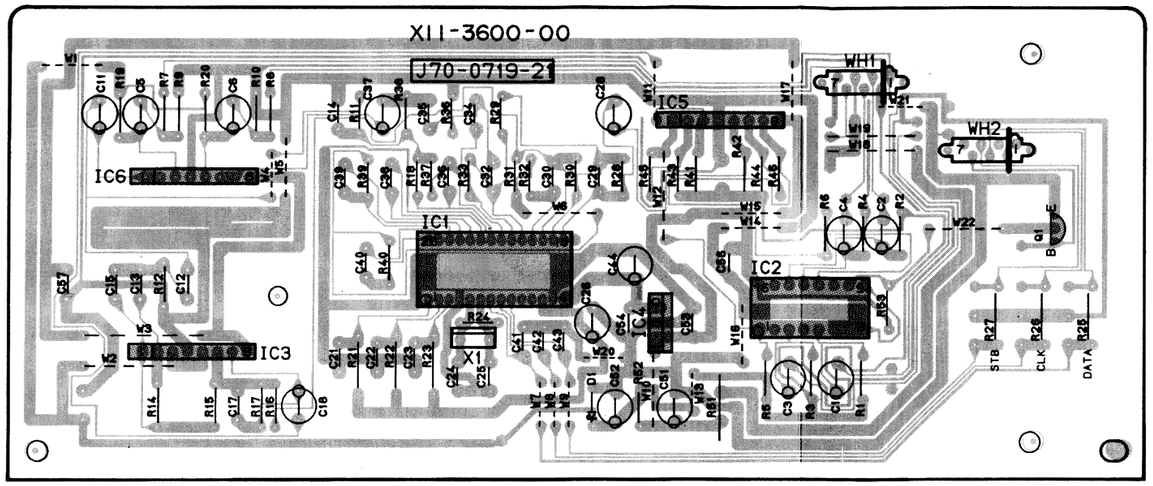

SURROUND UNIT (X08-267X-XX) : RXD-F4/F4L/F42

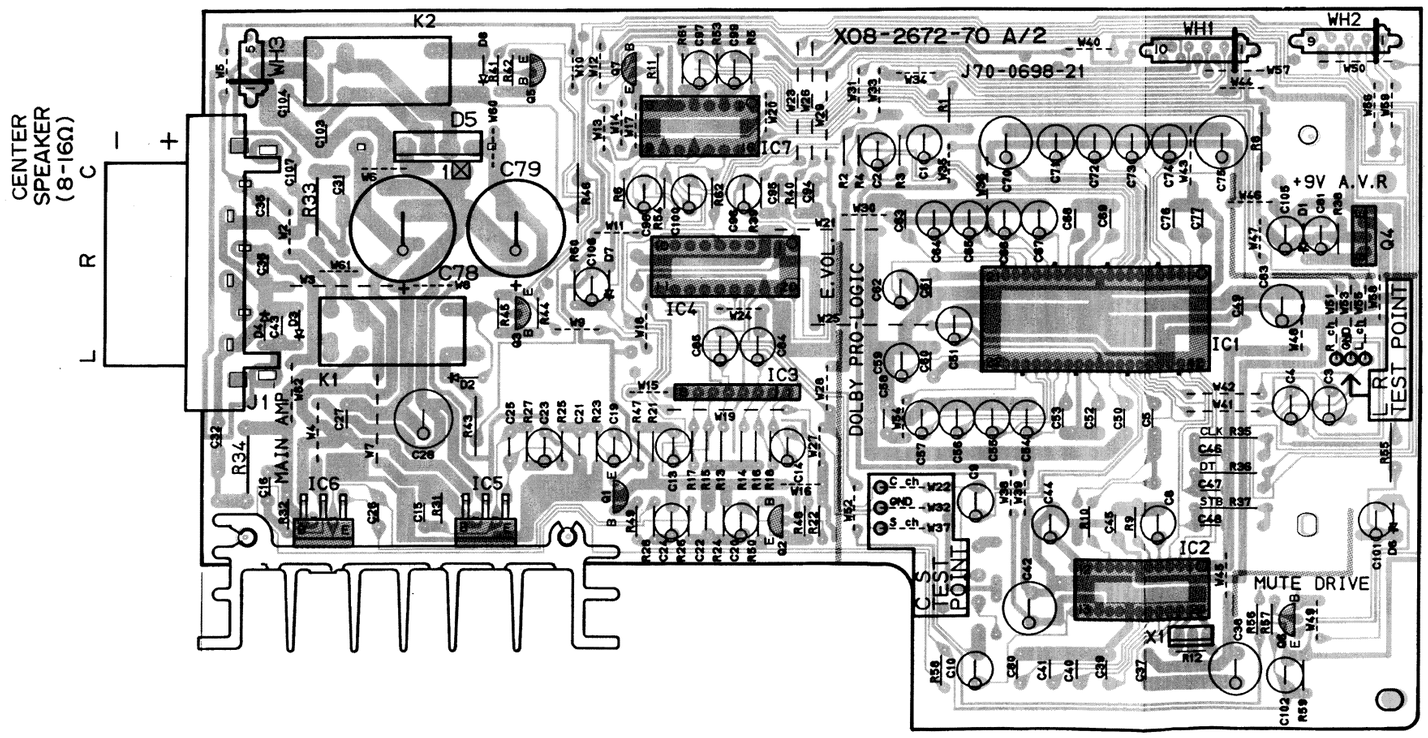

RECORD / PLAY BACK UNIT (X28-)

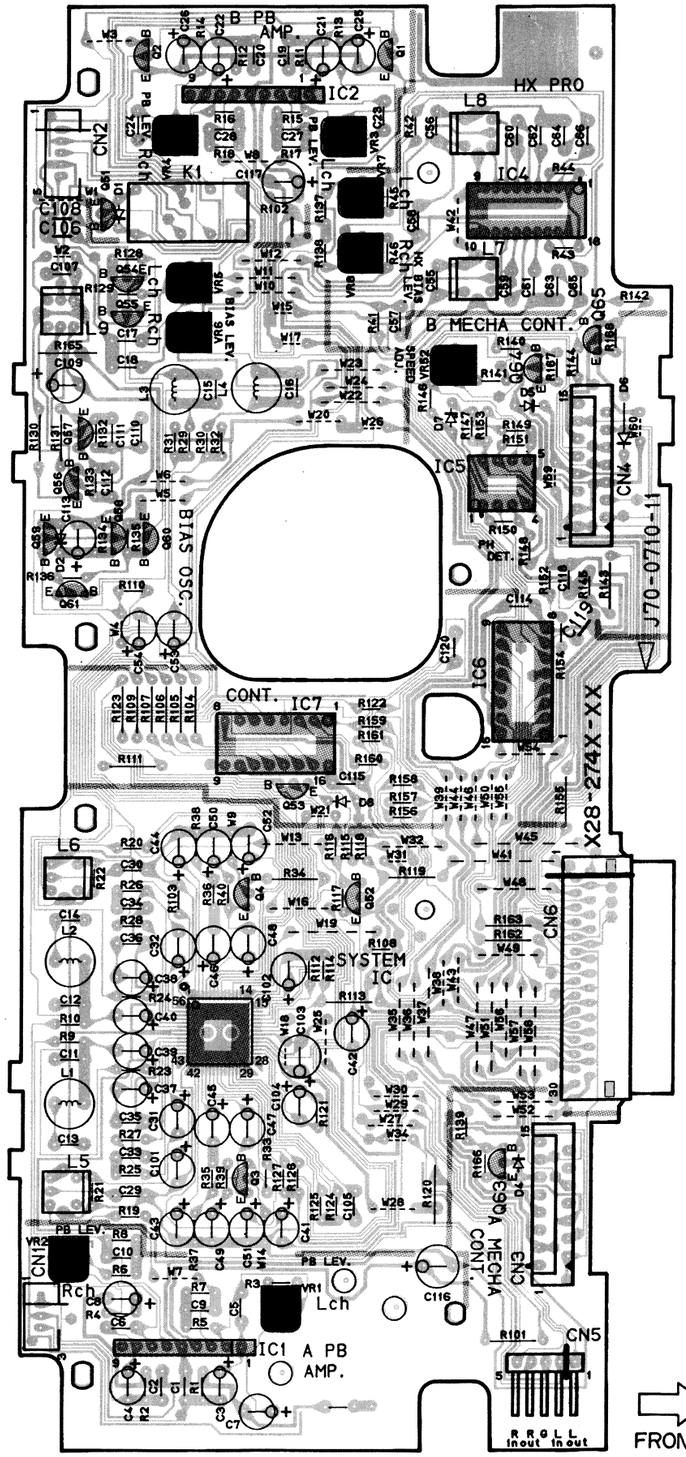

Refer to the schematic diagram for the value of resistors and capacitors.

PC BOARD(COMPONENT SIDE VIEW)

CD PLAYER UNIT(X32-)

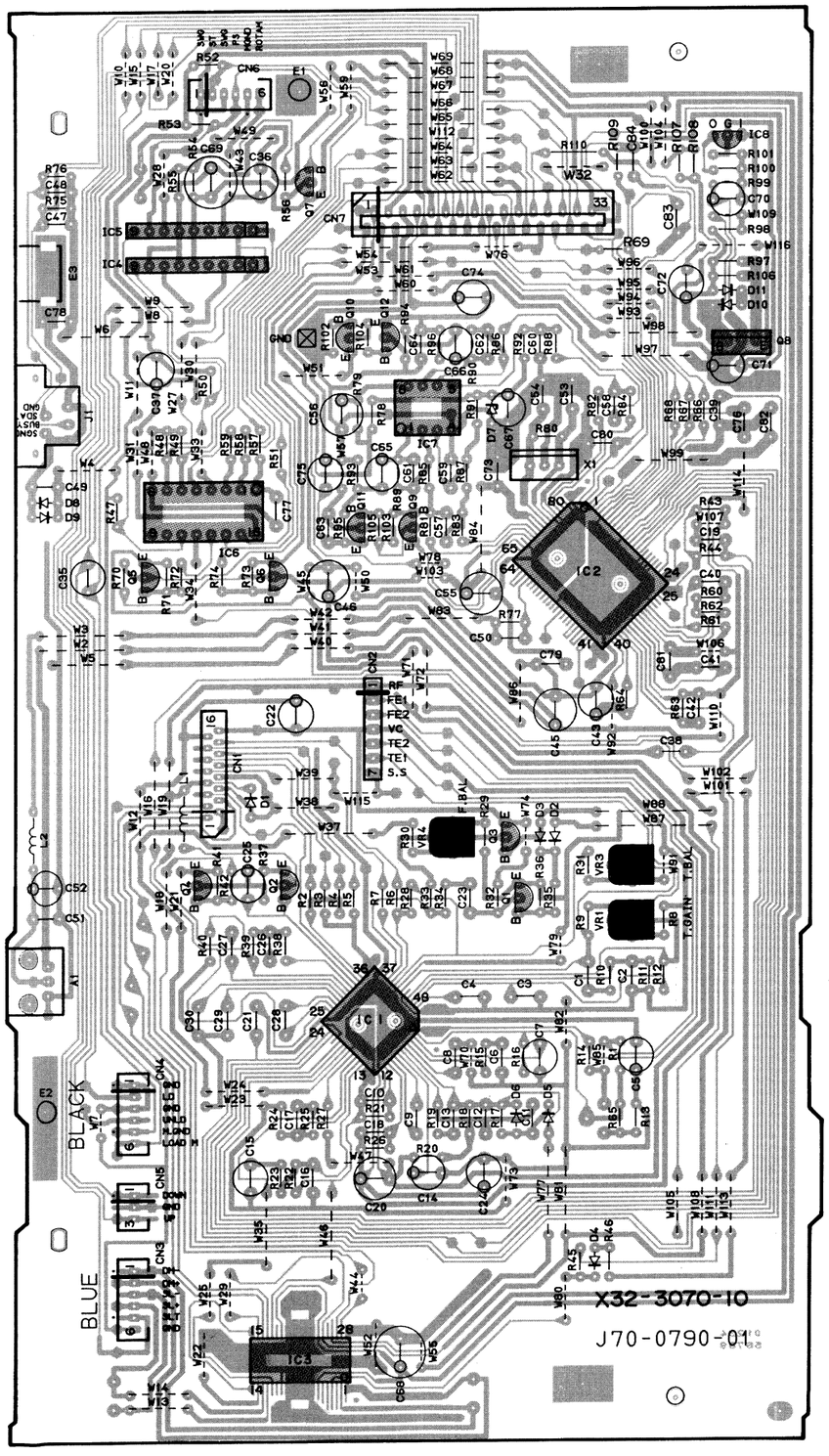

DISPLAY UNIT(X14-)

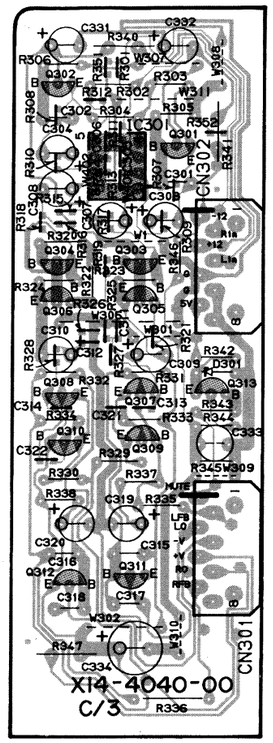

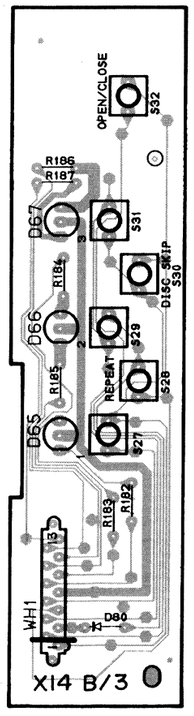

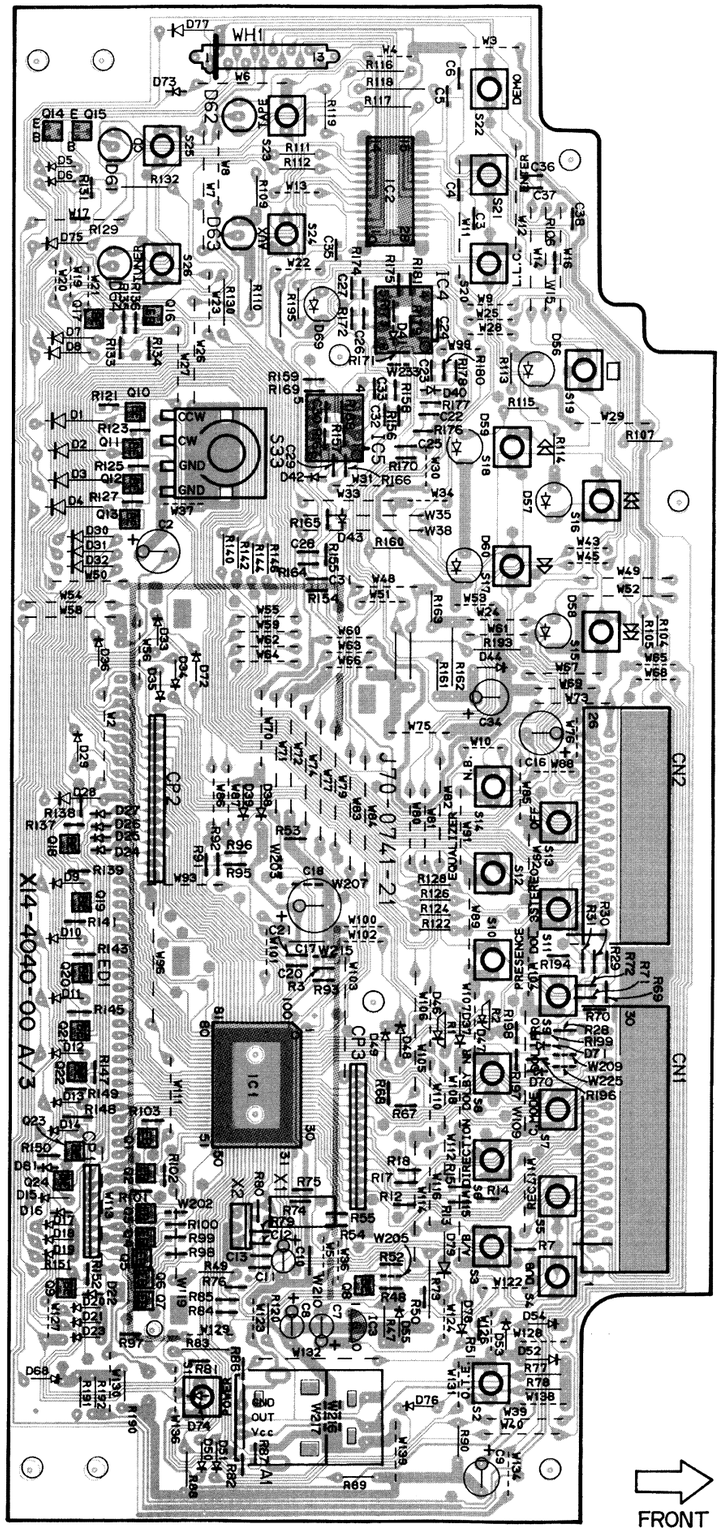

Refer to the schematic diagram for the value of resistors and capacitors.

X09-41XX-XX A/4 AUDIO(TUNER) UNIT: K, R, P, Y, M, X TYPE

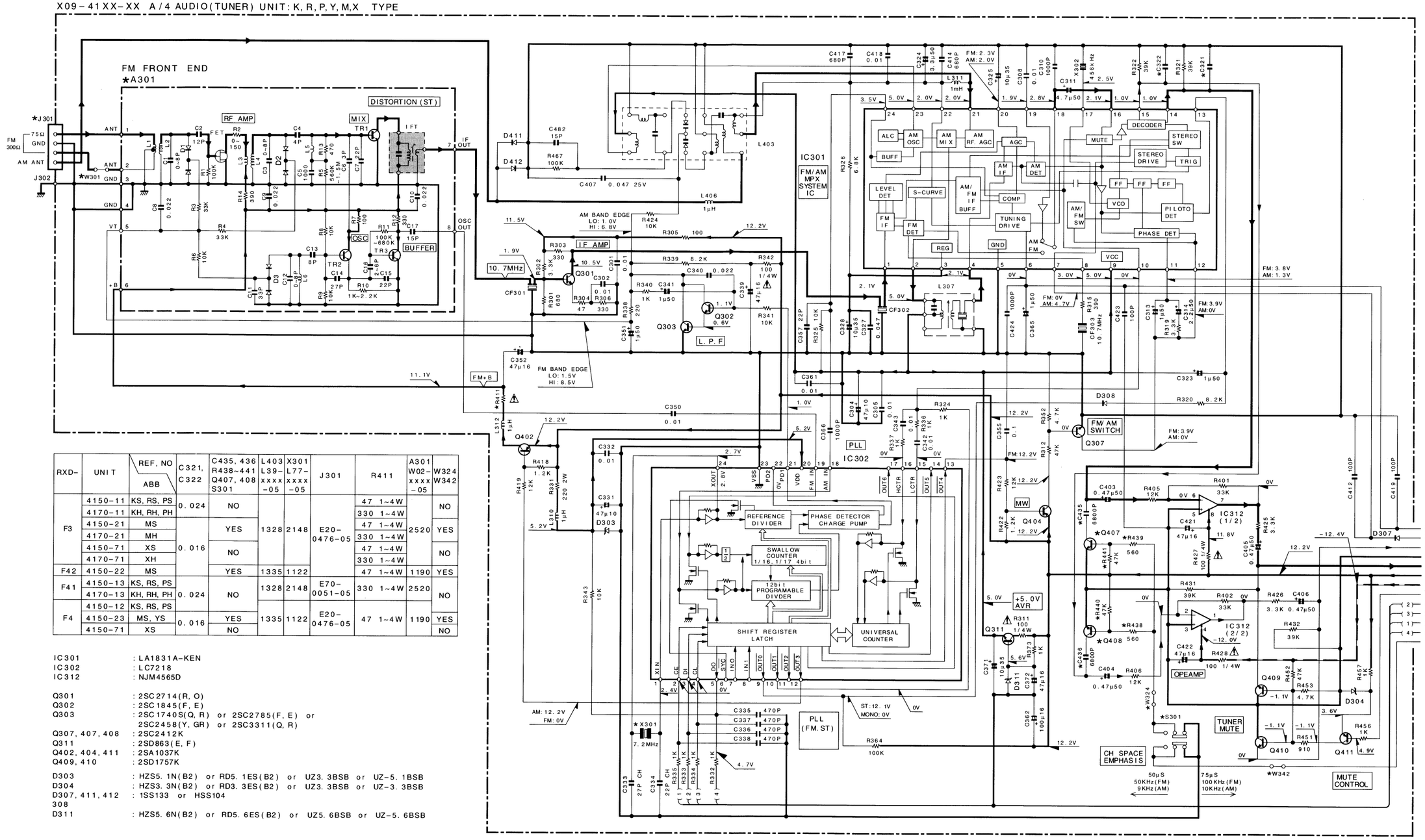

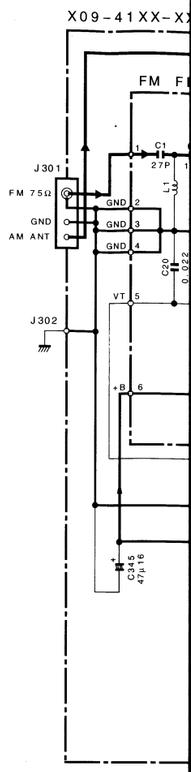

RXD-	UNIT	REF, NO / ABB	C321, C322	C435, 436 R438~441 Q407, 408 S301	L403 L39- xxxx -05	X301 L77- xxxx -05	J301	R411	A301 W02- xxxx -05	W324 W342
F3	4150-11	KS, RS, PS	0.024	NO	1328	2148	E20-0476-05	47 1~4W	2520	NO
	4170-11	KH, RH, PH						330 1~4W		
	4150-21	MS	0.016	YES				47 1~4W		YES
	4170-21	MH						330 1~4W		
	4150-71	XS		NO				47 1~4W		NO
	4170-71	XH						330 1~4W		
F42	4150-22	MS		YES	1335	1122		47 1~4W	1190	YES
F41	4150-13	KS, RS, PS	0.024	NO	1328	2148	E70-0051-05	330 1~4W	2520	NO
	4170-13	KH, RH, PH								
F4	4150-12	KS, RS, PS	0.016	YES	1335	1122	E20-0476-05	47 1~4W	1190	YES
	4150-23	MS, YS								
	4150-71	XS		NO						NO

RXD-	UNIT
F3	4162-70
	4182-70
F3/L	4160-51
	4180-51
F4	4162-70
	4162-71
F4/L	4160-51
	4160-52

IC301 IC302

Q301
Q302
Q303, 313~315
Q305

Q306~308
Q309
Q310

Q311, 312

IC301 : LA1831A-KEN
IC302 : LC7218
IC312 : NJM4565D

Q301 : 2SC2714(R, O)
Q302 : 2SC1845(F, E)
Q303 : 2SC1740S(Q, R) or 2SC2785(F, E) or 2SC2458(Y, GR) or 2SC3311(Q, R)
Q307, 407, 408 : 2SC2412K
Q311 : 2SD863(E, F)
Q402, 404, 411 : 2SA1037K
Q409, 410 : 2SD1757K

D303 : HZS5.1N(B2) or RD5.1ES(B2) or UZ3.3BSB or UZ-5.1BSB
D304 : HZS3.3N(B2) or RD3.3ES(B2) or UZ3.3BSB or UZ-3.3BSB
D307, 411, 412 308 : 1SS133 or HSS104
D311 : HZS5.6N(B2) or RD5.6ES(B2) or UZ5.6BSB or UZ-5.6BSB

CAUTION: For continued safety, replace safety critical components only with manufacturer's recommended parts (refer to parts list). ⚠ indicates safety critical components. For continued protection against risk of fire, replace only with same type and rating fuse(s). To reduce the risk of electric shock, leakage-current or resistance measurements shall be carried out (exposed parts are acceptably insulated from the supply circuit) before the appliance is returned to the customer.

(NOTE) The DC voltage is an actual reading measured with a high impedance type voltmeter as the AM/FM signal generator is specified to the conditions as shown in the list below.
The measurement value may vary depending on the measuring instruments used or on the product. the value shown in ( ) is actual reading measured in the AM mode.

MODE	CARRIER	MODULATION		ANT INPUT
		FREQUENCY	DEVIATION	
FM	98MHz	1KHz	STEREO 67.5KHz 7.5KHz(Pilot)	60dB
AM	1000(999)KHz	400Hz	MONO 30% MOD	60dB

X09-41XX-XX A/4 AUDIO (TUNER) UNIT: T, E, G, TYPE

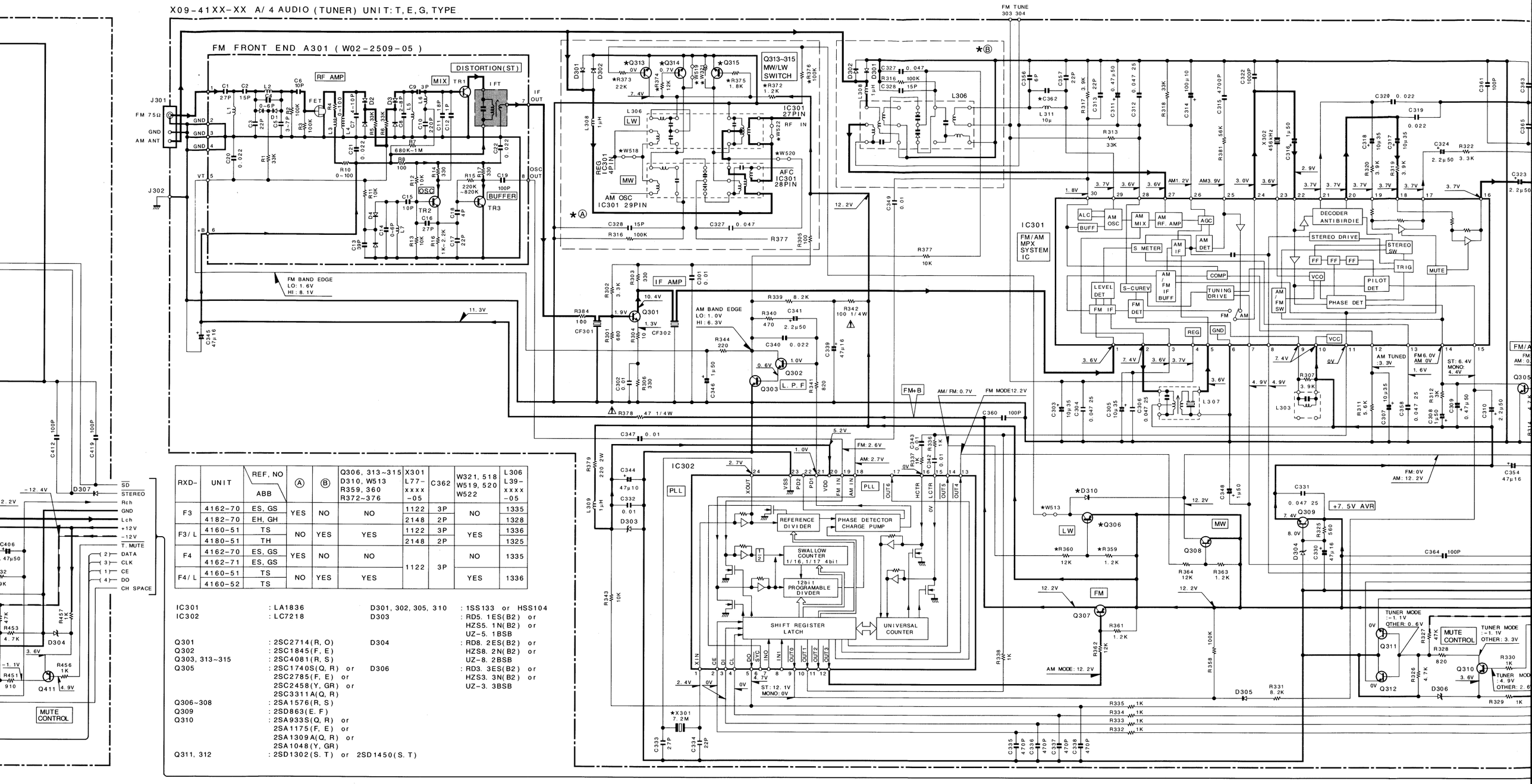

RXD-	UNIT	REF, NO / ABB	Ⓐ	Ⓑ	Q306, 313~315 D310, W513 R359, 360 R372~376	X301 L77-xxxx -05	C362	W321, 518 W519, 520 W522	L306 L39-xxxx -05
F3	4162-70	ES, GS	YES	NO	NO	1122	3P	NO	1335
	4182-70	EH, GH				2148	2P		1328
F3/L	4160-51	TS	NO	YES	YES	1122	3P	YES	1336
	4180-51	TH				2148	2P		1325
F4	4162-70	ES, GS	YES	NO	NO	1122	3P	NO	1335
	4162-71	ES, GS							
F4/L	4160-51	TS	NO	YES	YES			YES	1336
	4160-52	TS							

IC301 : LA1836
IC302 : LC7218

Q301 : 2SC2714(R, O)
Q302 : 2SC1845(F, E)
Q303, 313~315 : 2SC4081(R, S)
Q305 : 2SC1740S(Q, R) or 2SC2785(F, E) or 2SC2458(Y, GR) or 2SC3311A(Q, R)
Q306~308 : 2SA1576(R, S)
Q309 : 2SD863(E. F)
Q310 : 2SA933S(Q, R) or 2SA1175(F, E) or 2SA1309A(Q, R) or 2SA1048(Y, GR)
Q311, 312 : 2SD1302(S. T) or 2SD1450(S. T)

D301, 302, 305, 310 : 1SS133 or HSS104
D303 : RD5. 1ES(B2) or HZS5. 1N(B2) or UZ-5. 1BSB
D304 : RD8. 2ES(B2) or HZS8. 2N(B2) or UZ-8. 2BSB
D306 : RD3. 3ES(B2) or HZS3. 3N(B2) or UZ-3. 3BSB

	ANT INPUT
lot)	60dB
	60dB

2SA1534A
2SA954
2SA992
2SC1845
2SC1923
2SC2003
2SC2878

2SC3246
2SC3940A
2SD1302
2SD863

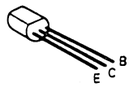

2SB1565

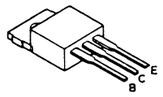

2SB1565
2SB1624
2SD2493

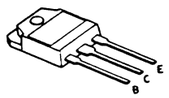

2SA1175
2SC2785

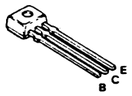

DTA124ES
DTC124ES
UN4112
2SA1048
2SA933S
2SC1740S
2SC2458

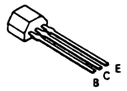

DTC124EU
2SA1037K
2SA1576
2SC2412K
2SC2714
2SC4081
2SD1757K

2SC4137

2SB1370
2SD2061

Y39-2130-11

NER) UNIT: T, E, G, TYPE

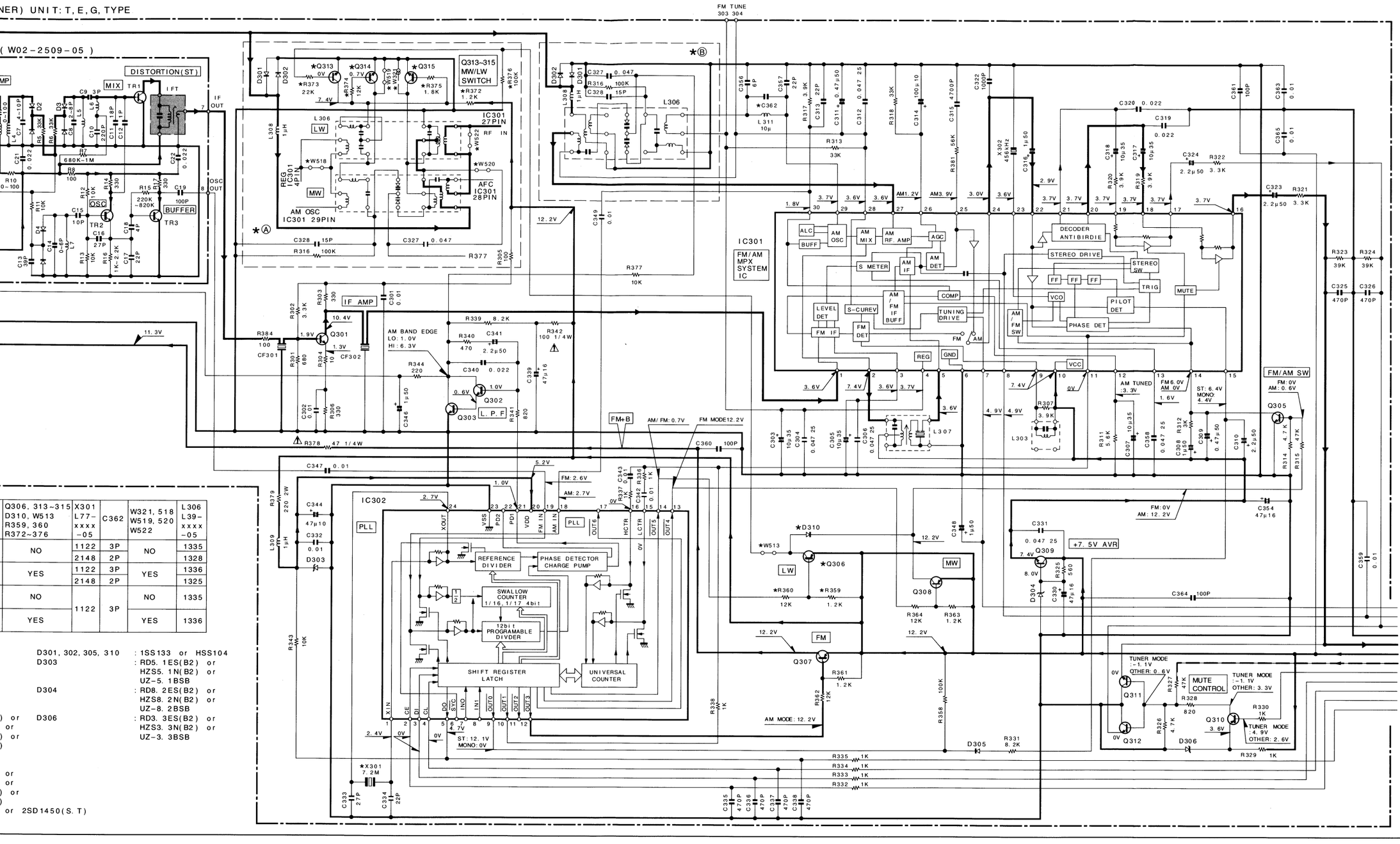

Q306, 313-315 D310, W513 R359, 360 R372~376	X301 L77- xxxx -05	C362	W321, 518 W519, 520 W522	L306 L39- xxxx -05
NO	1122	3P	NO	1335
	2148	2P		1328
YES	1122	3P	YES	1336
	2148	2P		1325
NO	1122	3P	NO	1335
YES			YES	1336

D301, 302, 305, 310 : 1SS133 or HSS104
D303 : RD5. 1ES(B2) or HZS5. 1N(B2) or UZ-5. 1BSB
D304 : RD8. 2ES(B2) or HZS8. 2N(B2) or UZ-8. 2BSB
D306 : RD3. 3ES(B2) or HZS3. 3N(B2) or UZ-3. 3BSB

) or
or
) or
)

or
or
) or
)
or 2SD1450(S. T)

RXD-F3/F4/F41/F42 (1/6)

2SC3246
2SC3940A
2SD1302
2SD863

2SB1565

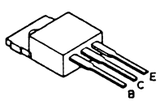

2SB1565
2SB1624
2SD2493

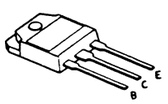

2SA1175
2SC2785

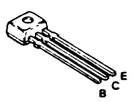

DTA124ES
DTC124ES
UN4112
2SA1048
2SA933S
2SC1740S
2SC2458

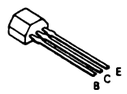

DTC124EU
2SA1037K
2SA1576
2SC2412K
2SC2714
2SC4081
2SD1757K

2SC4137

2SB1370
2SD2061

Y39-2130-11

RXD-F3/F4/F41/F42

KENWOOD

MODEL NAME	X28-27	ABB
F3	40-00	KW, RW, PW, MW, XW
		KS, RS, PS, MS, XS
F4, F41, F42		YW, MW, XW
		YS, MS, XS
F3	42-71	TW, EW, GW
F4, F41, F42		TS, ES, GS
F3	50-00	KH, RH, PH, MH, XH
	52-71	TH, EH, GH

IC1, 2 : TA 8125S
IC3 : HA 12182F
IC4 : μPC1297CA
IC5 : BA 10393
IC6, 7 : BU 4094BC

D1, 2, 4, 5, 6, 8 : 1SS133 or HSS104
D7 : UZ-2.7BSB or RD2.7ES(B2) or HZS2.7 (B2)

Q1, 2, 51, 61 : UN4212 or DTC124ES
Q3, 4 : 2SD1302(S, T) or 2SD1450 (S, T)
Q52, 56, 57, 59 : 2SC2785(F, E) or 2SC3311A(Q, R) or 2SC1740S(Q, R) or 2SC2458(Y, GR)
Q53 : UN4112 or DTA124ES
Q54, 55 : 2SC1845(F, E)
Q58 : 2SC3940A(R, S)
Q60 : 2SA992(F, E)
Q63~65 : 2SC3246

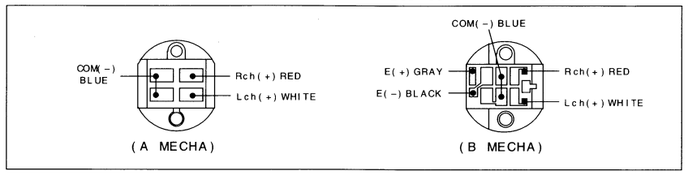

ROTARY HEAD

DECK MECHA (RVS type) D40-1427-08

A(PB) MECHA

B(RP) MECHA

X28-27xx-xx RECORD/PLAY BACK UNIT

CN1 CN2 CN3 CN4

IC1 (1/2) IC1 (2/2) IC2 (2/2) IC2 (1/2) IC4

A PB AMP B PB AMP

RCH LCH

REC/PLAY SELECT

BIAS OSC BIAS OSC SW

BEAT CANCEL SW BEAT CANCEL CONTROL

A DECK SOL/CONTROL B DECK SOL/CONTROL

MOTOR CONTROL

PRE DRIVER

THARMAL DETECTING PROTECTION CIRCUIT

STABILIZING POWER SOURCE

IC4 HX PRO

REC MODE VOLTAGE
NORMAL : 7.3V
CrO2 : 10.9V

PLAY/STOP : 4.2V
REC : 0V

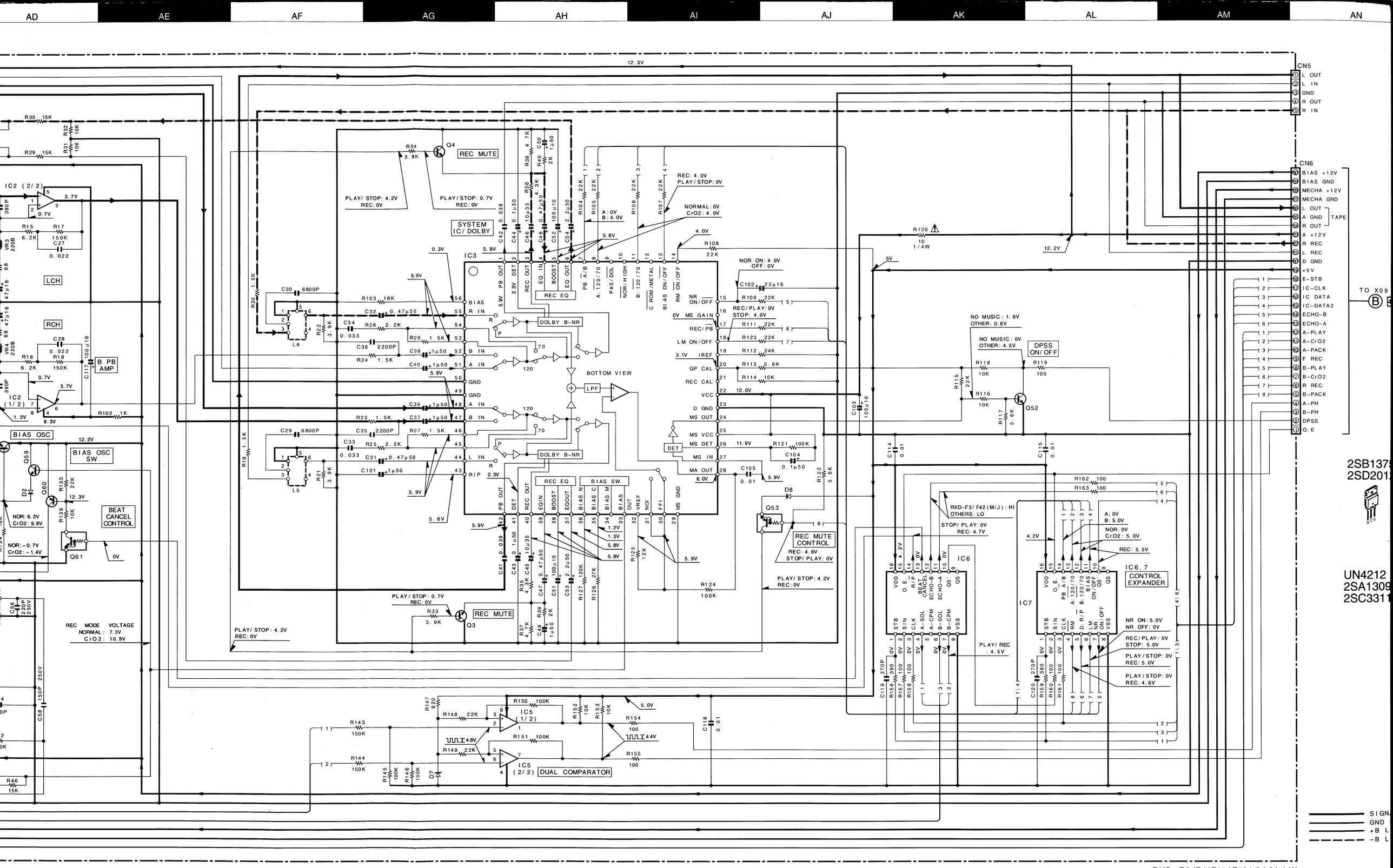

RXD-F3/F4/F41/F42(2/6)(K)

Y39-2130-11

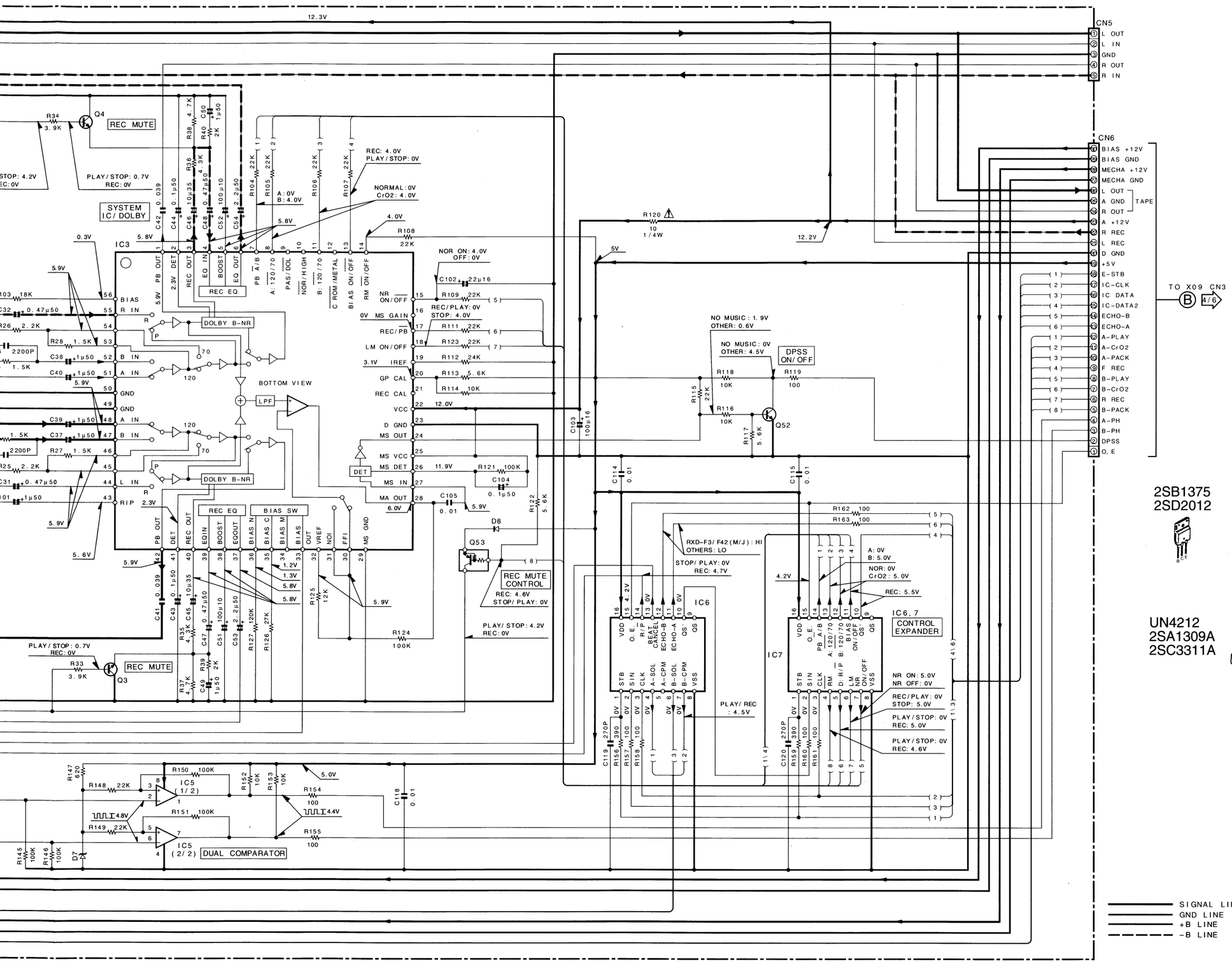

RXD-F3/F4/F41/F42 (2/6) (K)

CAUTION: For continued safety, replace safety critical components only with manufacturer's recommended parts (refer to parts list). ⚠ indicates safety critical components. For continued protection against risk of fire, replace only with same type and rating fuse(s). To reduce the risk of electric shock, leakage-current or resistance measurements shall be carried out (exposed parts are acceptably insulated from the supply circuit) before the appliance is returned to the customer.

DOLBY and the double-D symbol are trademarks of Dolby Laboratories Licensing Corporation. Noise reduction circuit made under license from Dolby Laboratories Licensing Corporation.

DC voltages are as measured with a high impedance voltmeter. Values may vary slightly due to variations between individual instruments or/and units.

Les tensions c.c doivent être mesurées avec un voltmétre á haute impédance Les valeurs peuvent différer légérement du fait des variations inhérentes aux appareils et aux instruments de mesure individuels

Die angegebenen Gleichspannungswerte wurden mit einem hochohmigen Spannungsmesser gemessen. Dabei schwanken die Meßwerte aufgrund von Unterschieden zwischen einzelnen Instrumenten oder Geräten u. U geringfügig.

2SB1375
2SD2012

2SD1893

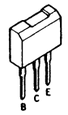

NJM2100D

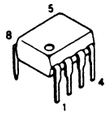

NJM4565D
NJM4565D-D

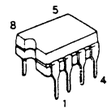

UN4212
2SA1309A
2SC3311A

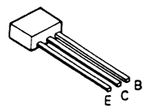

XRU4052BC

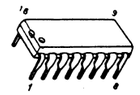

LA2785

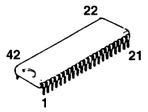

TDA7315

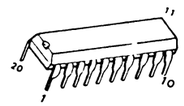

UPC7805AHF

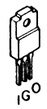

SIGNAL LINE
GND LINE
+B LINE
-B LINE

Y39-2130-11

RXD-F3/F4/F41/F42

KENWOOD

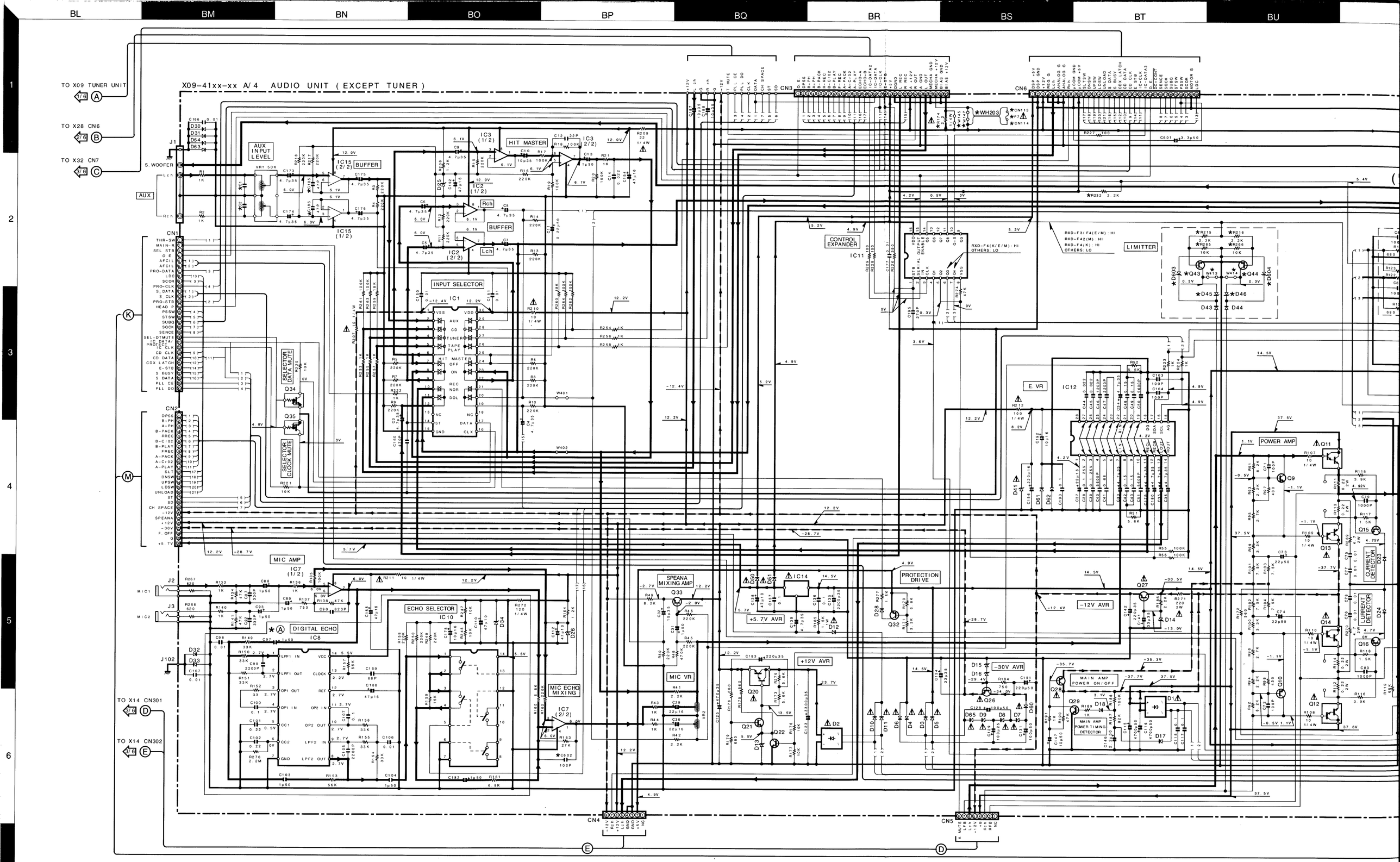

CAUTION: For continued safety, replace safety critical components only with manufacturer's recommended parts (refer to parts list). ⚠ indicates safety critical components. For continued protection against risk of fire, replace only with same type and rating fuse(s). To reduce the risk of electric shock, leakage-current or resistance measurements shall be carried out (exposed parts are acceptably insulated from the supply circuit) before the appliance is returned to the customer.

DOLBY and the double-D symbol are trademarks of Dolby Laboratories Licensing Corporation. Noise reduction circuit made under license from Dolby Laboratories Licensing Corporation.

DC voltages are as measured with a high impedance voltmeter. Values may vary slightly due to variations between individual instruments or/and units.

Les tensions c.c doivent être mesurées
impédance Les valeurs peuvent diffé
variations inhérentes aux appareils et
individuels

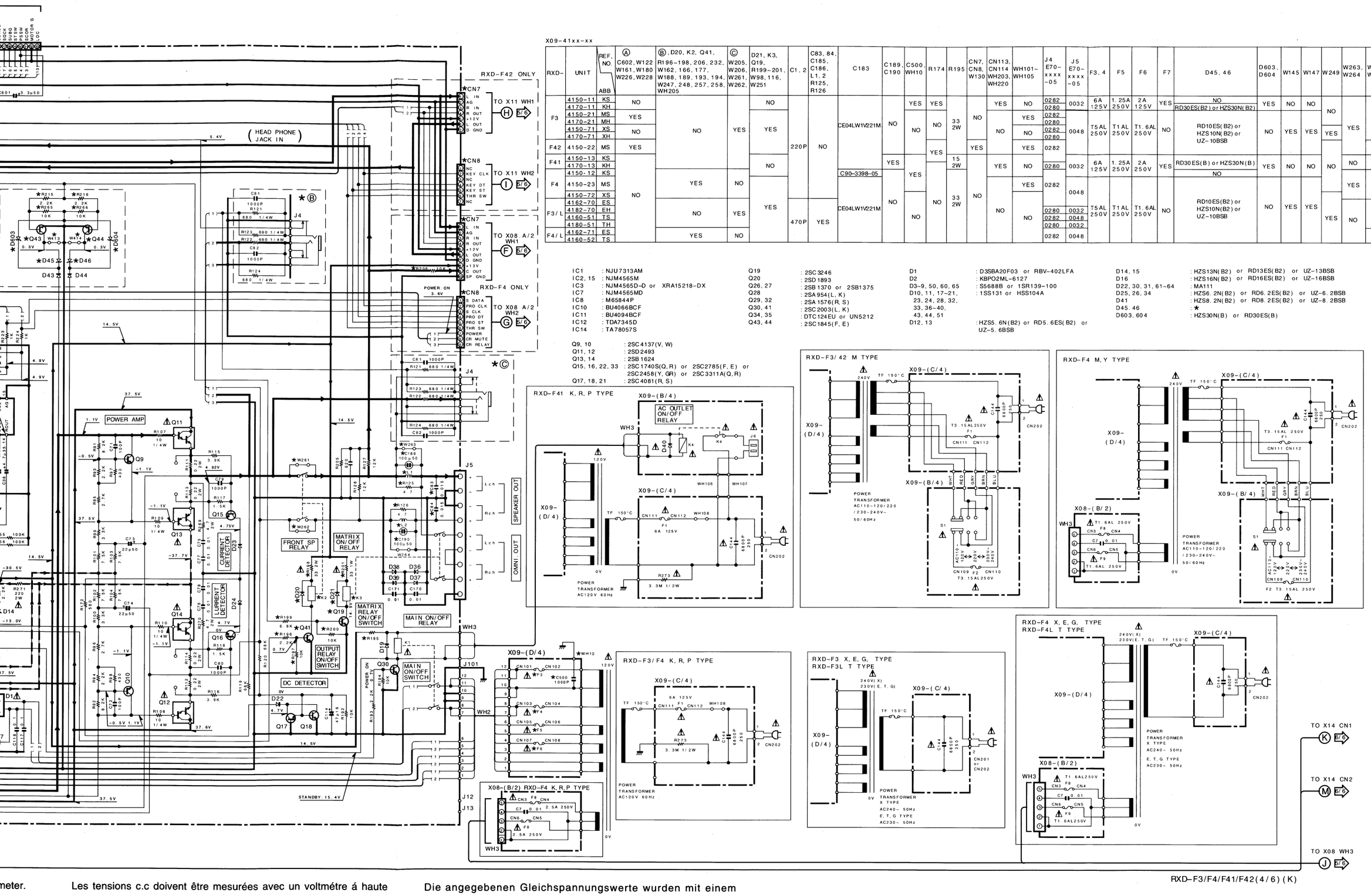

RXD-F3/F4/F41/F42(4/6)(K)

X09-41xx-xx

RXD-	UNIT	REF. NO. / ABB	Ⓐ	Ⓑ, D20, K2, Q41,	Ⓒ	D21, K3,	C1, 2	C83, 84,	C183	C189,	C500,	R174	R195	CN7,	CN113,	WH101~	J4	J5	F3, 4	F5	F6	F7	D45, 46	D603,	W145	W147	W249	W263,	W401,
F3	4150-11	KS	NO	NO	YES	NO	220P	NO	CE04LW1V221M	NO	YES	YES	33 2W	NO	YES	NO	0282	0032	6A 125V	1.25A 250V	2A 125V	YES	NO	YES	NO	NO	YES	YES	YES
	4170-11	KH															0280						RD30ES(B2) or HZS30N(B2)						
	4150-21	MS	YES			YES					NO	NO				YES	0282	0048	T5AL 250V	T1AL 250V	T1.6AL 250V	NO	RD10ES(B2) or HZS10N(B2) or UZ-10BSB	NO	YES	YES	YES		
	4170-21	MH															0280												
	4150-71	XS	NO													NO	0282												
	4170-71	XH															0280												
F42	4150-22	MS	YES									YES		YES		YES	0282												NO
F41	4150-13	KS				NO				YES	YES		15 2W		YES	NO	0280	0032	6A 125V	1.25A 250V	2A 250V	YES	RD30ES(B) or HZS30N(B)	YES	NO	NO	NO	NO	YES
	4170-13	KH																											
	4150-12	KS		YES	NO				C90-3398-05														NO						
F4	4150-23	MS				YES										YES	0282	0048	T5AL 250V	T1AL 250V	T1.6AL 250V	NO	RD10ES(B2) or HZS10N(B2) or UZ-10BSB	NO	YES	YES	YES	YES	NO
	4150-72	XS																											
F3/L	4162-70	ES	NO				470P	YES	CE04LW1V221M	NO	NO	NO	33 2W	NO	NO	NO	0280	0032										NO	YES
	4182-70	EH		NO	YES												0282	0048											
	4160-51	TS															0280	0032											
	4180-51	TH																											
F4/L	4162-71	ES		YES	NO												0282	0048											NO
	4160-52	TS																											

IC1	: NJU7313AM
IC2, 15	: NJM4565M
IC3	: NJM4565D-D or XRA15218-DX
IC7	: NJM4565MD
IC8	: M65844P
IC10	: BU4066BCF
IC11	: BU4094BCF
IC12	: TDA7345D
IC14	: TA78057S

Q9, 10	: 2SC4137(V, W)
Q11, 12	: 2SD2493
Q13, 14	: 2SB1624
Q15, 16, 22, 33	: 2SC1740S(Q, R) or 2SC2785(F, E) or 2SC2458(Y, GR) or 2SC3311A(Q, R)
Q17, 18, 21	: 2SC4081(R, S)
Q19	: 2SC3246
Q20	: 2SD1893
Q26, 27	: 2SB1370 or 2SB1375
Q28	: 2SA954(L, K)
Q29, 32	: 2SA1576(R, S)
Q30, 41	: 2SC2003(L, K)
Q34, 35	: DTC124EU or UN5212
Q43, 44	: 2SC1845(F, E)

D1	: D3SBA20F03 or RBV-402LFA
D2	: KBP02ML-6127
D3~9, 50, 60, 65	: S5688B or 1SR139-100
D10, 11, 17~21, 23, 24, 28, 32, 33, 36~40, 43, 44, 51	: 1SS131 or HSS104A
D12, 13	: HZS5.6N(B2) or RD5.6ES(B2) or UZ-5.6BSB
D14, 15	: HZS13N(B2) or RD13ES(B2) or UZ-13BSB
D16	: HZS16N(B2) or RD16ES(B2) or UZ-16BSB
D22, 30, 31, 61~64	: MA111
D25, 26, 34	: HZS6.2N(B2) or RD6.2ES(B2) or UZ-6.2BSB
D41	: HZS8.2N(B2) or RD8.2ES(B2) or UZ-8.2BSB
D45, 46	: ★
D603, 604	: HZS30N(B) or RD30ES(B)

meter.
vidual

Les tensions c.c doivent être mesurées avec un voltmétre á haute impédance Les valeurs peuvent différer légérement du fait des variations inhérentes aux appareils et aux instruments de mesure individuels

Die angegebenen Gleichspannungswerte wurden mit einem hochohmigen Spannungsmesser gemessen. Dabei schwanken die Meßwerte aufgrund von Unterschieden zwischen einzelnen Instrumenten oder Geräten u. U geringfügig.

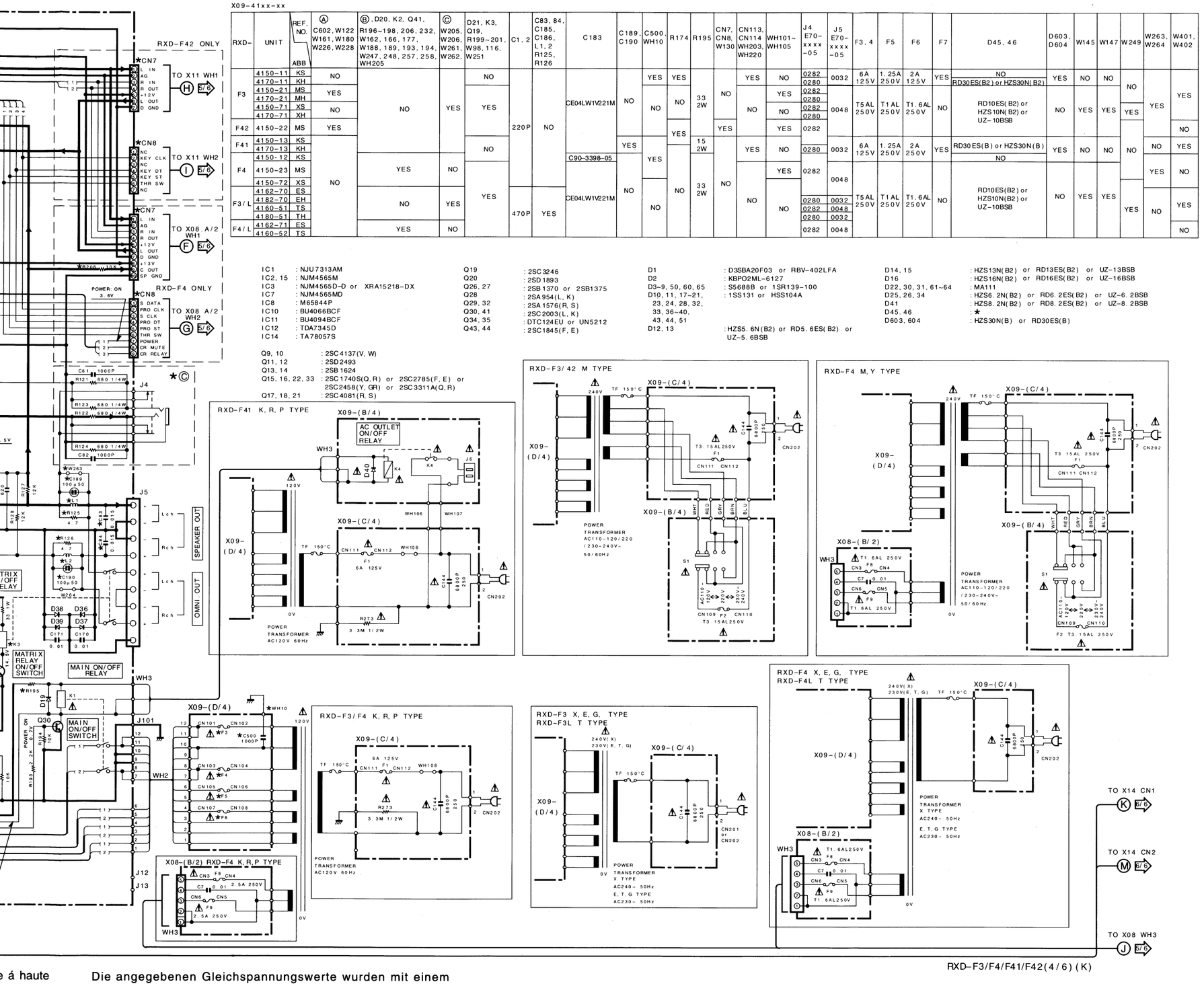

X09-41xx-xx

RXD-	UNIT	REF. NO. ABB	Ⓐ C602, W122 W161, W180 W226, W228	Ⓑ, D20, K2, Q41, R196~198, 206, 232, W162, 166, 177, W188, 189, 193, 194, W247, 248, 257, 258, WH205	Ⓒ W205, W206, W261, W262,	D21, K3, Q19, R199~201, W98, 116, W251	C1, 2	C83, 84, C185, C186, L1, 2 R125, R126	C183	C189, C190	C500, WH10	R174	R195	CN7, CN8, W130	CN113, CN114 WH203, WH220	WH101~ WH105	J4 E70-xxxx-05	J5 E70-xxxx-05	F3, 4	F5	F6	F7	D45, 46	D603, D604	W145	W147	W249	W263, W264	W401, W402
F3	4150-11	KS	NO	NO	YES	NO	220P	NO	CE04LW1V221M	NO	YES	YES	33 2W	NO	YES	NO	0282	0032	6A 125V	1.25A 250V	2A 125V	YES	NO	YES	NO	NO	NO	YES	YES
	4170-11	KH															0280						RD30ES(B2) or HZS30N(B2)						
	4150-21	MS	YES			YES					NO	NO			NO	YES	0282	0048	T5AL 250V	T1AL 250V	T1.6AL 250V	NO	RD10ES(B2) or HZS10N(B2) or UZ-10BSB	NO	YES	YES	YES		
	4170-21	MH															0280												
	4150-71	XS	NO													NO	0282												
	4170-71	XH															0280												
F42	4150-22	MS	YES									YES		YES		YES	0282												NO
F41	4150-13	KS	NO			NO				YES	YES		15 2W		YES	NO	0280	0032	6A 125V	1.25A 250V	2A 250V	YES	RD30ES(B) or HZS30N(B)	YES	NO	NO	NO	NO	YES
	4170-13	KH																					NO						
	4150-12	KS							C90-3398-05																				
F4	4150-23	MS		YES	NO	YES				NO			33 2W	NO		YES	0282	0048	T5AL 250V	T1AL 250V	T1.6AL 250V	NO	RD10ES(B2) or HZS10N(B2) or UZ-10BSB	NO	YES	YES	YES	YES	NO
	4150-72	XS																											
F3/L	4162-70	ES		NO	YES		470P	YES	CE04LW1V221M		NO				NO	NO	0280	0032										NO	YES
	4182-70	EH															0282	0048											
	4160-51	TS															0280	0032											
	4180-51	TH															0282	0048											
F4/L	4162-71	ES		YES	NO																								NO
	4160-52	TS																											

IC1 : NJU7313AM
IC2, 15 : NJM4565M
IC3 : NJM4565D-D or XRA15218-DX
IC7 : NJM4565MD
IC8 : M65844P
IC10 : BU4066BCF
IC11 : BU4094BCF
IC12 : TDA7345D
IC14 : TA78057S

Q9, 10 : 2SC4137(V, W)
Q11, 12 : 2SD2493
Q13, 14 : 2SB1624
Q15, 16, 22, 33 : 2SC1740S(Q, R) or 2SC2785(F, E) or 2SC2458(Y, GR) or 2SC3311A(Q, R)
Q17, 18, 21 : 2SC4081(R, S)

Q19 : 2SC3246
Q20 : 2SD1893
Q26, 27 : 2SB1370 or 2SB1375
Q28 : 2SA954(L, K)
Q29, 32 : 2SA1576(R, S)
Q30, 41 : 2SC2003(L, K)
Q34, 35 : DTC124EU or UN5212
Q43, 44 : 2SC1845(F, E)

D1 : D3SBA20F03 or RBV-402LFA
D2 : KBPO2ML-6127
D3~9, 50, 60, 65 : S5688B or 1SR139-100
D10, 11, 17~21, 23, 24, 28, 32, 33, 36~40, 43, 44, 51 : 1SS131 or HSS104A
D12, 13 : HZS5.6N(B2) or RD5.6ES(B2) or UZ-5.6BSB

D14, 15 : HZS13N(B2) or RD13ES(B2) or UZ-13BSB
D16 : HZS16N(B2) or RD16ES(B2) or UZ-16BSB
D22, 30, 31, 61~64 : MA111
D25, 26, 34 : HZS6.2N(B2) or RD6.2ES(B2) or UZ-6.2BSB
D41 : HZS8.2N(B2) or RD8.2ES(B2) or UZ-8.2BSB
D45, 46 : ★
D603, 604 : HZS30N(B) or RD30ES(B)

RXD-F3/F4/F41/F42(4/6)(K)

UPC1297CA

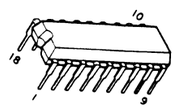

NJM4565M
NJM4565MD

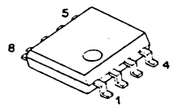

NJU7313AM

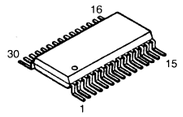

M5237L

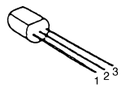

TDA2050V

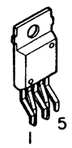

LA1836

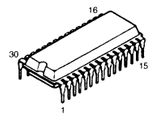

NJM4565L-D

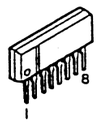

CXA1782BQ

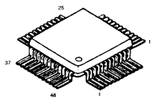

M65844P

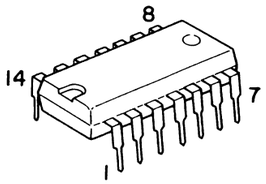

UN5212

TDA2040V

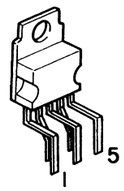

TA8125S
TA8409S

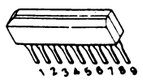

Die angegebenen Gleichspannungswerte wurden mit einem hochohmigen Spannungsmesser gemessen. Dabei schwanken die Meßwerte aufgrund von Unterschieden zwischen einzelnen Instrumenten oder Geräten u. U geringfügig.

Y39-2130-11

RXD-F3/F4/F41/F42

KENWOOD

UNIT NO.	MODEL NAME	ABB
X32-2940-10	F3	KW, RW, PW, MW, XW, TW, EW, GW
	F4	YW, MW, XW, TW, EW, GW
X32-2960-10	F3	KW, RW, PW, YW, MW, XW, TW, EW, GW

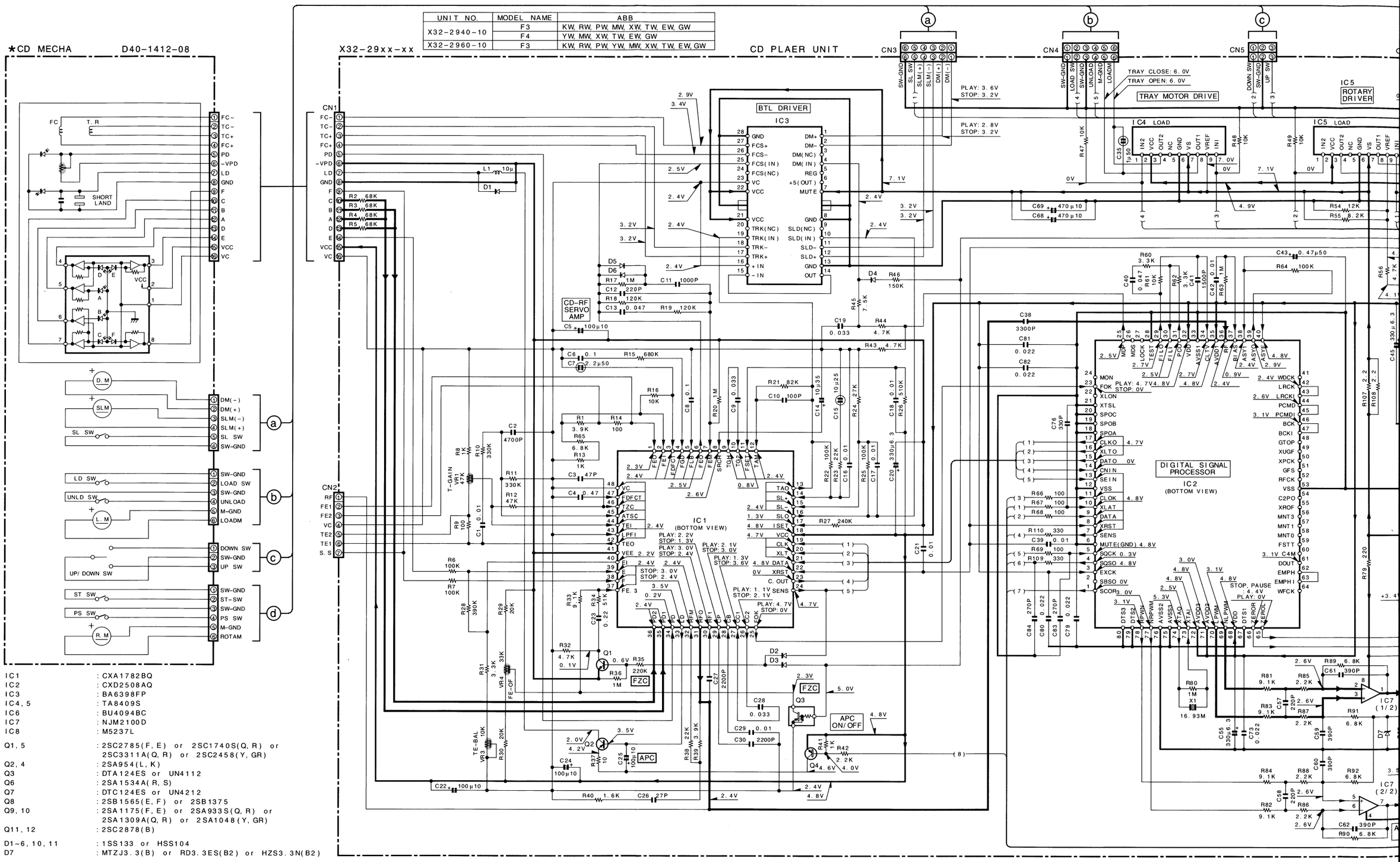

IC1	: CXA1782BQ
IC2	: CXD2508AQ
IC3	: BA6398FP
IC4, 5	: TA8409S
IC6	: BU4094BC
IC7	: NJM2100D
IC8	: M5237L
Q1, 5	: 2SC2785(F, E) or 2SC1740S(Q, R) or 2SC3311A(Q, R) or 2SC2458(Y, GR)
Q2, 4	: 2SA954(L, K)
Q3	: DTA124ES or UN4112
Q6	: 2SA1534A(R, S)
Q7	: DTC124ES or UN4212
Q8	: 2SB1565(E, F) or 2SB1375
Q9, 10	: 2SA1175(F, E) or 2SA933S(Q, R) or 2SA1309A(Q, R) or 2SA1048(Y, GR)
Q11, 12	: 2SC2878(B)
D1~6, 10, 11	: 1SS133 or HSS104
D7	: MTZJ3.3(B) or RD3.3ES(B2) or HZS3.3N(B2)

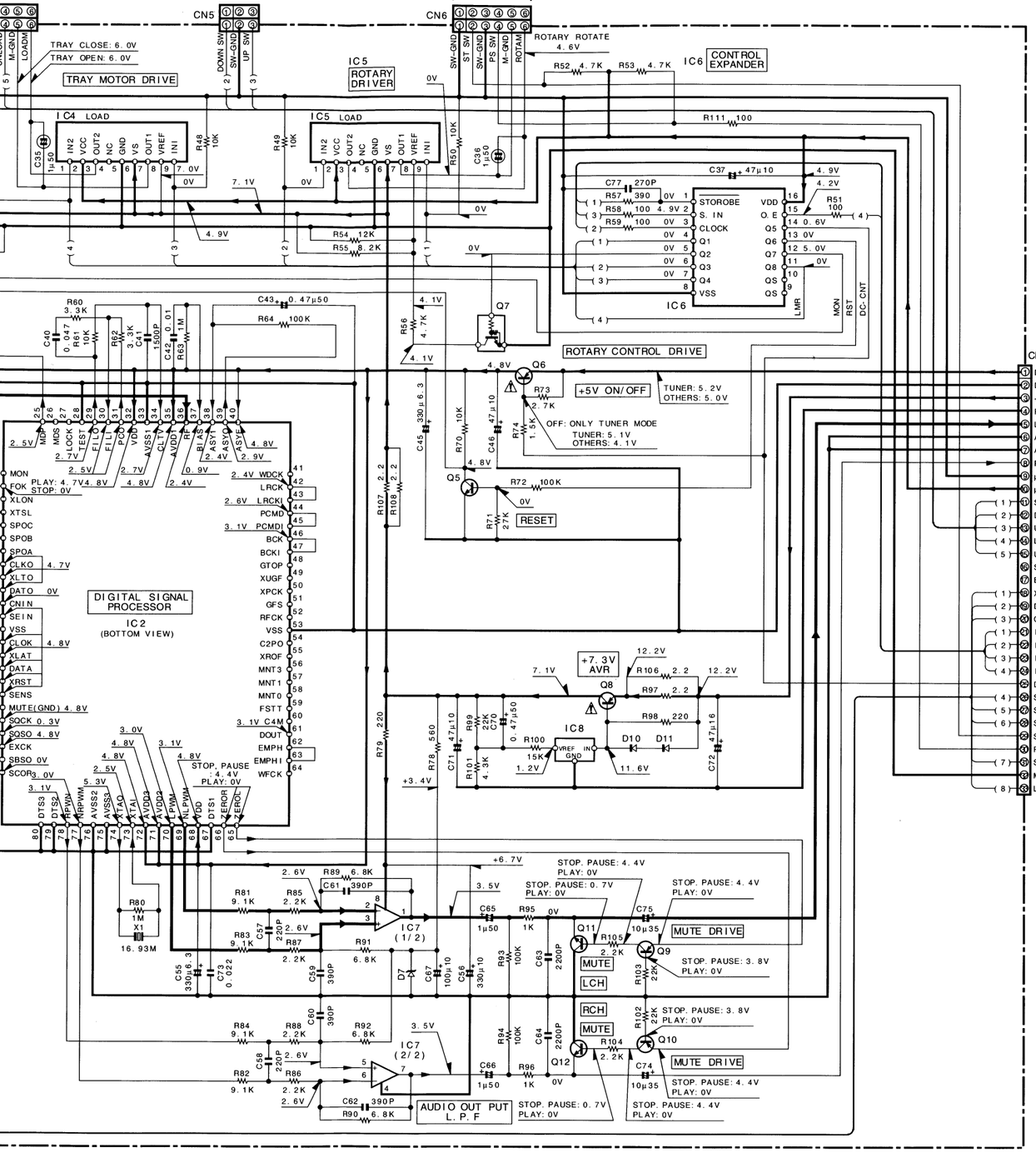

X14 C/3

MODEL NAME	X14-401 S, W MADE	X14-403 H MADE	ABB	R337, R338	R303~314, C301~306, Q301, 302	C313, ~316	C317, C318	C321, C322	W401, W402
F3	0-11	0-11	K, R, P	91	YES	NO	100P	1000P	NO
	0-21	0-21	M	100			68P	680P	
	0-51	0-51	T			YES	220P	1500P	
	0-71	2-71	X, E, G						
F42	0-23	NO	M	100	YES	NO	68P	680P	NO
F4	0-12	NO	K, R, P	91	YES	NO	100P	1000P	NO
	0-22	NO	Y, M	100			68P	680P	
	0-52	NO	T			YES	220P	1500P	
	2-72	NO	E, G, X						
F41	0-13	0-13	K, R, P	91	NO	NO	100P	1000P	YES

X14 C/3

IC301 : NJM4565D-D

D301 : RD3.9ES(B2) or HZS3.9N(B2) or UZ-3.9BSB(F4, F42 ONLY)

Q301, 302, 307~310 : 2SC1845(F, E)

Q303~306 : 2SC2878(B)

Q311, 312 : 2SA992(F, E)

Q313 : 2SA933S(Q, R) or 2SA1175(F, E)

Q313 : 2SA1048(Y, GR) or 2SA1309A(Q, R)

X14 C/3 DISPLAY UNIT (N.B.CIRCUIT)

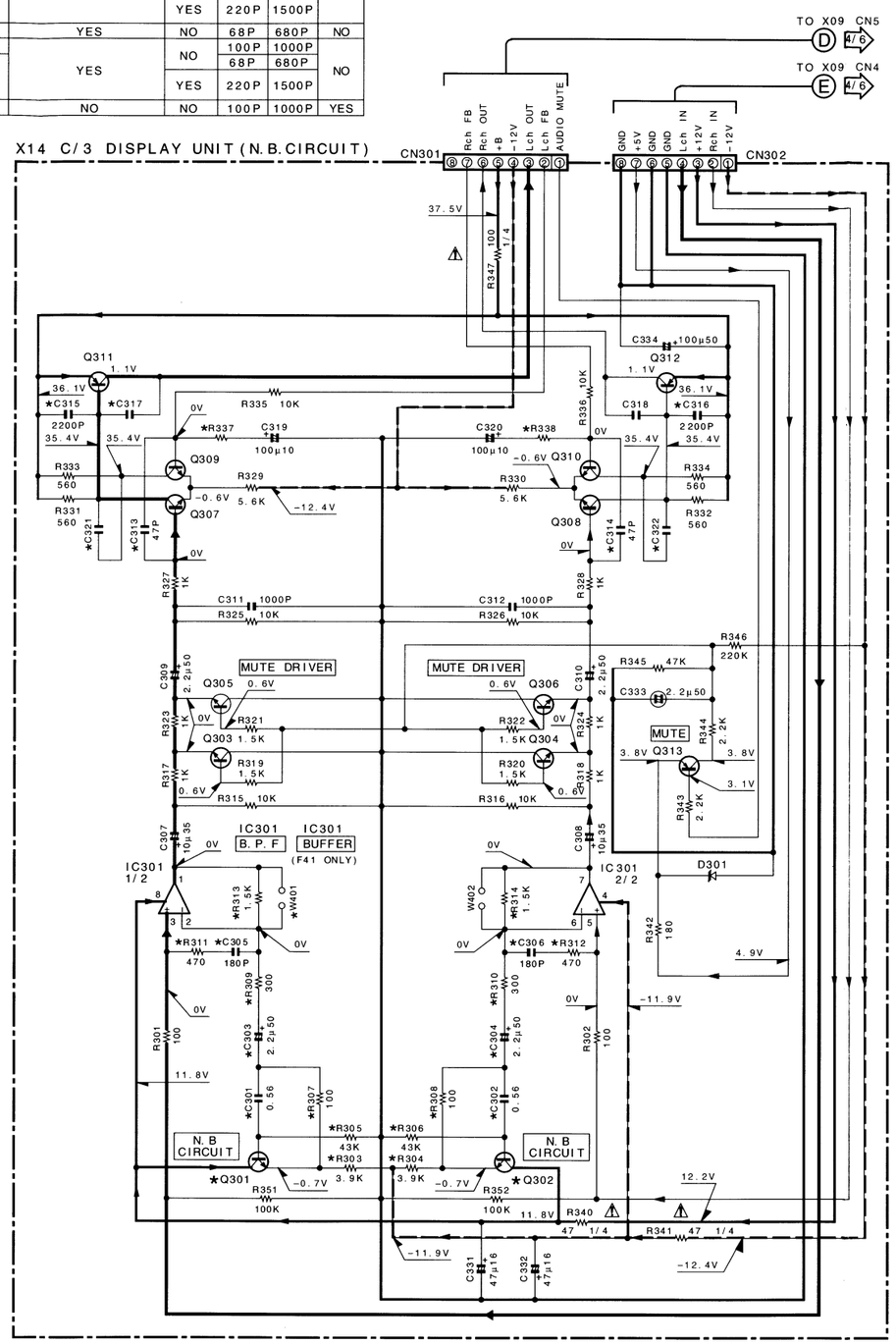

X14 C/3

MODEL NAME	X14-401 S, W MADE	X14-403 H MADE	ABB	R337, R338	R303~314, C301~306, Q301, 302	C313, ~316	C317, C318	C321, C322	W401, W402
F3	0-11	0-11	K, R, P	91	YES	NO	100P	1000P	NO
	0-21	0-21	M	100			68P	680P	
	0-51	0-51	T			YES	220P	1500P	
	0-71	2-71	X, E, G						
F42	0-23	NO	M	100	YES	NO	68P	680P	NO
F4	0-12	NO	K, R, P	91	YES	NO	100P	1000P	NO
	0-22	NO	Y, M	100			68P	680P	
	0-52	NO	T			YES	220P	1500P	
	2-72	NO	E, G, X						
F41	0-13	0-13	K, R, P	91	NO	NO	100P	1000P	YES

X14 C/3

IC301 : NJM4565D-D

D301 : RD3.9ES(B2) or HZS3.9N(B2) or UZ-3.9BSB(F4, F42 ONLY)

Q301, 302, 307~310 : 2SC1845(F, E)

Q303~306 : 2SC2878(B)

Q311, 312 : 2SA992(F, E)

Q313 : 2SA933S(Q, R) or 2SA1175(F, E)

Q313 : 2SA1048(Y, GR) or 2SA1309A(Q, R)

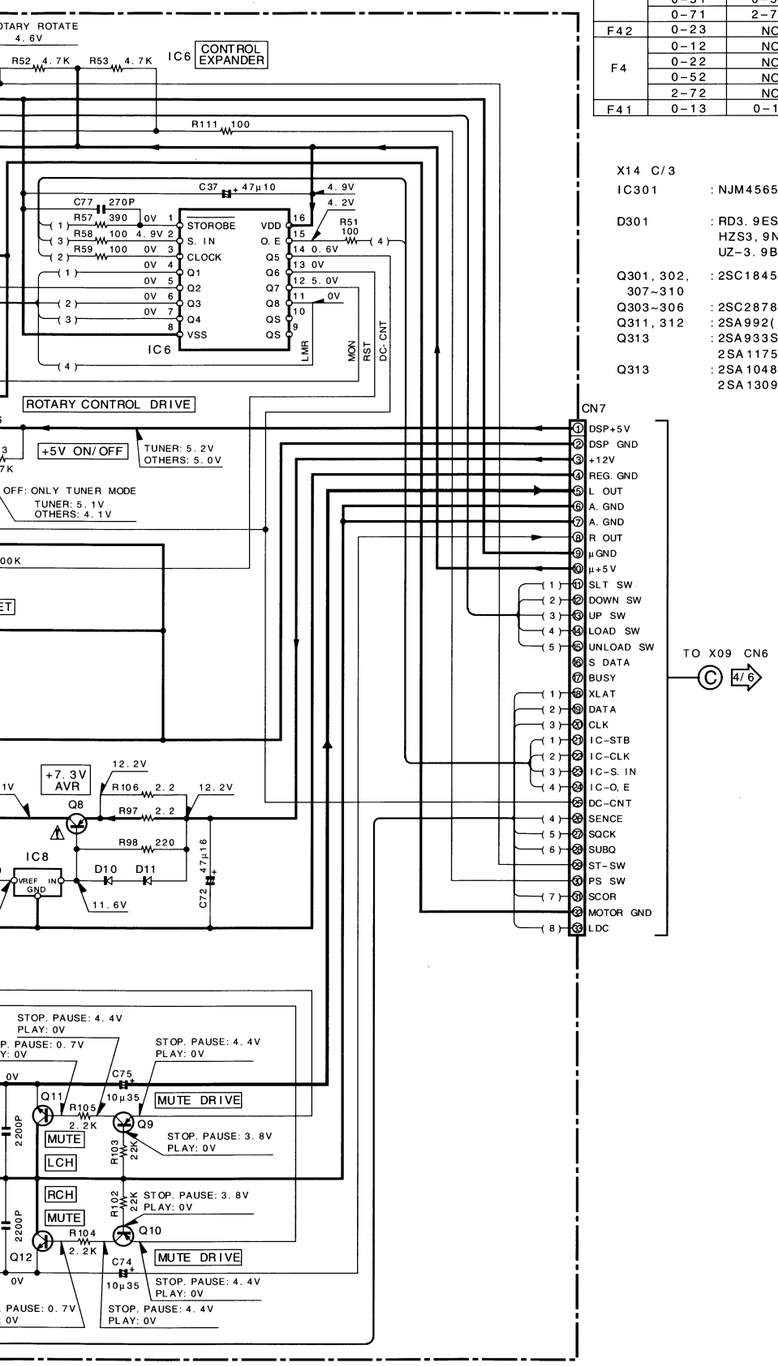

X14 C/3 DISPLAY UNIT (N.B.CIRCUIT)

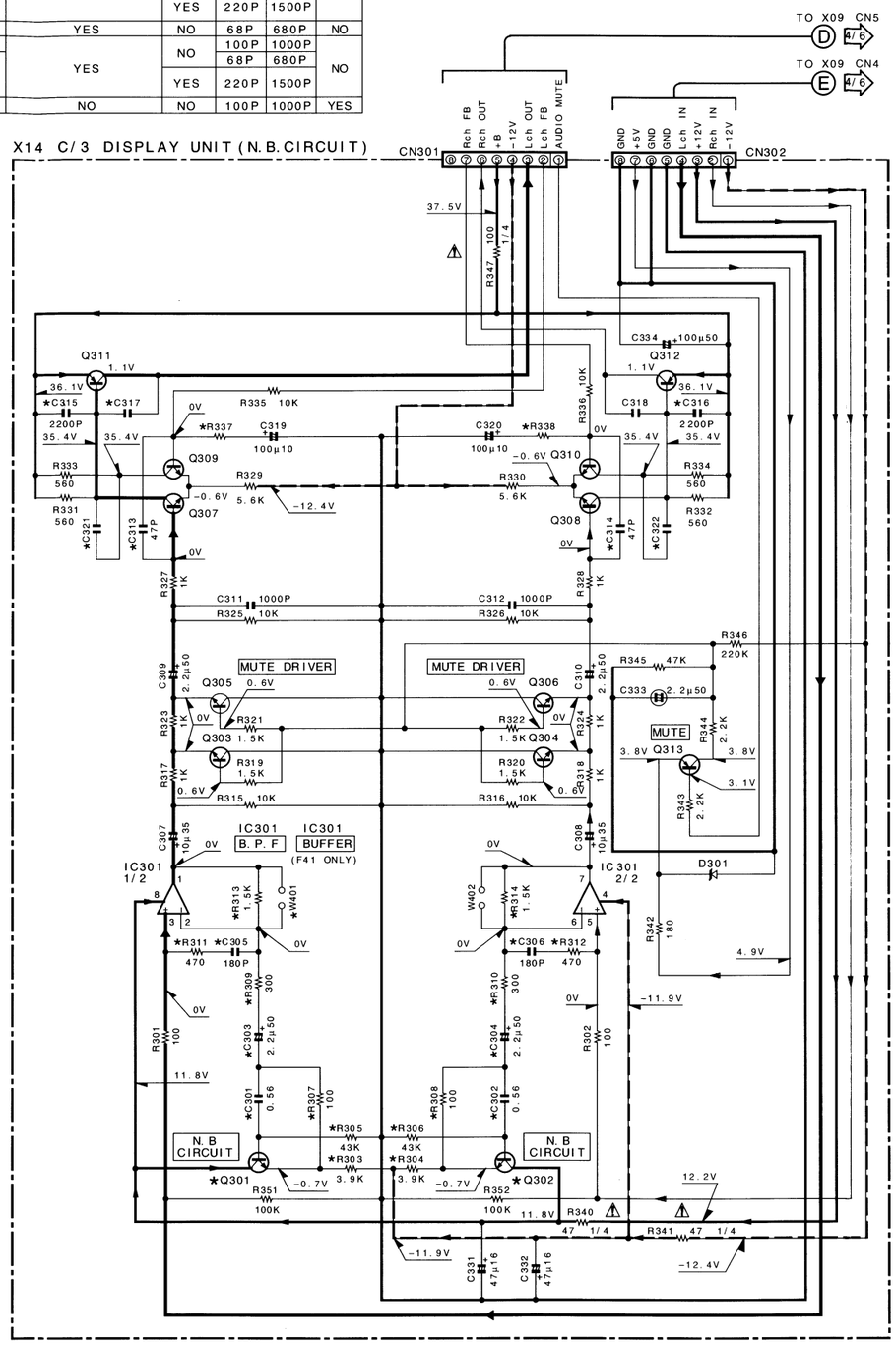

RXD-F3/F4/F41/F42 (3/6)(K)

CAUTION: For continued safety, replace safety critical components only with manufacturer's recommended parts (refer to parts list). ⚠ indicates safety critical components. For continued protection against risk of fire, replace only with same type and rating fuse(s). To reduce the risk of electric shock, leakage-current or resistance measurements shall be carried out (exposed parts are acceptably insulated from the supply circuit) before the appliance is returned to the customer.

DOLBY and the double-D symbol are trademarks of Dolby Laboratories Licensing Corporation. Noise reduction circuit made under license from Dolby Laboratories Licensing Corporation.

DC voltages are as measured with a high impedance voltmeter. Values may vary slightly due to variations between individual instruments or/and units.

Les tensions c.c doivent être mesurées avec un voltmétre á haute impédance Les valeurs peuvent différer légérement du fait des variations inhérentes aux appareils et aux instruments de mesure individuels

Die angegebenen Gleichspannungswerte wurden mit einem hochohmigen Spannungsmesser gemessen. Dabei schwanken die Meßwerte aufgrund von Unterschieden zwischen einzelnen Instrumenten oder Geräten u. U geringfügig.

BU4066BCF

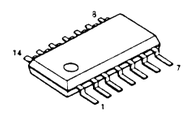

M65840SP

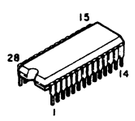

TA7805S

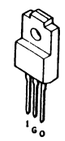

NJU3718G

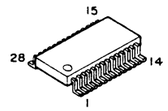

Y39-2130-11

RXD-F3/F4/F41/F42

KENWOOD

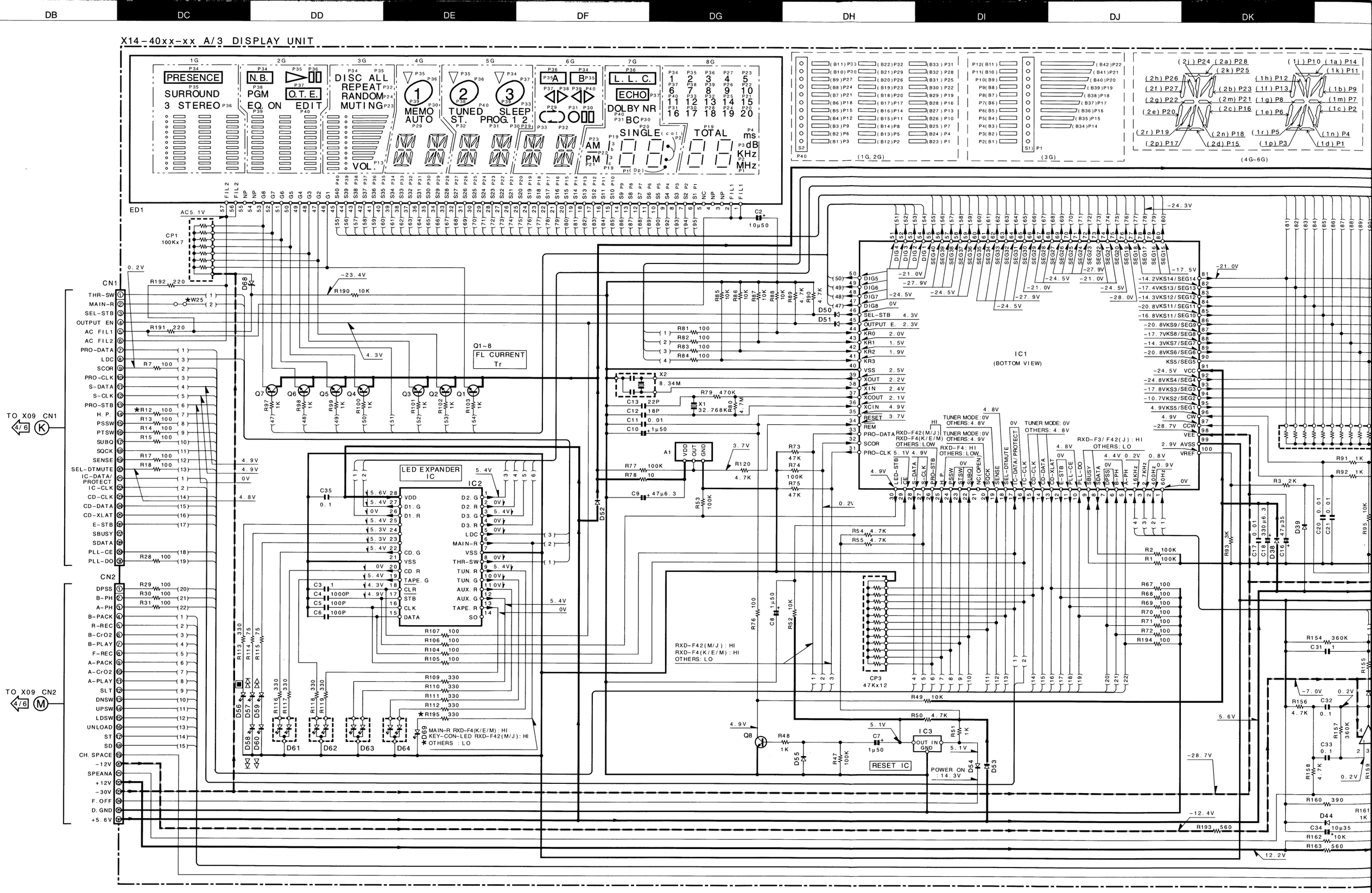
X14-40xx-xx A/3 DISPLAY UNIT
PRESENCE
SURROUND
3 STEREO
N.B.
PGM
EQ ON
O.T.E.
EDIT
DISC ALL
REPEAT
RANDOM
MUTING
MEMO
AUTO
TUNED
ST.
SLEEP
PROG. 1 2
L. L. C.
ECHO
DOLBY NR
BC
SINGLE
TOTAL
AM
PM
VOL.
ms
dB
KHz
MHz
ED1
CN1
CN2
TO X09 CN1
TO X09 CN2
CP1
100Kx7
CP3
47Kx12
IC1
(BOTTOM VIEW)
IC2
LED EXPANDER IC
IC3
RESET IC
Q1~8
FL CURRENT Tr
MAIN-R RXD-F4(K/E/M) : HI
KEY-CON-LED RXD-F42(M/J) : HI
OTHERS : LO
RXD-F42(M/J) : HI
RXD-F4(K/E/M) : HI
OTHERS: LO
POWER ON : 14.3V
(1G, 2G)
(3G)
(4G~6G)

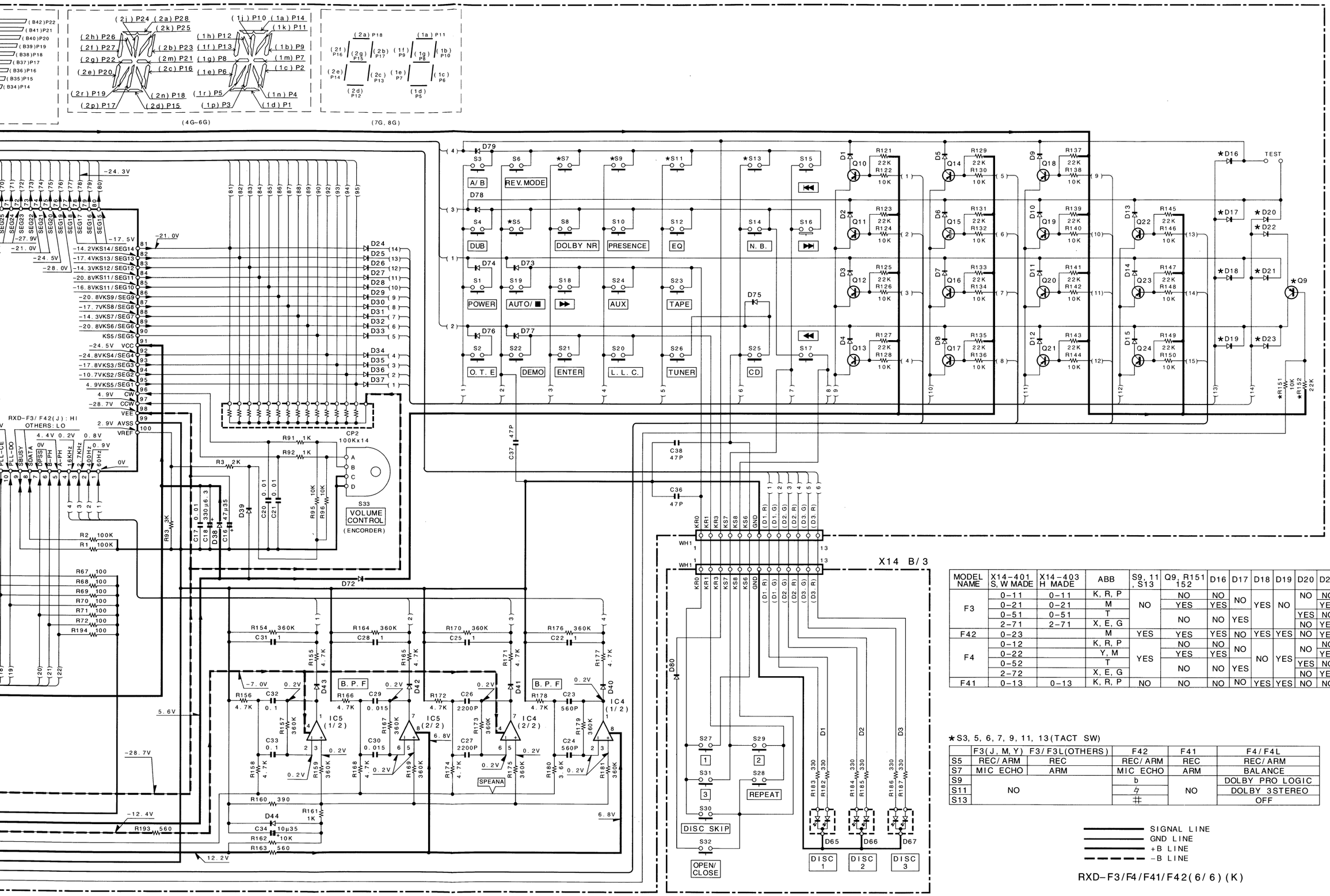

X14 A/3, B/3

IC1	: M38198MC-
IC2	: NJU3718G
IC3	: S-806D-Z PST993D-T
IC4, 5	: NJM4565D
Q1~8	: 2SC4081
Q9~24	: 2SA1576
D1~15, 17~21 23, 28~39, 44 50~55, 72 75~80	: 1SS131 or
D16, 22, 24~27, 40~43, 70, 71, 73, 74	: MA111
D56~60	: B30-2462-
D61~67	: B30-2476-
D68	: RD5. 1ES(B HZS5. 1N(B UZ-5. 1BSB
D69	: B30-1291-
ED1	: BJ344GK o

MODEL NAME	X14-401 S, W MADE	X14-403 H MADE	ABB	S9, 11, S13	Q9, R151 152	D16	D17	D18	D19	D20	D21	D22	D23	D69 R195	R12	W25
F3	0-11	0-11	K, R, P	NO	NO	NO	NO	YES	NO	NO	NO	NO	NO	NO	NO	NO
	0-21	0-21	M		YES	YES					YES	YES				
	0-51	0-51	T		NO	NO	YES			YES	NO	NO				
	2-71	2-71	X, E, G							NO	YES		YES			
F42	0-23		M	YES	YES	YES	NO	YES	YES	NO	YES	YES	NO	YES	NO	NO
F4	0-12		K, R, P	YES	NO	NO	NO	NO	YES	NO	NO	NO	NO	NO	YES	YES
	0-22		Y, M		YES	YES					YES	YES				
	0-52		T		NO	NO	YES			YES	NO	NO				
	2-72		X, E, G							NO	YES		YES			
F41	0-13	0-13	K, R, P	NO	NO	NO	NO	YES	YES	NO	NO	NO	NO	NO	NO	YES

★S3, 5, 6, 7, 9, 11, 13(TACT SW)

	F3(J, M, Y)	F3/F3L(OTHERS)	F42	F41	F4/F4L
S5	REC/ARM	REC	REC/ARM	REC	REC/ARM
S7	MIC ECHO	ARM	MIC ECHO	ARM	BALANCE
S9	NO		b	NO	DOLBY PRO LOGIC
S11			♮		DOLBY 3STEREO
S13			♯		OFF

SIGNAL LINE
GND LINE
+B LINE
-B LINE

RXD-F3/F4/F41/F42(6/6)(K)

Y39-2130-1

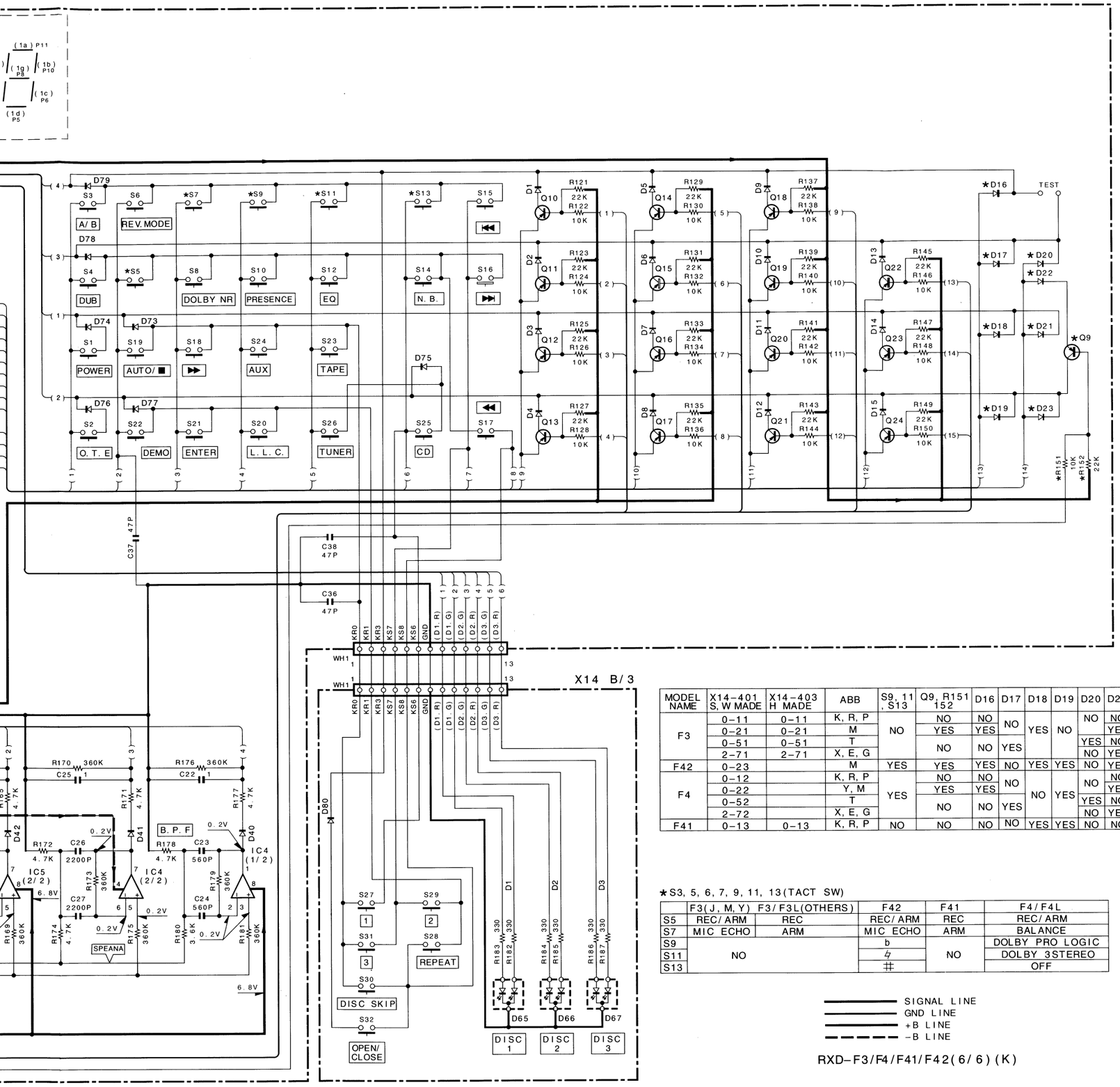

X14 A/3, B/3

IC1	: M38198MC-053FP
IC2	: NJU3718G
IC3	: S-806D-Z or PST993D-T
IC4, 5	: NJM4565D
Q1~8	: 2SC4081
Q9~24	: 2SA1576
D1~15, 17~21, 23, 28~39, 44, 50~55, 72, 75~80	: 1SS131 or HSS104A
D16, 22, 24~27, 40~43, 70, 71, 73, 74	: MA111
D56~60	: B30-2462-05
D61~67	: B30-2476-05
D68	: RD5.1ES(B2) or HZS5.1N(B2) or UZ-5.1BSB (F4, F42 ONLY)
D69	: B30-1291-05
ED1	: BJ344GK or FIP8AMW6R

MODEL NAME	X14-401 S, W MADE	X14-403 H MADE	ABB	S9, 11, S13	Q9, R151 152	D16	D17	D18	D19	D20	D21	D22	D23	D69 R195	R12	W25
F3	0-11	0-11	K, R, P	NO	NO	NO	NO	YES	NO	NO	NO	NO	NO	NO	NO	NO
	0-21	0-21	M		YES	YES					YES	YES				
	0-51	0-51	T		NO	NO	YES			YES	NO	NO				
	2-71	2-71	X, E, G							NO	YES		YES			
F42	0-23		M	YES	YES	YES	NO	YES	YES	NO	YES	YES	NO	YES	NO	NO
F4	0-12		K, R, P	YES	NO	NO	NO	NO	YES	NO	NO	NO	NO	NO	YES	YES
	0-22		Y, M		YES	YES					YES	YES				
	0-52		T		NO	NO	YES			YES	NO	NO				
	2-72		X, E, G							NO	YES		YES			
F41	0-13	0-13	K, R, P	NO	NO	NO	NO	YES	YES	NO	NO	NO	NO	NO	NO	YES

★S3, 5, 6, 7, 9, 11, 13(TACT SW)

	F3(J, M, Y)	F3/F3L(OTHERS)	F42	F41	F4/F4L
S5	REC/ARM	REC	REC/ARM	REC	REC/ARM
S7	MIC ECHO	ARM	MIC ECHO	ARM	BALANCE
S9	NO		b	NO	DOLBY PRO LOGIC
S11			♮		DOLBY 3STEREO
S13			♯		OFF

SIGNAL LINE
GND LINE
+B LINE
-B LINE

RXD-F3/F4/F41/F42(6/6)(K)

CAUTION: For continued safety, replace safety critical components only with manufacturer's recommended parts (refer to parts list). ⚠ indicates safety critical components. For continued protection against risk of fire, replace only with same type and rating fuse(s). To reduce the risk of electric shock, leakage-current or resistance measurements shall be carried out (exposed parts are acceptably insulated from the supply circuit) before the appliance is returned to the customer.

DOLBY and the double-D symbol are trademarks of Dolby Laboratories Licensing Corporation. Noise reduction circuit made under license from Dolby Laboratories Licensing Corporation.

DC voltages are as measured with a high impedance voltmeter. Values may vary slightly due to variations between individual instruments or/and units.

Les tensions c.c doivent être mesurées avec un voltmétre á haute impédance Les valeurs peuvent différer légérement du fait des variations inhérentes aux appareils et aux instruments de mesure individuels

Die angegebenen Gleichspannungswerte wurden mit einem hochohmigen Spannungsmesser gemessen. Dabei schwanken die Meßwerte aufgrund von Unterschieden zwischen einzelnen Instrumenten oder Geräten u. U geringfügig.

Y39-2130-11

RXD-F3/F4/F41/F42

KENWOOD

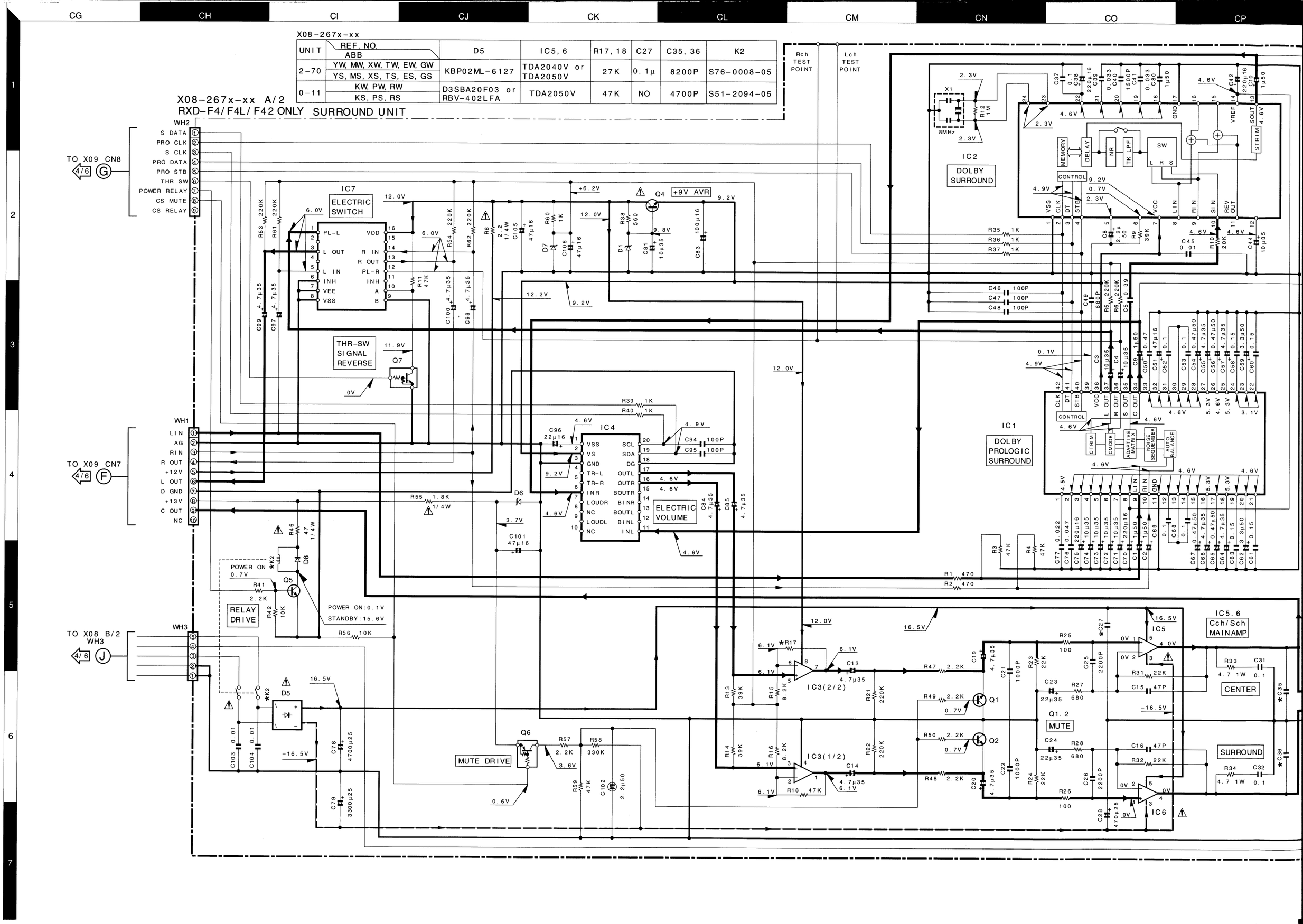

UNIT	REF, NO. / ABB	D5	IC5, 6	R17, 18	C27	C35, 36	K2
2-70	YW, MW, XW, TW, EW, GW	KBP02ML-6127	TDA2040V or TDA2050V	27K	0.1μ	8200P	S76-0008-05
	YS, MS, XS, TS, ES, GS						
0-11	KW, PW, RW	D3SBA20F03 or RBV-402LFA	TDA2050V	47K	NO	4700P	S51-2094-05
	KS, PS, RS						

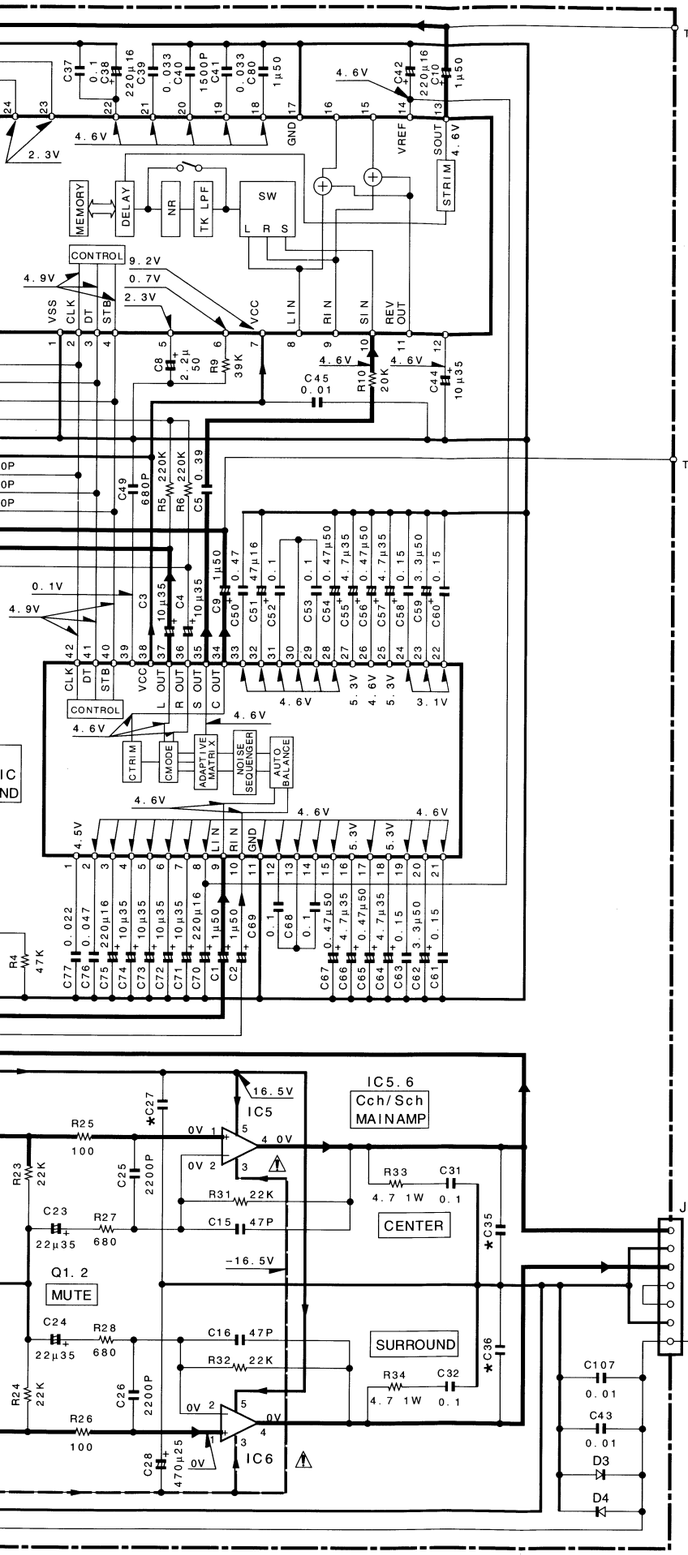

Sch
TEST POINT

X08-267x-xx

IC1	: LA2785
IC2	: LV1011
IC3	: NJM4565L-D
IC4	: TDA7315
IC5, 6	: ★
IC7	: XRU4052BC
D1	: RD10ES(B) or HZS10N(B)
D3, 4, 8	: HSS104A or 1SS131
D5	: ★
D6	: RD3.9ES(B2) or HZS3.9N(B2) or UZ-3.9BSB
D7	: RD6.2ES(B2) or HZS6.2ES(B2) or UZ-6.2BSB
Q1, 2	: 2SC2878(B)
Q5	: 2SC2003(L, K)
Q4	: 2SD2012 or 2SD2061
Q6	: DTA113ZS or UN4119
Q7	: DTC124ES or UN4212

Cch
TEST POINT

X11-3600-00 RXD-F42 ONLY CONTOL UNIT

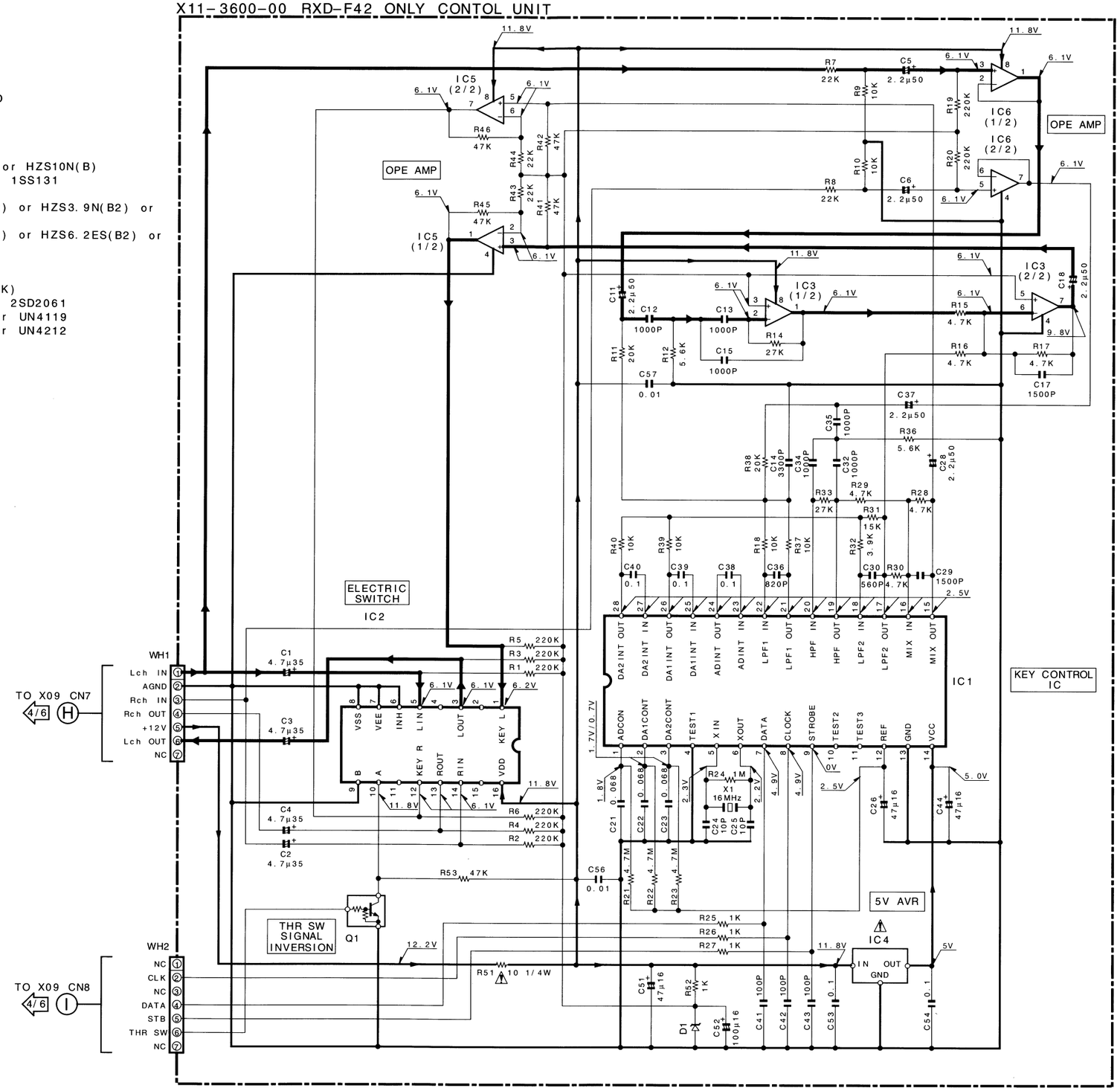

IC1	: M65840SP
IC2	: XRU4052BC
IC3, 5, 6	: NJM4565L-D
IC4	: UPC7805AHF or TA7805S
Q1	: DTC124ES or UN4212
D1	: RD6.2ES(B2) or HZS6.2N(B2) or UZ-6.2BSB

SIGNAL LINE
GND LINE
+B LINE
-B LINE

RXD-F3/F4/F41/F42(5/6)(K)

CAU
with
safet
repla
shoc
(expo
appli

DOL
Licen
Dolby

DC v
vary

Les t
haute
fait d
de m

Die a
hoch
Meßv
oder

CXD250

BU40

Y39-21

Sch
TEST POINT

X08-267x-xx

IC1	: LA2785
IC2	: LV1011
IC3	: NJM4565L-D
IC4	: TDA7315
IC5, 6	: *
IC7	: XRU4052BC
D1	: RD10ES(B) or HZS10N(B)
D3, 4, 8	: HSS104A or 1SS131
D5	: *
D6	: RD3.9ES(B2) or HZS3.9N(B2) or UZ-3.9BSB
D7	: RD6.2ES(B2) or HZS6.2ES(B2) or UZ-6.2BSB
Q1, 2	: 2SC2878(B)
Q5	: 2SC2003(L, K)
Q4	: 2SD2012 or 2SD2061
Q6	: DTA113ZS or UN4119
Q7	: DTC124ES or UN4212

Cch
TEST POINT

X11-3600-00 RXD-F42 ONLY CONTOL UNIT

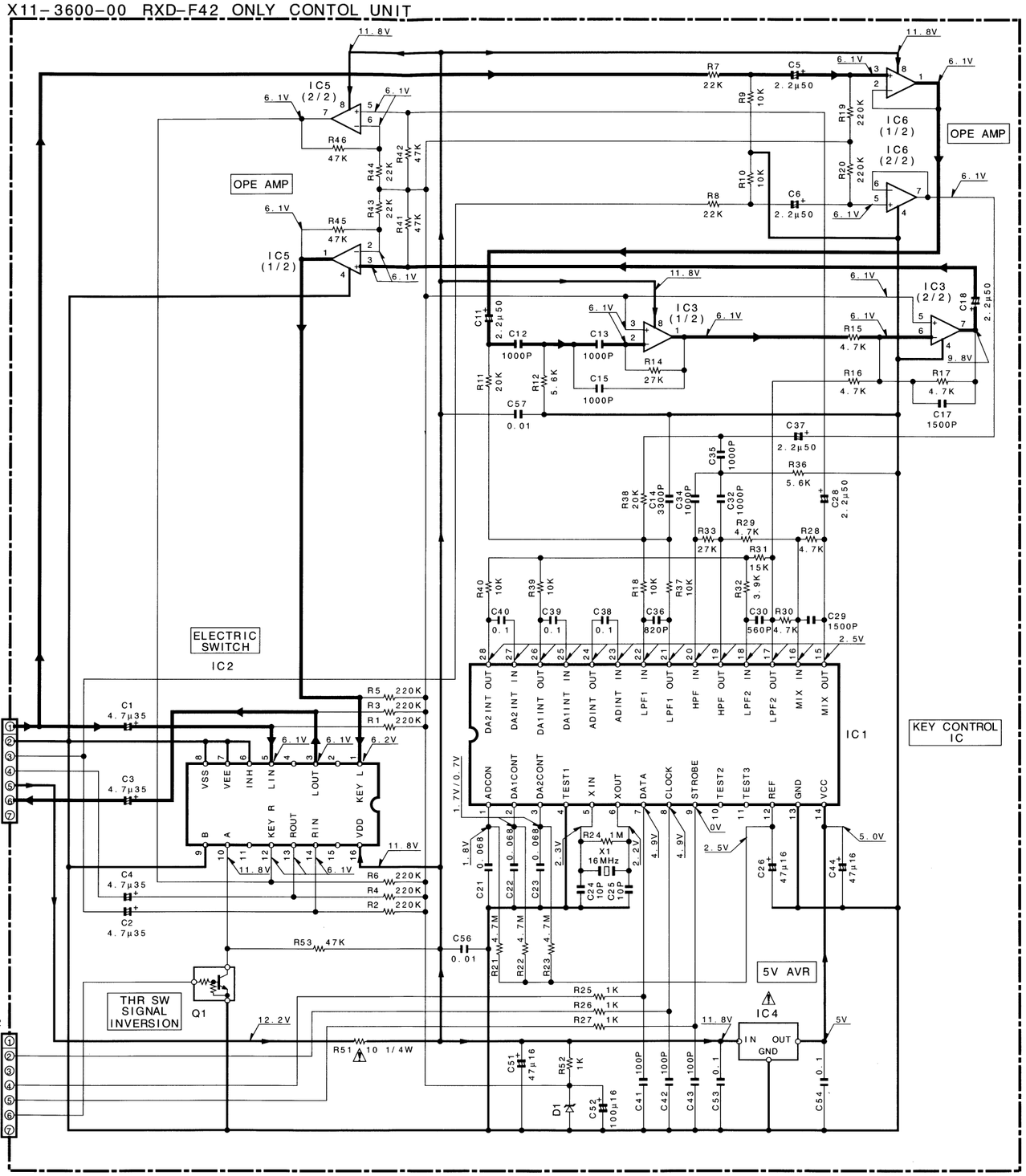

IC1	: M65840SP
IC2	: XRU4052BC
IC3, 5, 6	: NJM4565L-D
IC4	: UPC7805AHF or TA7805S
Q1	: DTC124ES or UN4212
D1	: RD6.2ES(B2) or HZS6.2N(B2) or UZ-6.2BSB

SIGNAL LINE
GND LINE
+B LINE
-B LINE

RXD-F3/F4/F41/F42(5/6)(K)

CAUTION: For continued safety, replace safety critical components only with manufacturer's recommended parts (refer to parts list). ⚠ indicates safety critical components. For continued protection against risk of fire, replace only with same type and rating fuse(s). To reduce the risk of electric shock, leakage-current or resistance measurements shall be carried out (exposed parts are acceptably insulated from the supply circuit) before the appliance is returned to the customer.

DOLBY and the double-D symbol are trademarks of Dolby Laboratories Licensing Corporation. Noise reduction circuit made under license from Dolby Laboratories Licensing Corporation.

DC voltages are as measured with a high impedance voltmeter. Values may vary slightly due to variations between individual instruments or/and units.

Les tensions c.c doivent être mesurées avec un voltmétre á haute impédance Les valeurs peuvent différer légérement du fait des variations inhérentes aux appareils et aux instruments de mesure individuels

Die angegebenen Gleichspannungswerte wurden mit einem hochohmigen Spannungsmesser gemessen. Dabei schwanken die Meßwerte aufgrund von Unterschieden zwischen einzelnen Instrumenten oder Geräten u. U geringfügig.

NJU7313AM

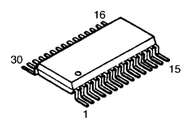

HA12182F

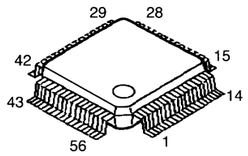

CXD2508AQ

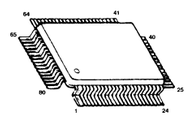

LC7218
LV1011

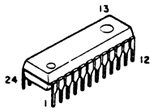

BA6398FP

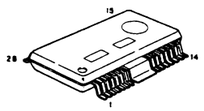

BU4094BCF

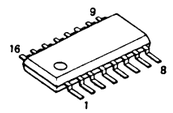

BU4094BC

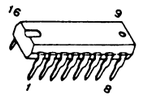

BA10393
XRA15218-DX

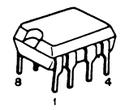

Y39-2130-11

RXD-F3/F4/F41/F42

KENWOOD

X14-40xx-xx A/3 DISPLAY UNIT

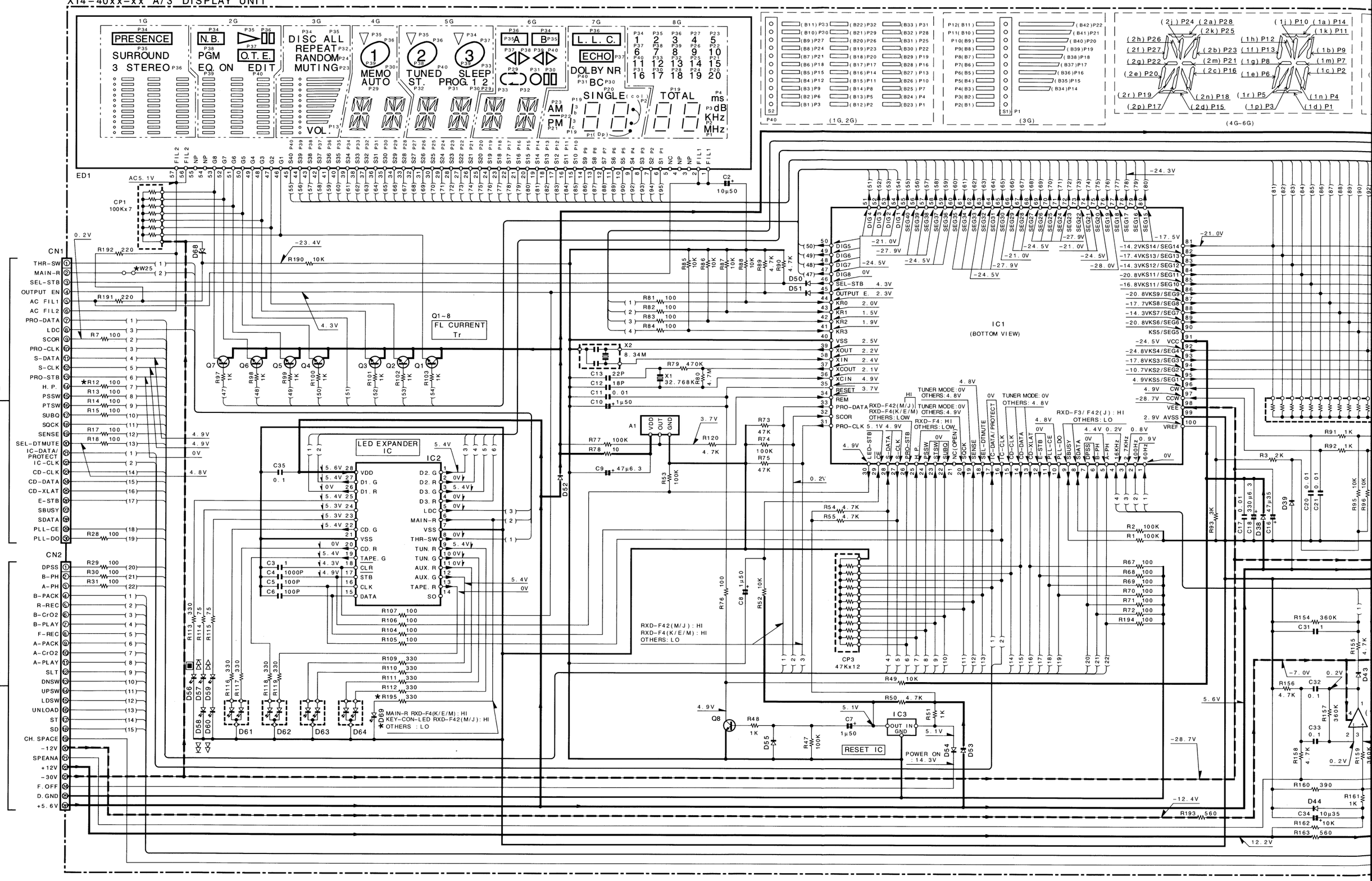

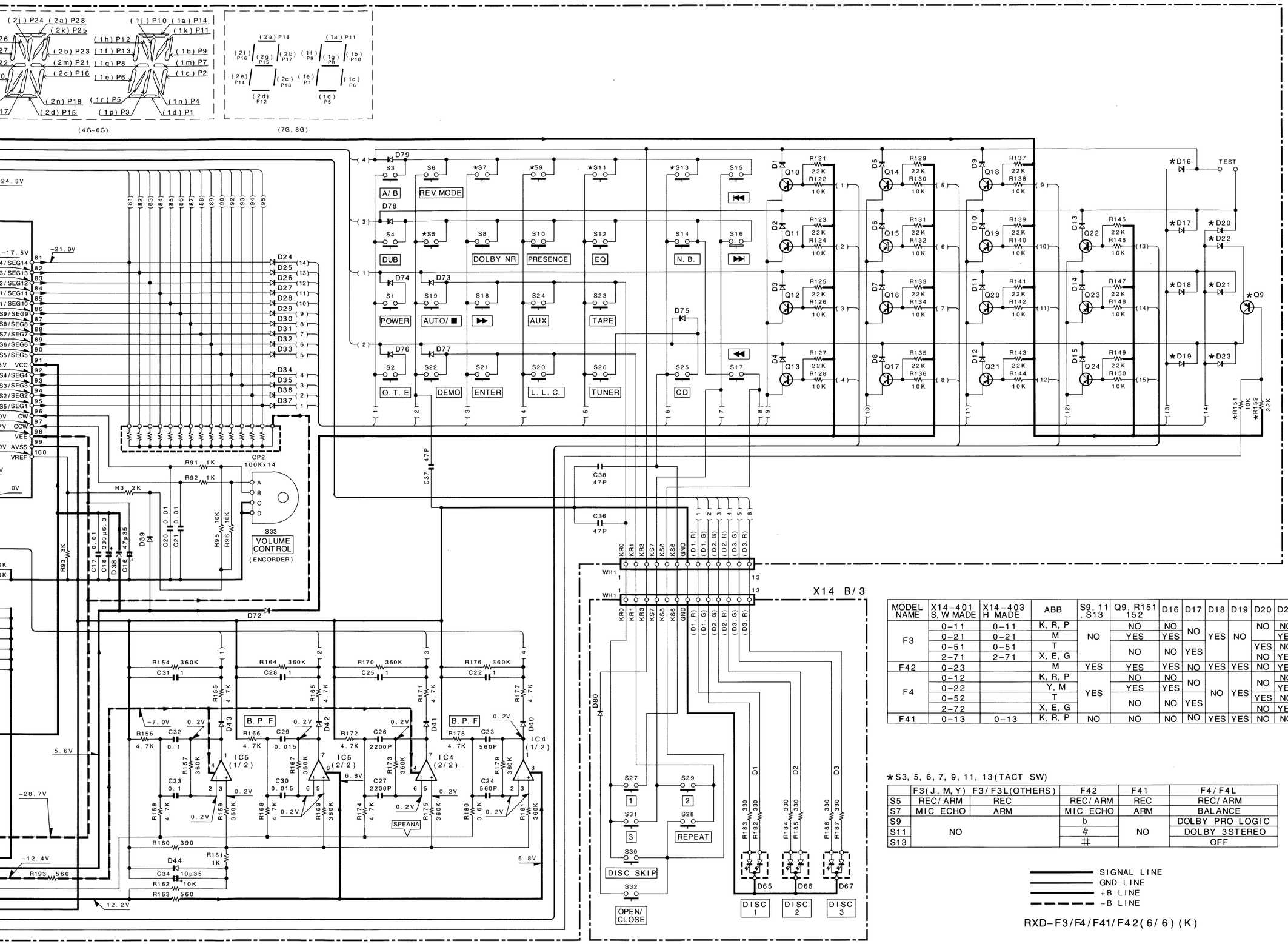

X14 A/3, B/3

IC1	: M38198MC-053FP
IC2	: NJU3718G
IC3	: S-806D-Z or PST993D-T
IC4, 5	: NJM4565D
Q1~8	: 2SC4081
Q9~24	: 2SA1576
D1~15, 17~21 23, 28~39, 44 50~55, 72 75~80	: 1SS131 or HSS104A
D16, 22, 24~27, 40~43, 70, 71, 73, 74	: MA111
D56~60	: B30-2462-05
D61~67	: B30-2476-05
D68	: RD5. 1ES(B2) or HZS5. 1N(B2) or UZ-5. 1BSB (F4, F42 ONLY)
D69	: B30-1291-05
ED1	: BJ344GK or FIP8AMW6R

MODEL NAME	X14-401 S, W MADE	X14-403 H MADE	ABB	S9, 11 , S13	Q9, R151 152	D16	D17	D18	D19	D20	D21	D22	D23	D69 R195	R12	W25
F3	0-11	0-11	K, R, P	NO	NO	NO	NO	YES	NO	NO	NO	NO	NO	NO	NO	NO
	0-21	0-21	M		YES	YES					YES	YES				
	0-51	0-51	T		NO	NO	YES			YES	NO	NO				
	2-71	2-71	X, E, G							NO	YES		YES			
F42	0-23		M	YES	YES	YES	NO	YES	YES	NO	YES	YES	NO	YES	NO	NO
F4	0-12		K, R, P	YES	NO	NO	NO	NO	YES	NO	NO	NO	NO	NO	YES	YES
	0-22		Y, M		YES	YES					YES	YES				
	0-52		T		NO	NO	YES			YES	NO	NO				
	2-72		X, E, G							NO	YES		YES			
F41	0-13	0-13	K, R, P	NO	NO	NO	NO	YES	YES	NO	NO	NO	NO	NO	NO	YES

★S3, 5, 6, 7, 9, 11, 13(TACT SW)

	F3(J, M, Y)	F3/F3L(OTHERS)	F42	F41	F4/F4L
S5	REC/ARM	REC	REC/ARM	REC	REC/ARM
S7	MIC ECHO	ARM	MIC ECHO	ARM	BALANCE
S9	NO		b	NO	DOLBY PRO LOGIC
S11			♮		DOLBY 3STEREO
S13			♯		OFF

SIGNAL LINE
GND LINE
+B LINE
-B LINE

RXD-F3/F4/F41/F42(6/6)(K)

CAUTION: For continu
with manufacturer's rec
safety critical compone
replace only with same t
shock, leakage-current
(exposed parts are acce
appliance is returned to

DOLBY and the double
Licensing Corporation.
Dolby Laboratories Licen

DC voltages are as mea
vary slightly due to varia

Les tensions c.c doivent
haute impédance Les
fait des variations inhére
de mesure individuels

Die angegebenen Gleich
hochohmigen Spannu
Meßwerte aufgrund vo
oder Geräten u. U gering

RXD

Y39-2130-11

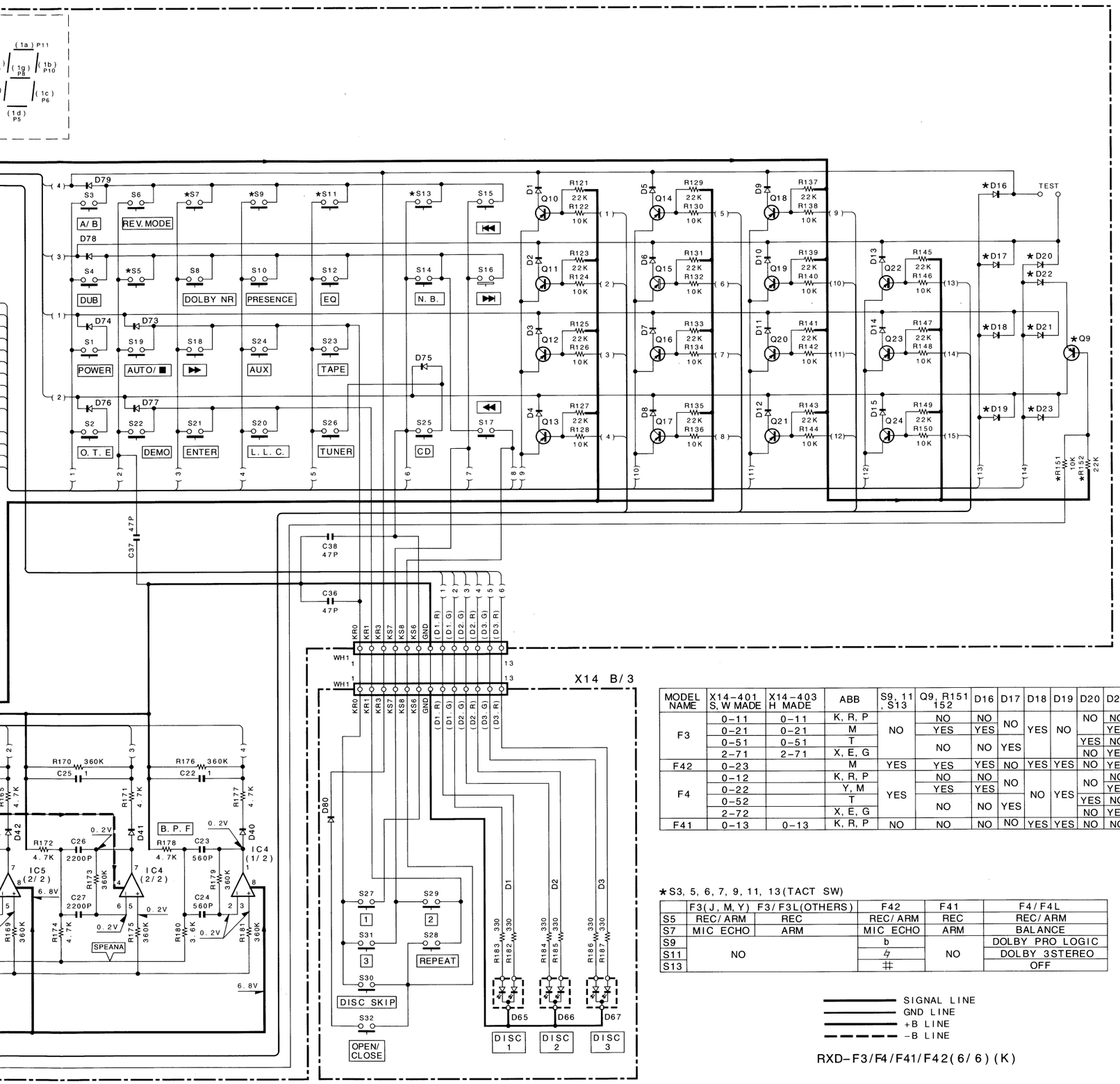

X14 A/3, B/3

IC1	: M38198MC-053FP
IC2	: NJU3718G
IC3	: S-806D-Z or PST993D-T
IC4, 5	: NJM4565D
Q1~8	: 2SC4081
Q9~24	: 2SA1576
D1~15, 17~21 23, 28~39, 44 50~55, 72 75~80	: 1SS131 or HSS104A
D16, 22, 24~27, 40~43, 70, 71, 73, 74	: MA111
D56~60	: B30-2462-05
D61~67	: B30-2476-05
D68	: RD5. 1ES(B2) or HZS5. 1N(B2) or UZ-5. 1BSB (F4, F42 ONLY)
D69	: B30-1291-05
ED1	: BJ344GK or FIP8AMW6R

MODEL NAME	X14-401 S, W MADE	X14-403 H MADE	ABB	S9, 11, S13	Q9, R151 152	D16	D17	D18	D19	D20	D21	D22	D23	D69 R195	R12	W25
F3	0-11	0-11	K, R, P	NO	NO	NO	NO	YES	NO	NO	NO	NO	NO	NO	NO	NO
	0-21	0-21	M		YES	YES					YES	YES				
	0-51	0-51	T		NO	NO	YES			YES	NO	NO				
	2-71	2-71	X, E, G							NO	YES		YES			
F42	0-23		M	YES	YES	YES	NO	YES	YES	NO	YES	YES	NO	YES	NO	NO
F4	0-12		K, R, P	YES	NO	NO	NO	NO	YES	NO	NO	NO	NO	NO	YES	YES
	0-22		Y, M		YES	YES					YES	YES				
	0-52		T		NO	NO	YES			YES	NO	NO				
	2-72		X, E, G							NO	YES		YES			
F41	0-13	0-13	K, R, P	NO	NO	NO	NO	YES	YES	NO	NO	NO	NO	NO	NO	YES

★S3, 5, 6, 7, 9, 11, 13(TACT SW)

	F3(J, M, Y)	F3/F3L(OTHERS)	F42	F41	F4/F4L
S5	REC/ARM	REC	REC/ARM	REC	REC/ARM
S7	MIC ECHO	ARM	MIC ECHO	ARM	BALANCE
S9	NO		b	NO	DOLBY PRO LOGIC
S11			♮		DOLBY 3STEREO
S13			♯		OFF

SIGNAL LINE
GND LINE
+B LINE
-B LINE

RXD-F3/F4/F41/F42(6/6)(K)

CAUTION: For continued safety, replace safety critical components only with manufacturer's recommended parts (refer to parts list). ⚠ indicates safety critical components. For continued protection against risk of fire, replace only with same type and rating fuse(s). To reduce the risk of electric shock, leakage-current or resistance measurements shall be carried out (exposed parts are acceptably insulated from the supply circuit) before the appliance is returned to the customer.

DOLBY and the double-D symbol are trademarks of Dolby Laboratories Licensing Corporation. Noise reduction circuit made under license from Dolby Laboratories Licensing Corporation.

DC voltages are as measured with a high impedance voltmeter. Values may vary slightly due to variations between individual instruments or/and units.

Les tensions c.c doivent être mesurées avec un voltmétre á haute impédance Les valeurs peuvent différer légérement du fait des variations inhérentes aux appareils et aux instruments de mesure individuels

Die angegebenen Gleichspannungswerte wurden mit einem hochohmigen Spannungsmesser gemessen. Dabei schwanken die Meßwerte aufgrund von Unterschieden zwischen einzelnen Instrumenten oder Geräten u. U geringfügig.

Y39-2130-11

RXD-F3/F4/F41/F42

KENWOOD

CASSETTE MECHANISM DESCRIPTION

How to drive the double cassette deck with one motor

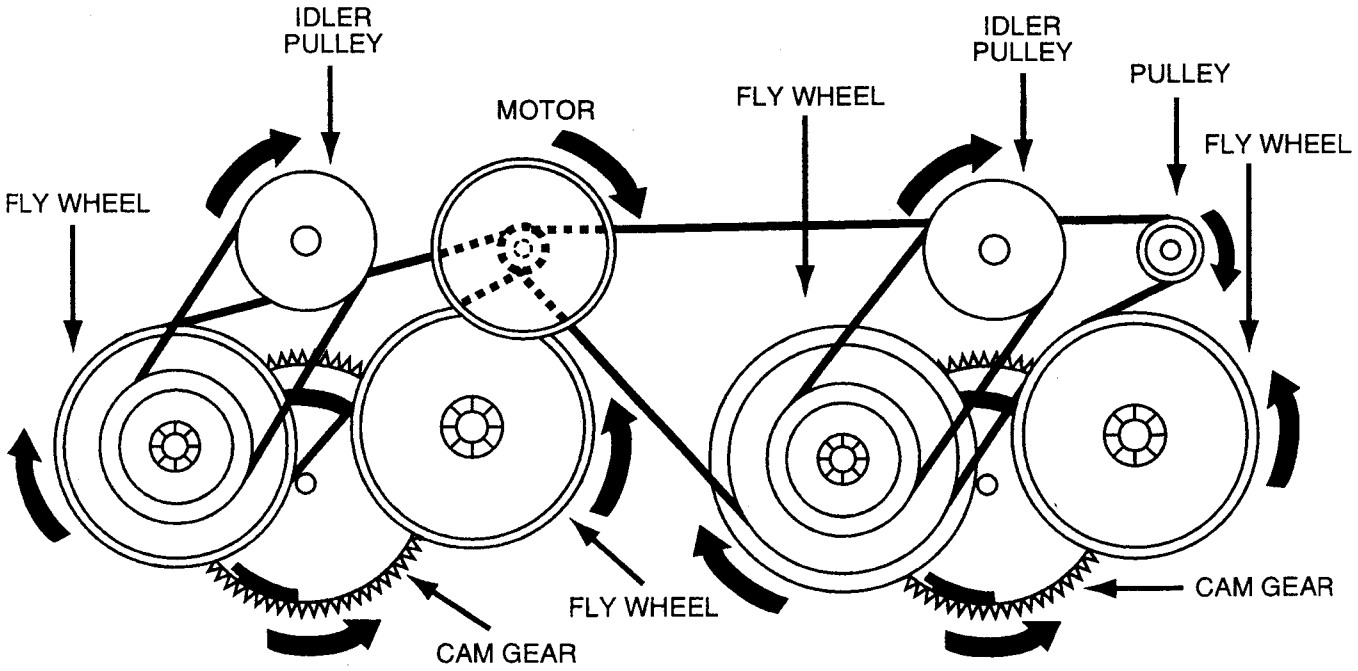

REAR VIEW

ONE MOTOR RVS MECH (GT-2400W)

RXD-F3/F4/F41/F42

EXPLODED VIEW(CD MECHANISM)

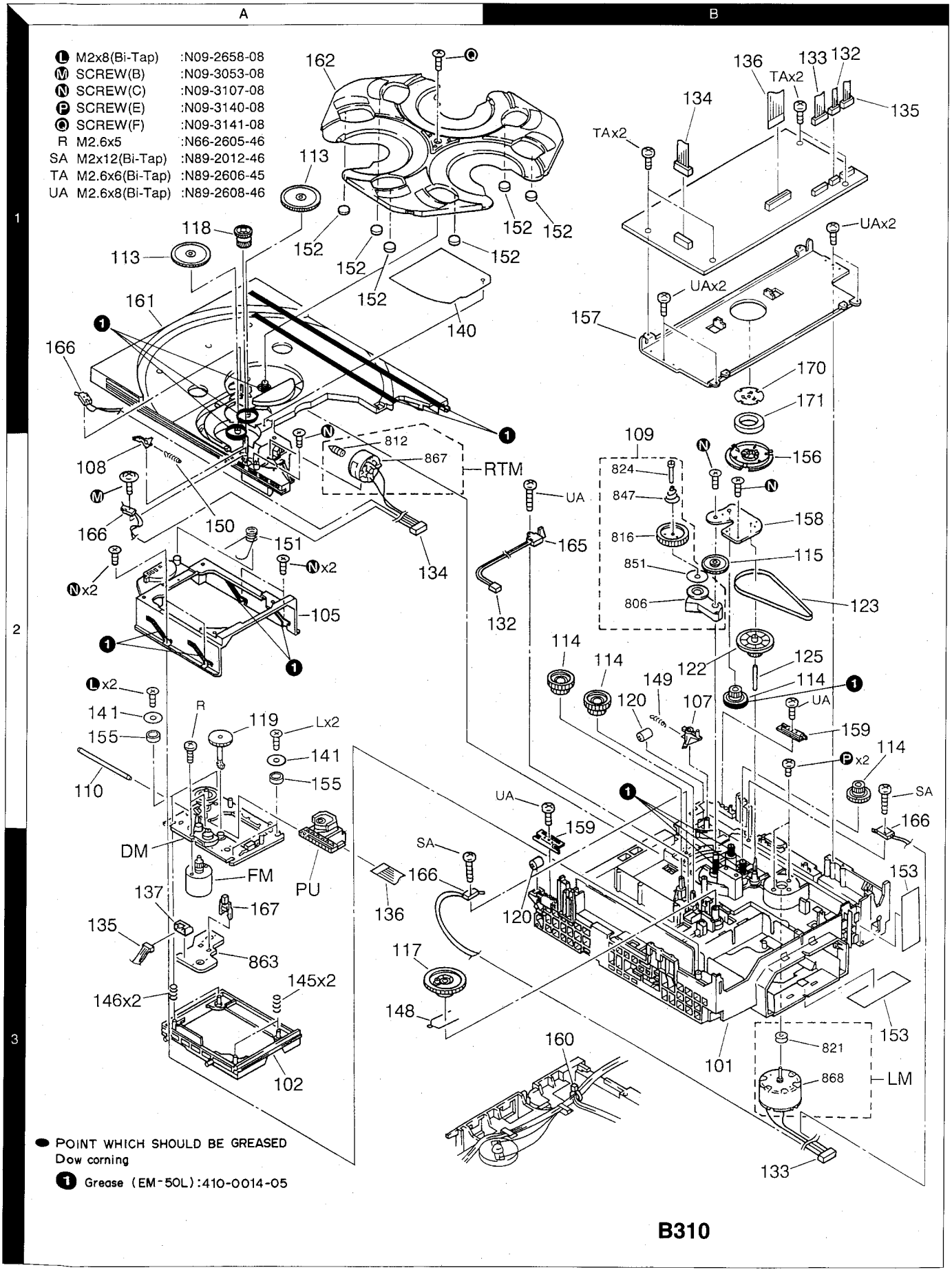

Parts with the exploded numbers larger than 700 are not supplied.

EXPLODED VIEW(UNIT)

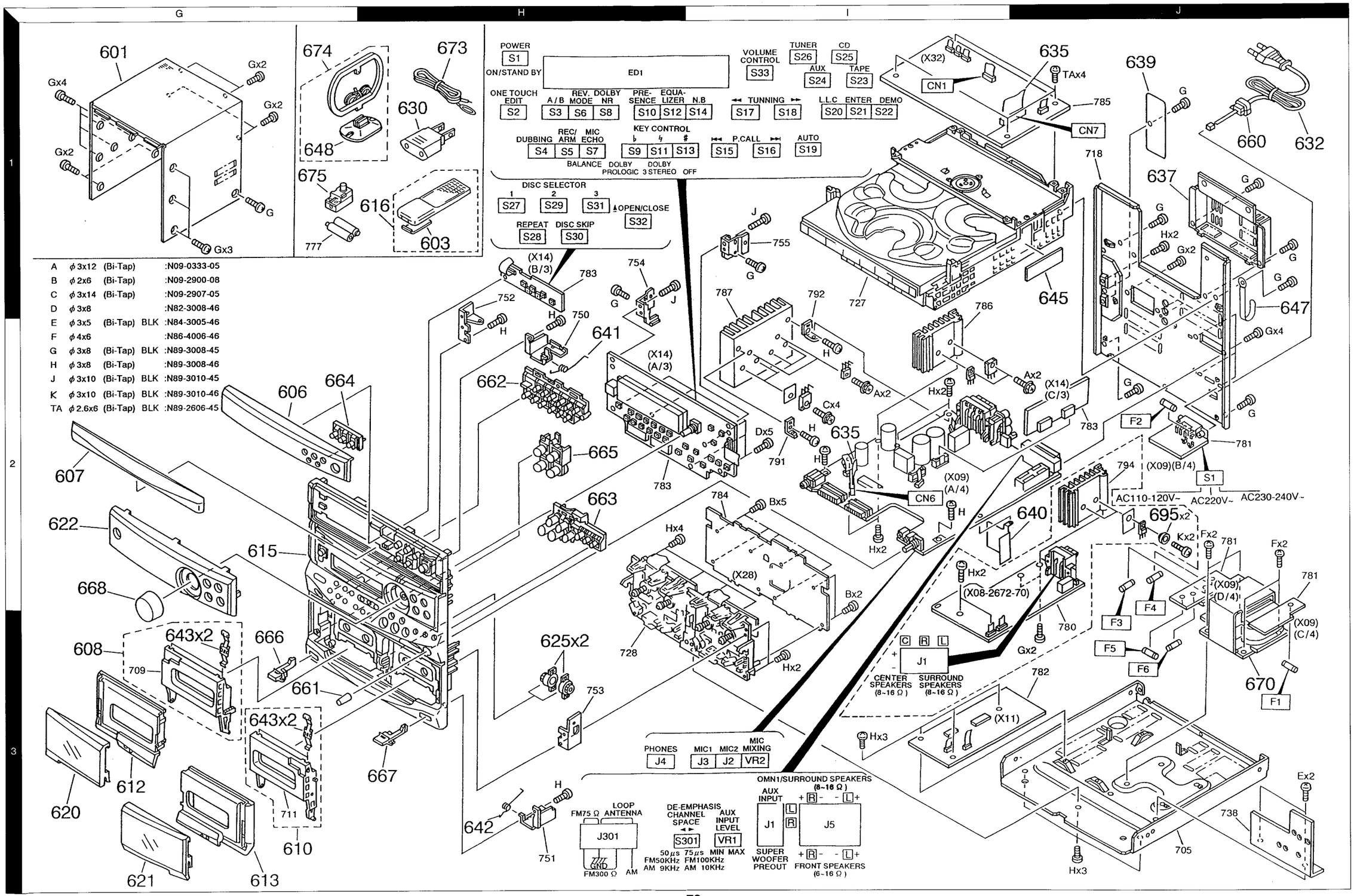

Parts with the exploded numbers larger than 700 are not supplied.

 RXD-F3/F4/F41/F42

EXPLODED VIEW(CASSETTE DECK MECHANISM)

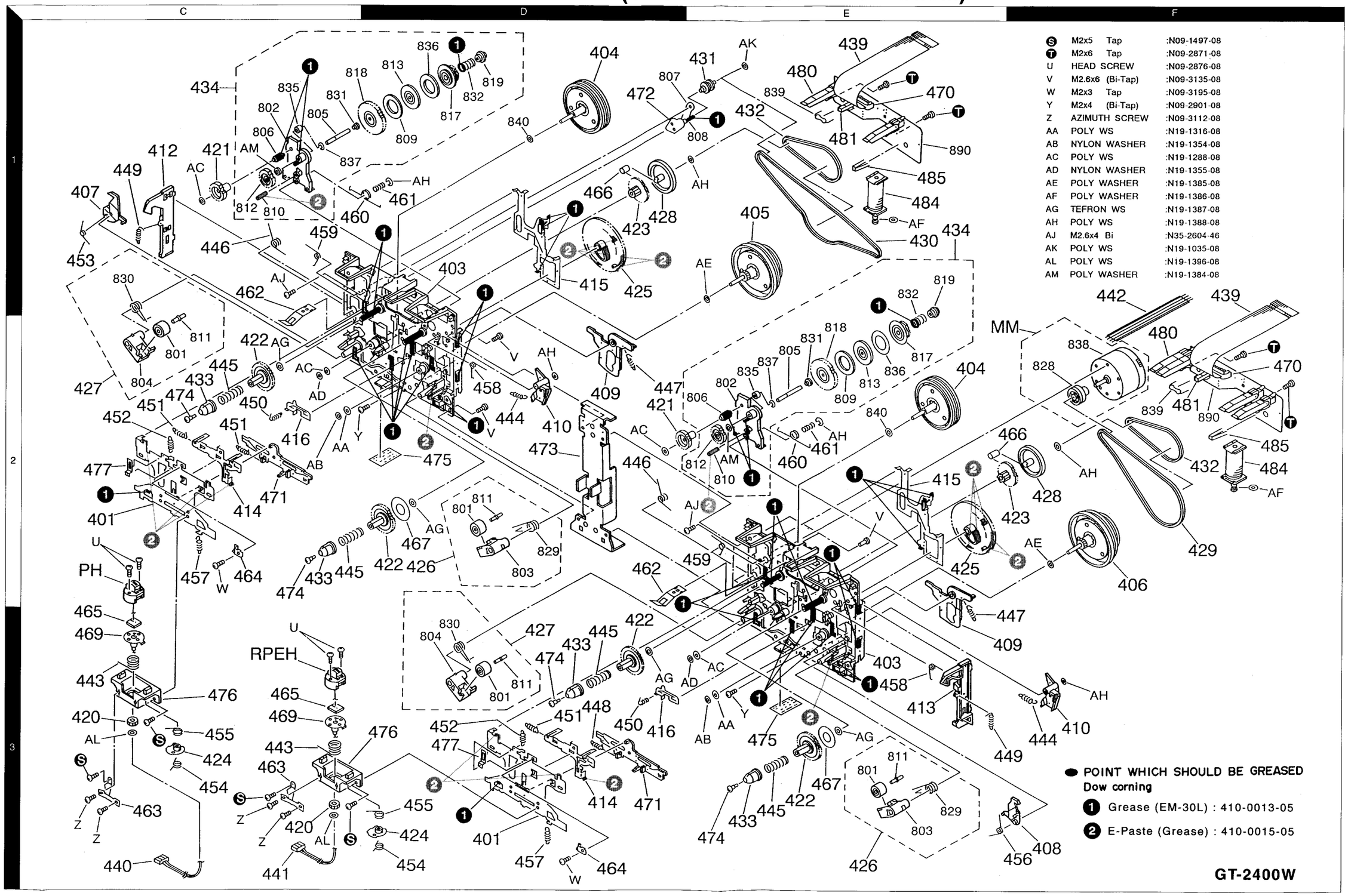

Parts with the exploded numbers larger than 700 are not supplied.

* New Parts
Parts without **Parts No.** are not supplied.
Les articles non mentionnes dans le **Parts No.** ne sont pas fournis.
Teile ohne **Parts No.** werden nicht geliefert.

NO. 1

Ref. No.	Address	New Parts	Parts No.	Description	Destination	Remarks
			RXD-F3/L			
601	1G	*	A01-3231-01	METALLIC CABINET		
603	1H		A09-0170-08	BATTERY COVER		
606	2G	*	A21-1870-32	DRESSING PANEL (CD)		1
606	2G	*	A21-1871-22	DRESSING PANEL (CD)		H
607	2G	*	A29-0397-02	PANEL (CD TRAY)		
608	3G		A53-1468-03	CASSETTE HOLDER ASSY(A DECK)		1
608	3G		A53-1837-13	CASSETTE HOLDER ASSY(A DECK)		H
610	3G		A53-1470-03	CASSETTE HOLDER ASSY(B DECK)		1
610	3G		A53-1839-13	CASSETTE HOLDER ASSY(B DECK)		H
612	3G	*	A53-1862-02	CASSETTE LID (A DECK)		1
612	3G	*	A53-1869-02	CASSETTE LID (A DECK)		H
613	3G	*	A53-1864-02	CASSETTE LID (B DECK)		1
613	3	*	A53-1873-02	CASSETTE LID (B DECK)		H
615	2G	*	A60-0730-11	PANEL	M	1
615	2G	*	A60-0732-11	PANEL	KRPXTE	1
615	2G	*	A60-0732-11	PANEL	G	1
615	2G	*	A60-0742-11	PANEL	M	H
615	2G	*	A60-0743-11	PANEL	KRPXTE	H
615	2G	*	A60-0743-11	PANEL	G	H
616	1H	*	A70-1020-05	REMOTE CONTROLLER ASSY(RC-F3)		
620	3G	*	B10-2100-13	FRONT GLASS (A DECK)		1
620	3G	*	B10-2111-13	FRONT GLASS (A DECK)		H
621	3G	*	B10-2101-13	FRONT GLASS (B DECK)		1
621	3G	*	B10-2112-13	FRONT GLASS (B DECK)		H
622	2G	*	B10-2107-02	FRONT GLASS (RECEIVER)	MI	1
622	2G	*	B10-2109-12	FRONT GLASS (RECEIVER)	KRPXEG	1
622	2G	*	B10-2110-12	FRONT GLASS (RECEIVER)	T	1
622	2G	*	B10-2114-02	FRONT GLASS (RECEIVER)	M	H
622	2G	*	B10-2115-12	FRONT GLASS (RECEIVER)	KRPXEG	H
622	2G	*	B10-2116-12	FRONT GLASS (RECEIVER)	T	H
			B46-0096-53	WARRANTY CARD	X	
-			B46-0121-33	WARRANTY CARD	P	
-		*	B46-0307-23	WARRANTY CARD	K	
-			B46-0310-03	WARRANTY CARD	TEG	
-		*	B46-0319-00	QUESTIONAIRE CARD	T	
-			B58-0964-13	CAUTION CARD (UL)	KR	
-		*	B58-0965-13	CAUTION CARD (PL)	XT	
-		*	B58-0966-13	CAUTION CARD (PL)	MEI	
-		*	B58-0967-03	CAUTION CARD (PL)	P	
-		*	B58-0970-13	CAUTION CARD (R,G TYPE PL)	RG	
-		*	B60-2170-00	INSTRUCTION MANUAL(ENGLISH)	T	
-		*	B60-2171-00	INSTRUCTION MANUAL(ENGLISH)	KRP	
-		*	B60-2172-00	INSTRUCTION MANUAL(FRENCH)	PE	
-		*	B60-2173-00	INSTRUCTION MANUAL(GERMANY)	EG	
-		*	B60-2174-00	INSTRUCTION MANUAL(DENT)	E	
		*	B60-2175-00	INSTRUCTION MANUAL(ITALY)	E	
-		*	B60-2176-00	INSTRUCTION MANUAL(SPANISH)	RE	
-		*	B60-2177-10	INSTRUCTION MANUAL(CHINESES)	MI	
-		*	B60-2178-10	INSTRUCTION MANUAL(TIWAN)	M	
-		*	B60-2255-00	INSTRUCTION MANUAL(ENGLISH)	MXI	
-		*	B60-2256-00	INSTRUCTION MANUAL(SPANISH)	M	
625	3H	*	D39-0322-05	DAMPER		

L:Scandinavia **K:** USA **P:** Canada **H:** HUIZHOU made
Y: PX(Far East, Hawaii) **T:** England **E:**Europe **1:** SINGAPORE, MALAYSIA made common
Y:AAFES(Europe) **X:** Australia **M:** Other Areas
⚠ indicates safety critical components.

* New Parts
Parts without **Parts No.** are not supplied.
Les articles non mentionnes dans le **Parts No.** ne sont pas fournis.
Teile ohne **Parts No.** werden nicht geliefert.

NO. 2

	Ref. No.	Address	New Parts	Parts No.	Description	Destination	Remarks
⚠	630	1H		E03-0115-05	AC PLUG ADAPTER	MI	
⚠	632	1J		E30-2787-05	AC POWER CORD	KRP	
⚠	632	1J		E30-2788-05	AC POWER CORD	MEGI	
⚠	632	1J		E30-2790-05	AC POWER CORD	T	
⚠	632	1J		E30-2791-05	AC POWER CORD	T	
	635	2I,1J	*	E35-1174-05	FLAT CABLE		
	637	1J	*	F07-0757-03	COVER		
	639	1J	*	F20-1432-04	INSULATING SHEET		
	-		*	F10-0980-13	SHIELDING PLATE	TEG	
	641	2H	*	G01-3810-24	TORSION COIL SPRING		
	642	3H	*	G01-3811-24	TORSION COIL SPRING		
	643	3G		G02-1057-14	FLAT SPRING		
	645	1J	*	G11-2239-14	CUSHION	KRP	
	-		*	H10-7047-12	POLYSTYRENE FOAMED FIXTURE		
	-		*	H10-7048-12	POLYSTYRENE FOAMED FIXTURE		
	-			H13-0086-04	CARTON BOARD		
	-			H25-0632-24	PROTECTION BAG	KRPMXE	
	-			H25-0632-24	PROTECTION BAG	GI	
	-			H25-0644-04	PROTECTION BAG (0632 PRINTED)	T	
	-			H25-1509-04	PROTECTION BAG	MI	
	-			H25-1536-04	PROTECTION BAG	KRPXTE	
	-			H25-1536-04	PROTECTION BAG	G	
	-		*	H50-1487-04	ITEM CARTON CASE	KPX	W
	-		*	H50-1488-04	ITEM CARTON CASE	M	W
	-		*	H50-1489-04	ITEM CARTON CASE	T	W
	-		*	H50-1490-04	ITEM CARTON CASE	REG	W
	-		*	H50-1491-04	ITEM CARTON CASE	KP	H
	-		*	H50-1492-04	ITEM CARTON CASE	MX	H
	-		*	H50-1493-04	ITEM CARTON CASE	REG	H
	-		*	H50-1569-04	ITEM CARTON CASE	KPX	S
	-		*	H50-1570-04	ITEM CARTON CASE	M	S
	-		*	H50-1571-04	ITEM CARTON CASE	T	S
	-		*	H50-1572-04	ITEM CARTON CASE	REG	S
	-		*	H50-1652-04	ITEM CARTON CASE	I	W
	647	1J		J19-2808-05	HOLDER	MI	
	648	1G		J19-3645-05	AM ANTENNA HOLDER		
⚠	660	1J		J42-0083-05	POWER CORD BUSHING		
	-			J61-0307-05	WIRE BAND	MI	
	661	3G		K29-6033-04	KNOB (MIC MIXING)		
	662	2H	*	K29-6135-02	KNOB (DUBB,REC,ARM)		1
	662	2H	*	K29-6138-02	KNOB (DUBB,REC,ARM)		H
	663	2H	*	K29-6121-12	KNOB (TUNING,P.CALL)		1
	663	2H	*	K29-6139-12	KNOB (TUNING,P.CALL)		H
	664	1J	*	K29-6122-13	KNOB (DISC SELECTOR)		1
	664	2G	*	K29-6140-13	KNOB (DISC SELECTOR)		H
	665	2H	*	K29-6123-13	KNOB (INPUT SELECTOR)		1
	665	2H	*	K29-6141-13	KNOB (INPUT SELECTOR)		H
	666	3G	*	K29-6124-14	KNOB (EJECT A)		1
	666	3G	*	K29-6142-14	KNOB (EJECT A)		H
	667	3G	*	K29-6125-14	KNOB (EJECT B)		1
	667	3G	*	K29-6143-14	KNOB (EJECT B)		H
	668	2G	*	K29-6149-14	KNOB (VOLUME CONTROL)		

L:Scandinavia **K:** USA **P:** Canada **W:** MALAYSIA made **H:** HUIZHOU made
Y: PX(Far East, Hawaii) **T:** England **E:**Europe **S:** SINGAPORE made **I:** Malaysia
Y:AAFES(Europe) **X:** Australia **M:** Other Areas
1: SINGAPORE, MALAYSIA made common
⚠ indicates safety critical components.

RXD-F3/F4/F41/F42

PARTS LIST

✱ New Parts
Parts without **Parts No.** are not supplied.
Les articles non mentionnes dans le **Parts No.** ne sont pas fournis.
Teile ohne **Parts No.** werden nicht geliefert.

NO. 3

	Ref. No.	Add-ress	New Parts	Parts No.	Description	Desti-nation	Re-marks
⚠	670	3J	✱	L07-1924-05	POWER TRANSFORMER	KRP	
⚠	670	3J	✱	L07-1925-05	POWER TRANSFORMER	TEG	
⚠	670	3J	✱	L07-1926-05	POWER TRANSFORMER	X	
⚠	670	3J	✱	L07-1928-05	POWER TRANSFORMER	MI	
	B			N09-2900-08	BINDING HEAD TAPTITE SCREW		
	673	1H		T90-0182-15	LEAD WIRE ANTENNA		
	673	1H		T90-0801-05	LEAD WIRE ANTENNA		
	674	1G		T90-0195-05	LOOP ANTENNA		
	675	1G		T90-0198-05	ANTENNA ADAPTOR	TEG	
				RXD-F4/L			
	601	1G	✱	A01-3229-11	METALLIC CABINET		
	603	1H		A09-0170-08	BATTERY COVER		
	606	2G	✱	A21-1870-32	DRESSING PANEL (CD)		1
	607	2G	✱	A29-0397-02	PANEL (CD TRAY)		
	608	3G		A53-1468-03	CASSETTE HOLDER ASSY (A DECK)		1
	610	3G		A53-1470-03	CASSETTE HOLDER ASSY (B DECK)		1
	612	3G	✱	A53-1862-02	CASSETTE LID (A DECK)		1
	613	3G	✱	A53-1864-02	CASSETTE LID (B DECK)		1
	615	2G	✱	A60-0728-21	PANEL		1
	616	1H	✱	A70-1018-05	REMOTECONTROLLER ASSY(RC-F4)		
	620	3G	✱	B10-2100-13	FRONT GLASS (A DECK)		1
	621	3G	✱	B10-2101-13	FRONT GLASS (B DECK)		1
	622	2G	✱	B10-2106-02	FRONT GLASS (RECEIVER)	KRPYMT	1
	622	2G	✱	B10-2106-02	FRONT GLASS (RECEIVER)	EG	1
	622	2G	✱	B10-2108-02	FRONT GLASS (RECEIVER)	T	1
	-			B46-0096-53	WARRANTY CARD	X	
	-			B46-0121-33	WARRANTY CARD	P	
	-		✱	B46-0307-23	WARRANTY CARD	KY	
	-			B46-0310-03	WARRANTY CARD	TEG	
	-		✱	B46-0319-00	QUESTIONAIRE CARD	T	
	-		✱	B58-0964-13	CAUTION CARD (UL)	KRY	
	-		✱	B58-0965-13	CAUTION CARD (PL)	XT	
	-		✱	B58-0966-13	CAUTION CARD (PL)	ME	
	-		✱	B58-0967-03	CAUTION CARD (PL)	P	
	-		✱	B58-0968-04	CAUTION CARD	Y	
	-		✱	B58-0970-13	CAUTION CARD (PL)	RG	
	-		✱	B59-1104-00	SERVICE DIRECTORY	Y	
	-		✱	B60-2145-00	INSTRUCTION MANUAL (ENGLISH)	KT	
	-		✱	B60-2146-00	INSTRUCTION MANUAL (FRENCH)	E	
	-		✱	B60-2147-00	INSTRUCTION MANUAL (GERMAN)	EG	
	-		✱	B60-2148-00	INSTRUCTION MANUAL (DUTCH)	E	
	-		✱	B60-2149-00	INSTRUCTION MANUAL (ITALAN)	E	
	-		✱	B60-2151-00	INSTRUCTION MANUAL (SPANISH)	E	
	-		✱	B60-2251-00	INSTRUCTION MANUAL (ENGLISH)	YMX	
	-		✱	B60-2252-00	INSTRUCTION MANUAL (SPANISH)	M	
	-		✱	B60-2334-00	INSTRUCTION MANUAL (ENGLISH)	KRP	
	-		✱	B60-2335-00	INSTRUCTION MANUAL (FRENCH)	P	
	-		✱	B60-2336-00	INSTRUCTION MANUAL (SPANISH)	R	
	625	3H	✱	D39-0321-05	DAMPER		
⚠	630	1H		E03-0115-05	AC PLUG ADAPTER	M	
⚠	632	1J		E30-2592-15	AC POWER CORD	MEG	
⚠	632	1J		E30-2605-05	AC POWER CORD	Y	
⚠	632	1J		E30-2650-05	AC POWER CORD	KRP	

L:Scandinavia **K:** USA **P:** Canada **1:** SINGAPORE, MALAYSIA made common
Y: PX(Far East, Hawaii) **T:** England **E:**Europe
Y:AAFES(Europe) **X:** Australia **M:** Other Areas

⚠ indicates safety critical components.

✱ New Parts
Parts without **Parts No.** are not supplied.
Les articles non mentionnes dans le **Parts No.** ne sont pas fournis.
Teile ohne **Parts No.** werden nicht geliefert.

NO. 4

	Ref. No.	Add-ress	New Parts	Parts No.	Description	Desti-nation	Re-marks
⚠	632	1J		E30-2717-05	AC POWER CORD	X	
⚠	632	1J		E30-2721-05	AC POWER CORD	T	
	635	1J,2	✱	E35-1129-05	FLAT CABLE		
	637	1J	✱	F07-0757-03	COVER		
	639	1J	✱	F20-1431-04	INSULATING SHEET		
	640		✱	F20-1448-03	INSULATING SHEET		
	641	2H	✱	G01-3810-24	TORSION COIL SPRING (A DECK)		
	642	3H	✱	G01-3811-24	TORSION COIL SPRING (B DECK)		
	643	3G		G02-1040-04	FLAT SPRING		
	645	1J	✱	G11-2241-14	CUSHION	KRPY	
	-		✱	H10-7017-12	POLYSTYRENE FOAMED FIXTURE		
	-		✱	H10-7018-12	POLYSTYRENE FOAMED FIXTURE		
	-			H13-0086-04	CARTON BOARD		
	-			H25-0632-24	PROTECTION BAG	KRPYMX	
	-			H25-0632-24	PROTECTION BAG	EG	
	-			H25-0644-04	PROTECTION BAG (0632 PRINTED)	T	
	-			H25-1509-04	PROTECTION BAG	M	
	-			H25-1536-04	PROTECTION BAG	KRPYXT	
	-			H25-1536-04	PROTECTION BAG	EG	
	-		✱	H50-1496-04	ITEM CARTON CASE	REG	W
	-		✱	H50-1497-04	ITEM CARTON CASE	T	W
	-		✱	H50-1500-04	ITEM CARTON CASE	KPYX	W
	-		✱	H50-1548-04	ITEM CARTON CASE	M	
	-		✱	H50-1563-04	ITEM CARTON CASE	REG	S
	-		✱	H50-1564-04	ITEM CARTON CASE	T	S
	-		✱	H50-1566-04	ITEM CARTON CASE	KPYX	S
	647	1J		J19-2808-05	HOLDER	M	
	648	1G		J19-3645-05	AM LOOP ANNTENA STAND		
⚠	660	1J		J42-0083-05	POWER CORD BUSHING		
	-			J61-0307-05	WIRE BAND		
	661	3G		K29-6033-04	KNOB (MIC MIXING)		
	662	2H	✱	K29-6120-02	KNOB (DUBB.,REC,ARM)		1
	663	2H	✱	K29-6121-12	KNOB (TUNIG,P.COLL)		1
	664	2G	✱	K29-6122-13	KNOB (DISC SELECTOR)		1
	665	2H	✱	K29-6123-13	KNOB (INPUT SELECTOR)		1
	666	3G	✱	K29-6124-14	KNOB (EJECT A)		1
	667	3G	✱	K29-6125-14	KNOB (EJECT B)		1
	668	2G	✱	K29-6149-14	KNOB (VOLUME CONTROL)		
⚠	670	3J	✱	L07-1929-05	POWER TRANSFORMER	TEG	
⚠	670	3J	✱	L07-1930-05	POWER TRANSFORMER	X	
⚠	670	3J	✱	L07-1954-05	POWER TRANSFORMER	YM	
⚠	670	3J	✱	L07-2014-05	POWER TRANSFORMER	KRP	
	B			N09-2900-08	BINDING HEAD TAPTITE SCRE		W
	673	1H		T90-0182-15	LEAD WIRE ANTENNA		
	673	1H		T90-0801-05	LEAD WIRE ANTENNA		
	674	1G		T90-0195-05	LOOP ANTENNA		
	675	1G		T90-0198-05	ANTENNA ADAPTOR	TEG	
				RXD-41			
	601	1G	✱	A01-3231-01	METALLIC CABINET		
	606	2G	✱	A21-1870-32	DRESSING PANEL (CD)		1
	606	2G	✱	A21-1871-22	DRESSING PANEL (CD)		H
	607	2G	✱	A29-0397-02	PANEL (CD TRAY)		

L:Scandinavia **K:** USA **P:** Canada **W:** MALAYSIA made **H:** HUIZHOU made
Y: PX(Far East, Hawaii) **T:** England **E:**Europe **S:** SINGAPORE made
Y:AAFES(Europe) **X:** Australia **M:** Other Areas
1: SINGAPORE, MALAYSIA made common

⚠ indicates safety critical components.

✱ New Parts
Parts without **Parts No.** are not supplied.
Les articles non mentionnes dans le **Parts No.** ne sont pas fournis.
Teile ohne **Parts No.** werden nicht geliefert.

NO. 5

Ref. No.	Address	New Parts	Parts No.	Description	Destination	Remarks
608	3G		A53-1468-03	CASSETTE HOLDER ASSY (A DECK)		1
608	3G		A53-1837-13	CASSETTE HOLDER ASSY (A DECK)		H
610	3G	✱	A53-1470-13	CASSETTE HOLDER ASSY (B DECK)		1
610	3G		A53-1839-13	CASSETTE HOLDER ASSY (B DECK)		H
612	3G	✱	A53-1862-02	CASSETTE LID (A DECK)		1
612	3G	✱	A53-1869-02	CASSETTE LID (A DECK)		H
613	3G	✱	A53-1864-02	CASSETTE LID (B DECK)		1
613	3G	✱	A53-1873-02	CASSETTE LID (B DECK)		H
615	2G	✱	A60-0732-11	PANEL		1
615	2G	✱	A60-0743-11	PANEL		H
616	1H	✱	A70-1020-05	REMOTE CONTROLLER ASSY(RC-F3)		
620	3G	✱	B10-2100-13	FRONT GLASS (A DECK)		1
620	3G	✱	B10-2111-13	FRONT GLASS (A DECK)		H
621	3G	✱	B10-2101-13	FRONT GLASS (B DECK)		1
621	3G	✱	B10-2112-13	FRONT GLASS (B DECK)		H
622	2G	✱	B10-2117-22	FRONT GLASS (RECEIVER)		H
622	2G	✱	B10-2139-22	FRONT GLASS (RECEIVER)		1
-			B46-0121-33	WARRANTY CARD	P	
-		✱	B46-0307-23	WARRANTY CARD	K	
-			B58-0964-13	CAUTION CARD (UL)	KR	
-		✱	B58-0967-03	CAUTION CARD (PL)	P	
-		✱	B58-0970-13	CAUTION CARD (PL)	R	
-		✱	B60-2179-00	INSTRUCTION MANUAL (ENGLISH)	KRP	
-		✱	B60-2180-00	INSTRUCTION MANUAL (FRENCH)	P	
-		✱	B60-2181-00	INSTRUCTION MANUAL (SPANISH)	R	
625	3H	✱	D39-0322-05	DAMPER		
⚠ 632	1J		E30-2787-05	AC POWER CORD		
635	1J,2I	✱	E35-1174-05	FLAT CABLE		
637	1J	✱	F07-0757-03	COVER		
639	1J	✱	F20-1432-04	INSULATING SHEET		
641	2H	✱	G01-3810-24	TORSION COIL SPRING		
642	3H	✱	G01-3811-24	TORSION COIL SPRING		
643	3G		G02-1057-14	FLAT SPRING		
645	1J	✱	G11-2239-14	CUSHION		
-		✱	H10-7047-12	POLYSTYRENE FOAMED FIXTURE		
-		✱	H10-7048-12	POLYSTYRENE FOAMED FIXTURE		
-			H13-0086-04	CARTON BOARD		
-			H25-0632-24	PROTECTION BAG		
-			H25-1536-04	PROTECTION BAG		
-		✱	H50-1549-04	ITEM CARTON CASE		H
-		✱	H50-1561-04	ITEM CARTON CASE		W
-		✱	H50-1568-04	ITEM CARTON CASE		S
648	1G		J19-3645-05	AM LOOP ANNTENA STAND		
⚠ 660	1J		J42-0083-05	POWER CORD BUSHING		
-			J61-0307-05	WIRE BAND		
661	3G		K29-6033-04	KNOB (MIC MIXING)		
662	2H	✱	K29-6135-02	KNOB (DUBB.,REC,ARM)		1
662	2H	✱	K29-6138-02	KNOB (DUBB.,REC,ARM)		H
663	2H	✱	K29-6121-12	KNOB (TUNING,P.CALL)		1
663	2H	✱	K29-6139-12	KNOB (TUNING,P.CALL)		H
664	2G	✱	K29-6122-13	KNOB (DISC SELECTOR)		1

L:Scandinavia **K:** USA **P:** Canada **W:** MALAYSIA made **H:** HUIZHOU made
Y: PX(Far East, Hawaii) **T:** England **E:**Europe **S:** SINGAPORE made
Y:AAFES(Europe) **X:** Australia **M:** Other Areas
1: *SINGAPORE, MALAYSIA made common* ⚠ indicates safety critical components.

✱ New Parts
Parts without **Parts No.** are not supplied.
Les articles non mentionnes dans le **Parts No.** ne sont pas fournis.
Teile ohne **Parts No.** werden nicht geliefert.

NO. 6

Ref. No.	Address	New Parts	Parts No.	Description	Destination	Remarks
664	2G	✱	K29-6140-13	KNOB (DISC SELECTOR)		H
665	2H	✱	K29-6123-13	KNOB (INPUT SELECTOR)		1
665	2H	✱	K29-6141-13	KNOB (INPUT SELECTOR)		H
666	3G	✱	K29-6124-14	KNOB (EJECT A)		1
666	3G	✱	K29-6142-14	KNOB (EJECT A)		H
667	3H	✱	K29-6125-14	KNOB (EJECT B)		1
667	3H	✱	K29-6143-14	KNOB (EJECT B)		H
668	2G	✱	K29-6149-14	KNOB (VOLUME CONTROL)		
⚠ 670	3J	✱	L07-1944-05	POWER TRANSFORMER		
B			N09-2900-08	BINDING HEAD TAPTITE SCREW		
673	1H		T90-0801-05	LEAD WIRE ANTENNA		
674	1G		T90-0195-05	LOOP ANTENNA		
RXD-F42						
601	1G	✱	A01-3229-11	METALLIC CABINET		
603	1H		A09-0170-08	BATTERY COVER		
606	2G	✱	A21-1870-32	DRESSING PANEL (CD)		1
607	2G	✱	A29-0395-12	PANEL (CD TRAY)		
608	3G		A53-1468-03	CASSETTE HOLDER ASSY (A DECK)		1
610	3G		A53-1470-03	CASSETTE HOLDER ASSY (B DECK)		1
612	3G	✱	A53-1862-02	CASSETTE LID(A DECK)		1
613	3G	✱	A53-1864-02	CASSETTE LID(B DECK)		1
615	2G	✱	A60-0720-21	PANEL		1
616	1H	✱	A70-1020-05	REMOTE CONTROLLER ASSY(RC-F3)		
620	3G	✱	B10-2100-13	FRONT GLASS (A DECK)		1
621	3G	✱	B10-2101-13	FRONT GLASS (B DECK)		1
622	2G	✱	B10-2102-12	FRONT GLASS (RECEIVER)		1
-		✱	B58-0966-13	CAUTION CARD (ELM)		
-		✱	B60-2144-00	INSTRUCTION MANUAL(ENGLISH)		
-		✱	B60-2152-10	INSTRUCTION MANUAL(CHINESE)		
-		✱	B60-2153-10	INSTRUCTION MANUAL (TAIWANESE)	M	
625	3H	✱	D39-0321-05	DAMPER		
⚠ 630	1H		E03-0115-05	AC PLUG ADAPTER		
⚠ 632	1J		E30-2592-15	AC POWER CORD		
635	1J,2I	✱	E35-1129-05	FLAT CABLE (33PIN)		
637	1J	✱	F07-0757-03	COVER		
639	1J	✱	F20-1431-04	INSULATING SHEET		
640	2J	✱	F20-1448-03	INSULATING SHEET		
641	2H	✱	G01-3766-24	TORSION COIL SPRING		
642	3H	✱	G01-3767-24	TORSION COIL SPRING		
643	3G		G02-1040-04	FLAT SPRING		
-		✱	H10-7017-12	POLYSTYRENE FOAMED FIXTURE		
-		✱	H10-7018-12	POLYSTYRENE FOAMED FIXTURE		
-			H13-0086-04	CARTON BOARD		
-			H25-0632-24	PROTECTION BAG		
-			H25-1509-04	PROTECTION BAG		
-		✱	H50-1495-04	ITEM CARTON CASE	M	
-		✱	H50-1651-04	ITEM CARTON CASE	1	
647	1J		J19-2808-05	HOLDER		
648	1G		J19-3645-05	AM LOOP ANNTENA STAND		
⚠ 660	1J		J42-0083-05	POWER CORD BUSHING		

L:Scandinavia **K:** USA **P:** Canada **I:** Malaysia
Y: PX(Far East, Hawaii) **T:** England **E:**Europe **H:** HUIZHOU made
Y:AAFES(Europe) **X:** Australia **M:** Other Areas
1: SINGAPORE,MALAYSIA made common ⚠ indicates safety critical components.

RXD-F3/F4/F41/F42

PARTS LIST

✱ New Parts
Parts without **Parts No.** are not supplied.
Les articles non mentionnes dans le **Parts No.** ne sont pas fournis.
Teile ohne **Parts No.** werden nicht geliefert.

NO. 7

Ref. No.	Add-ress	New Parts	Parts No.	Description	Desti-nation	Re-marks
-			J61-0307-05	WIRE BAND		
661	3G			K29-6033-04 KNOB (MIC MIXING)		
662	2H	✱	K29-6120-02	KNOB (DUBB.,REC,ARM)		1
663	2H	✱	K29-6121-12	KNOB (TUNING,P.CALL)		1
664	2G	✱	K29-6122-13	KNOB (DISC SELECTOR)		1
665	2H	✱	K29-6123-13	KNOB (INPUT SELECTOR)		1
666	3G	✱	K29-6124-14	KNOB (EJECT A)		1
667	3H	✱	K29-6125-14	KNOB (EJECT B)		1
668	2G	✱	K29-6149-14	KNOB (VOLUME CONTROL)		
⚠ 670	3J	✱	L07-1932-05	POWER TRANSFORMER		
B			N09-2900-08	BINDING HEAD TAPTITE SCREW		
673	1H		T90-0182-15	LEAD WIRE ANTENNA		
673	1H		T90-0801-05	LEAD WIRE ANTENNA		
674	1G		T90-0195-05	LOOP ANTENNA		
SURROUND UNIT (X08-267X-XX): RXD-F4/F4L/F42						
C1 ,2			CE04LW1H010M	ELECTRO 1.0UF 50WV		
C3 ,4			CE04LW1V100M	ELECTRO 10UF 35WV		
C5			CF92FV1H394J	MF-C 0.39UF J		
C7			CK45FF1H103Z	CERAMIC 0.010UF Z		
C8			CE04LW1H2R2M	ELECTRO 2.2UF 50WV		
C9 ,10			CE04LW1H010M	ELECTRO 1.0UF 50WV		
C13 ,14			CE04LW1V4R7M	ELECTRO 4.7UF 35WV		
C15 ,16			CC45FSL1H470J	CERAMIC 47PF J		
C19 ,20			CE04LW1V4R7M	ELECTRO 4.7UF 35WV		
C21 ,22			CK45FB1H102K	CERAMIC 1000PF K		
C23 ,24			CE04LW1V220M	ELECTRO 22UF 35WV		
C25 ,26			CK45FB1H222K	CERAMIC 2200PF K		
C27			CQ93FMG1H104J	MYLAR 0.10UF J	YMXTEG	
C28			CE04LW1E471M	ELECTRO 470UF 25WV		
C31 ,32			CQ93FMG1H104J	MYLAR 0.10UF J		
C35 ,36			CK45FF1H472Z	CERAMIC 4700PF Z	KRP	
C35 ,36			CQ93FMG1H822J	MYLAR 8200PF J	YMXTEG	
C37			CQ93FMG1H104J	MYLAR 0.10UF J		
C38			CE04LW1C221M	ELECTRO 220UF 16WV		
C39			CQ93FMG1H333J	MYLAR 0.033UF J		
C40			CQ93FMG1H152J	MYLAR 1500PF J		
C41			CQ93FMG1H333J	MYLAR 0.033UF J		
C42			CE04LW1C221M	ELECTRO 220UF 16WV		
C43			CK45FF1H103Z	CERAMIC 0.010UF Z		
C44			CE04LW1V100M	ELECTRO 10UF 35WV		
C45			CQ93FMG1H103J	MYLAR 0.010UF J		
C46 -48			CC45FSL1H101J	CERAMIC 100PF J		
C49			CQ93FMG1H681J	MYLAR 680PF J		
C50			CF92FV1H474J	MF-C 0.47U J		
C51			CE04LW1C470M	ELECTRO 47UF 16WV		
C52 ,53			CQ93FMG1H104J	MYLAR 0.10UF J		
C54			CE04LW1HR47M	ELECTRO 0.47UF 50WV		
C55			CE04LW1V4R7M	ELECTRO 4.7UF 35WV		
C56			CE04LW1HR47M	ELECTRO 0.47UF 50WV		
C57			CE04LW1V4R7M	ELECTRO 4.7UF 35WV		
C58			CF92FV1H154J	MF-C 0.15UF J		
C59			CE04LW1H3R3M	ELECTRO 3.3UF 50WV		

L:Scandinavia **K:** USA **P:** Canada **1:** SINGAPORE, MALAYSIA made common
Y: PX(Far East, Hawaii) **T:** England **E:**Europe
Y:AAFES(Europe) **X:** Australia **M:** Other Areas

⚠ indicates safety critical components.

✱ New Parts
Parts without **Parts No.** are not supplied.
Les articles non mentionnes dans le **Parts No.** ne sont pas fournis.
Teile ohne **Parts No.** werden nicht geliefert.

NO. 8

Ref. No.	Add-ress	New Parts	Parts No.	Description	Desti-nation	Re-marks
C60 ,61			CF92FV1H154J	MF-C 0.15UF J		
C62			CE04LW1H3R3M	ELECTRO 3.3UF 50WV		
C63			CF92FV1H154J	MF-C 0.15UF J		
C64			CE04LW1V4R7M	ELECTRO 4.7UF 35WV		
C65			CE04LW1HR47M	ELECTRO 0.47UF 50WV		
C66			CE04LW1V4R7M	ELECTRO 4.7UF 35WV		
C67			CE04LW1HR47M	ELECTRO 0.47UF 50WV		
C68 ,69			CQ93FMG1H104J	MYLAR 0.10UF J		
C70			CE04LW1C221M	ELECTRO 220UF 16WV		
C71 -74			CE04LW1V100M	ELECTRO 10UF 35WV		
C75			CE04LW1C221M	ELECTRO 220UF 16WV		
C76			CQ93FMG1H473J	MYLAR 0.047UF J		
C77			CQ93FMG1H223J	MYLAR 0.022UF J		
C78			CE04KW1E472M	ELECTRO 4700UF 25WV		
C79			CE04LW1E332M	ELECTRO 3300UF 25WV		
C80			CF92FV1H105J	MF-C 1.0UF J		
C81			CE04LW1V100M	ELECTRO 10UF 35WV		
C83			CE04LW1C101M	ELECTRO 100UF 16WV		
C84 ,85			CE04LW1V4R7M	ELECTRO 4.7UF 35WV		
C94 ,95			CC45FSL1H101J	CERAMIC 100PF J		
C96			CE04LW1C220M	ELECTRO 22UF 16WV		
C97 -100			CE04LW1V4R7M	ELECTRO 4.7UF 35WV		
C101			CE04LW1C470M	ELECTRO 47UF 16WV		
C102			CE04HW1H2R2M	NP-ELEC 2.2UF 50WV		
C103,104			CK45FF1H103Z	CERAMIC 0.010UF Z		
C105,106			CE04LW1C470M	ELECTRO 47UF16W V		
C107			CK45FF1H103Z	CERAMIC 0.010UF Z		
J1			E70-0046-05	LOCK TERMINAL BOARD		
		✱	F01-2098-03	HEAT SINK	YMXTEG	
		✱	F01-2111-03	HEAT SINK	KRP	
			F20-1339-05	INSULATING BOARD		
			F29-0112-05	INSULATING WASHER		
⚠ F8 ,9			F05-1623-05	FUSE (SEMKO) (250V T1.6AL)	YMXTEG	
⚠ F8 ,9			F06-2525-05	FUSE (UL) (250V 2.5A)	KRP	
CN3 -6			J13-0075-05	FUSE CLIP		
X1			L78-0290-05	RESONATOR (8MHz)		
⚠ R8			RD14NB2E2R2J	RD 2.2 J 1/4W		
R9			RN14BK2C3902F	RN 39.0K F 1/6W		
R33 ,34			RS14KB3A4R7J	FL-PROOF RS 4.7 J 1W		
⚠ R46			RD14NB2E470J	RD 47 J 1/4W		
⚠ R55			RD14NB2E182J	RD 1.8K J 1/4W		
⚠ K2			S51-2094-05	MAGNETIC RELAY	KRP	
⚠ K2			S76-0008-05	MAGNETIC RELAY	YMXTEG	
D1			HZS10N(B)	ZENER DIODE		
D1			RD10ES(B)	ZENER DIODE		
D3 ,4			HSS104A	DIODE		
D3 ,4			1SS131	DIODE		
⚠ D5			D3SBA20F03	DIODE	KRP	
⚠ D5			KBP02ML-6127	DIODE	YMXTEG	
⚠ D5			RBV-402LFA	DIODE	KRP	
D6			HZS3.9N(B2)	ZENER DIODE		

L:Scandinavia **K:** USA **P:** Canada **1:** RXD-F41 **2:** RXD-F42
Y: PX(Far East, Hawaii) **T:** England **E:**Europe **3:** RXD-F3 **4:** RXD-F4
Y:AAFES(Europe) **X:** Australia **M:** Other Areas

⚠ indicates safety critical components.

✱ New Parts
Parts without **Parts No.** are not supplied.
Les articles non mentionnes dans le **Parts No.** ne sont pas fournis.
Teile ohne **Parts No.** werden nicht geliefert.

NO. 9

Ref. No.	Add-ress	New Parts	Parts No.	Description	Desti-nation	Re-marks
D6			RD3.9ES(B2)	ZENER DIODE		
D6			UZ-3.9BSB	ZENER DIODE		
D7			HZS6.2N(B2)	ZENER DIODE		
D7			RD6.2ES(B2)	ZENER DIODE		
D7			UZ-6.2BSB	ZENER DIODE		
D8			HSS104A	DIODE		
D8			1SS131	DIODE		
IC1			LA2785	IC(DOLBY PRO LOGIC DECODER IC)		
IC2			LV1011	DI BI-POLAR IC		
IC3			NJM4565L-D	IC(OP AMP X2)		
IC4		✱	TDA7315	ANALOGUE IC		
⚠ IC5 ,6		✱	TDA2040V	ANALOGUE IC	YMXTEG	
⚠ IC5 ,6			TDA2050V	ANALOGUE IC		
IC7			XRU4052BC	MOS-IC		
Q1 ,2			2SC2878(B)	TRANSISTOR		
⚠ Q4			2SD2012	TRANSISTOR		
⚠ Q4			2SD2061	TRANSISTOR		
Q5			2SC2003(L,K)	TRANSISTOR		
Q6			DTA113ZS	DIGITAL TRANSISTOR		
Q6			UN4119	TRANSISTOR		
AUDIO UNIT- TUNER (X09) : K. R. P. Y. M. X type						
Q7			DTC124ES	DIGITAL TRANSISTOR		
Q7			UN4212	TRANSISTOR		
C301,302			CK73FB1H103K	CHIP C 0.010UF K		
C304			CE04LW1A470M	ELECTRO 47UF 10WV		
C305			CK73FB1H103K	CHIP C 0.010UF K		
C308			CK73FB1H103K	CHIP C 0.010UF K		
C310			CC73FSL1H102J	CHIP C 1000PF J		
C311			CE04LW1H4R7M	ELECTRO 4.7UF 50WV		
C313			CE04LW1H010M	ELECTRO 1.0UF 50WV		
C314			CE04LW1H2R2M	ELECTRO 2.2UF 50WV		
C321,322			CQ93FMG1H163J	MYLAR 0.016UF J	MX	3
C321,322			CQ93FMG1H163J	MYLAR 0.016UF J	YMX	4
C321,322			CQ93FMG1H163J	MYLAR 0.016UF J	M	2
C321,322			CQ93FMG1H243J	MYLAR 0.024UF J	KRP	3
C321,322			CQ93FMG1H243J	MYLAR 0.024UF J	KRP	4
C321,322			CQ93FMG1H243J	MYLAR 0.024UF J	KRP	1
C323			CE04LW1H010M	ELECTRO 1.0UF 50WV		
C324			CE04LW1H3R3M	ELECTRO 3.3UF 50WV		
C325			CE04LW1V100M	ELECTRO 10UF 35WV		
C327			CK73FB1E473K	CHIP C 0.047UF K		
C328			CE04LW1V100M	ELECTRO 10UF 35WV		
C331			CE04LW1A470M	ELECTRO 47UF 10WV		
C332			CK45FF1H103Z	CERAMIC 0.010UF Z		
C333			CC73FCH1H270J	CHIP C 27PF J		
C334			CC73FCH1H220J	CHIP C 22PF J		
C335-338			CK73FB1H471K	CHIP C 470PF K		
C339			CE04LW1C470M	ELECTRO 47UF 16WV		
C340			CK73FB1H223K	CHIP C 0.022UF K		
C341			CE04LW1H010M	ELECTRO 1.0UF 50WV		
C342,343			CK73FB1H103K	CHIP C 0.010UF K		
C350			C91-0769-05	CERAMIC 0.010UF K		
C351			CE04LW1H010M	ELECTRO 1.0UF 50WV		
C352			CE04LW1C470M	ELECTRO 47UF 16WV		

L:Scandinavia **K:** USA **P:** Canada **1:** RXD-F41 **2:** RXD-F42
Y: PX(Far East, Hawaii) **T:** England **E:**Europe **3:** RXD-F3 **4:** RXD-F4
Y:AAFES(Europe) **X:** Australia **M:** Other Areas

⚠ indicates safety critical components.

✱ New Parts
Parts without **Parts No.** are not supplied.
Les articles non mentionnes dans le **Parts No.** ne sont pas fournis.
Teile ohne **Parts No.** werden nicht geliefert.

NO. 10

Ref. No.	Add-ress	New Parts	Parts No.	Description	Desti-nation	Re-marks
C355			CK73FB1E104K	CHIP C 0.10UF K		
C357			CC73FSL1H220J	CHIP C 22PF J		
C361			CK73FB1H103K	CHIP C 0.010UF K		
C362			CE04LW1C101M	ELECTRO 100UF 16WV		
C365			CE04LW1H010M	ELECTRO 1.0UF 50WV		
C366			CC73FSL1H102J	CHIP C 1000PF J		
C371			CE04LW1V100M	ELECTRO 10UF 35WV		
C372			CE04LW1C470M	ELECTRO 47UF 16WV		
C403-406			CE04LW1HR47M	ELECTRO 0.47UF 50WV		
C407			CK73FB1E473K	CHIP C 0.047UF K		
C412			CC73FSL1H101J	CHIP C 100PF J		
C414			CK73FB1H681K	CHIP C 680PF K		
C417			CK73FB1H681K	CHIP C 680PF K		
C418			CK73FB1H103K	CHIP C 0.010UF K		
C419			CC73FSL1H101J	CHIP C 100PF J		
C421,422			CE04LW1C470M	ELECTRO 47UF 16WV		
C423			CC45FSL1H101J	CERAMIC 100PF J		
C424			CC73FSL1H102J	CHIP C 1000PF J		
C435,436			CQ93FMG1H682J	MYLAR 6800PF J	M	3
C435,436			CQ93FMG1H682J	MYLAR 6800PF J	YM	4
C435,436			CQ93FMG1H682J	MYLAR 6800PF J	M	2
C482			CC73FSL1H150J	CHIP C 15PF J		
J301			E20-0476-05	LOCK TERMINAL BOARD		
KRPMX	3					
J301			E20-0476-05	LOCK TERMINAL BOARD(4P)	KRPYMX	4
J301			E20-0476-05	LOCK TERMINAL BOARD(4P)	M	2
J301			E70-0051-05	LOCK TERMINAL BOARD		
1						
CF301,302			L72-0531-05	CERAMIC FILTER		
CF303			L72-0574-05	CERAMIC FILTER		
L310			L40-1091-17	SMALL FIXED INDUCTOR(1UH)		
L311			L40-1021-14	SMALL FIXED INDUCTOR(1.0MH,K)		
L312			L40-1091-17	SMALL FIXED INDUCTOR(1UH)		
L403			L39-1328-05	COMBINATION COIL	KRPMX	3
L403			L39-1328-05	COMBINATION COIL		1
L403		✱	L39-1335-05	COMBINATION COIL	KRPYMX	4
L403		✱	L39-1335-05	COMBINATION COIL	M	2
L406			L40-1091-17	SMALL FIXED INDUCTOR(1UH)		
X301			L77-1122-05	CRYSTAL RESONATOR(7.2MHz)	KRPYMX	4
X301			L77-1122-05	CRYSTAL RESONATOR(7.2MHz)	M	2
X301		✱	L77-2148-05	CRYSTAL RESONATOR(7.2MHz)	KRPMX	3
X301		✱	L77-2148-05	CRYSTAL RESONATOR(7.2MHz)		1
X302			L78-0295-05	RESONATOR (456KHz)		
R301			RK73FB2A681J	CHIP R 680 J 1/10W		
R302			RK73FB2A332J	CHIP R 3.3K J 1/10W		
R303			RK73FB2A331J	CHIP R 330 J 1/10W		
R304			RK73FB2A470J	CHIP R 47 J 1/10W		
R306			RK73FB2A331J	CHIP R		
⚠ R311			RD14NB2E101J	RD 100 J 1/4W		
R315			RK73FB2A391J	CHIP R 390 J 1/10W		
R319			RK73FB2A332J	CHIP R 3.3K J 1/10W		
R321,322			RK73FB2A393J	CHIP R 39K J 1/10W		
R331			RS14KB3D221J	FL-PROOF RS 220 J 2W		
R336,337			RK73FB2A102J	CHIP R 1.0K J 1/10W		
R338			RK73FB2A221J	CHIP R 220 J 1/10W		
R339			RK73FB2A822J	CHIP R 8.2K J 1/10W		

L:Scandinavia **K:** USA **P:** Canada **1:** RXD-F41 **2:** RXD-F42
Y: PX(Far East, Hawaii) **T:** England **E:**Europe **3:** RXD-F3 **4:** RXD-F4
Y:AAFES(Europe) **X:** Australia **M:** Other Areas

⚠ indicates safety critical components.

RXD-F3/F4/F41/F42

PARTS LIST

✱ New Parts
Parts without **Parts No.** are not supplied.
Les articles non mentionnes dans le **Parts No.** ne sont pas fournis.
Teile ohne **Parts No.** werden nicht geliefert.

NO. 11

Ref. No.	Address	New Parts	Parts No.	Description	Destination	Remarks
R340			RK73FB2A102J	CHIP R 1.0K J 1/10W		
⚠ R342			RD14NB2E101J	RD 100 J 1/4W		
R343			RK73FB2A103J	CHIP R 10K J 1/10W		
R352			RK73FB2A472J	CHIP R 4.7K J 1/10W		
R364			RK73FB2A104J	CHIP R 100K J 1/10W		
R401,402			RK73FB2A333J	CHIP R 33K J 1/10W		
R405,406			RK73FB2A123J	CHIP R 12K J 1/10W		
⚠ R411			RD14NB2E331J	RD 330 J 1/4W		H
⚠ R411			RD14NB2E331J	RD 330 J 1/4W		1
⚠ R411			RD14NB2E470J	RD 47 J 1/4W		S
R418			RK73FB2A122J	CHIP R 1.2K J 1/10W		
R419			RK73FB2A123J	CHIP R 12K J 1/10W		
R422			RK73FB2A122J	CHIP R 1.2K J 1/10W		
R423			RK73FB2A123J	CHIP R 12K J 1/10W		
R424			RK73FB2A103J	CHIP R 10K J 1/10W		
R425,426			RK73FB2A332J	CHIP R 3.3K J 1/10W		
⚠ R427,428			RD14NB2E101J	RD 100 J 1/4W		
R431,432			RK73FB2A393J	CHIP R 39K J 1/10W		
R438,439			RK73FB2A561J	CHIP R 560 J 1/10W	M	3
R438,439			RK73FB2A561J	CHIP R 560 J 1/10W	YM	4
R438,439			RK73FB2A561J	CHIP R 560 J 1/10W	M	2
R440,441			RK73FB2A473J	CHIP R 47K J 1/10W	M	3
R440,441			RK73FB2A473J	CHIP R 47K J 1/10W	YM	4
R440,441			RK73FB2A473J	CHIP R 47K J 1/10W	M	2
R451			RK73FB2A911J	CHIP R 910 J 1/10W		
R452			RK73FB2A473J	CHIP R 47K J 1/10W		
R453			RK73FB2A472J	CHIP R 4.7K J 1/10W		
R457			RK73FB2A102J	CHIP R 1.0K J 1/10W		
R467			RK73FB2A104J	CHIP R 100K J 1/10W		
W401,402			R92-0679-05	CHIP R 0 OHM	KRPMX	3
W401,402			R92-0679-05	CHIP R 0 OHM		1
W403			R92-0670-05	CHIP R 0 OHM		
W404,405			R92-0679-05	CHIP R 0 OHM		
W406			R92-0670-05	CHIP R 0 OHM		
W407			R92-0679-05	CHIP R 0 OHM		
W408			R92-0670-05	CHIP R 0 OHM		
W409			R92-0679-05	CHIP R 0 OHM		
W410			R92-0670-05	CHIP R 0 OHM		
W411			R92-0679-05	CHIP R 0 OHM		
W412			R92-0670-05	CHIP R 0 OHM	MX	3
W412			R92-0670-05	CHIP R 0 OHM	KRPYMX	4
W412			R92-0670-05	CHIP R 0 OHM	M	2
W412-414			R92-0670-05	CHIP R 0 OHM	KRP	3
W412-414			R92-0670-05	CHIP R 0 OHM		1
W501-504			R92-0670-05	CHIP R 0 OHM		
S301			S62-0034-05	SLIDE SWITCH	M	3
S301			S62-0034-05	SLIDE SWITCH	YM	4
S301			S62-0034-05	SLIDE SWITCH	M	2
D303			HZS5.1N(B2)	ZENER DIODE		
D303			RD5.1ES(B2)	ZENER DIODE		
D303			UZ-5.1BSB	ZENER DIODE		
D304			HZS3.3N(B2)	ZENER DIODE		
D304			RD3.3ES(B2)	ZENER DIODE		
D304			UZ-3.3BSB	ZENER DIODE		

L:Scandinavia **K:** USA **P:** Canada **1:** RXD-F41 **2:** RXD-F42
Y: PX(Far East, Hawaii) **T:** England **E:**Europe **3:** RXD-F3 **4:** RXD-F4
Y:AAFES(Europe) **X:** Australia **M:** Other Areas **H:** HUIZHOU made
S: SINGAPORE made ⚠ indicates safety critical components.

✱ New Parts
Parts without **Parts No.** are not supplied.
Les articles non mentionnes dans le **Parts No.** ne sont pas fournis.
Teile ohne **Parts No.** werden nicht geliefert.

NO. 12

PRef. No.	Address	New Parts	Parts No.	Description	Destination	Remarks
D307,308			HSS104	DIODE		
D307,308			1SS133	DIODE		
D311			HZS5.6N(B2)	ZENER DIODE		
D311			RD5.6ES(B2)	ZENER DIODE		
D311			UZ-5.6BSB	ZENER DIODE		
D411,412			HSS104	DIODE		
D411,412			1SS133	DIODE		
IC301			LA1831A-KEN	ANALOGUE IC		
IC302			LC7218	IC(PLL FREQUENCY SYNTHESIZER)		
IC312			NJM4565D	IC(OP AMP X2)		
Q301			2SC2714(R,O)	TRANSISTOR		
Q302			2SC1845(F,E)	TRANSISTOR		
Q303			2SC1740S(Q,R)	TRANSISTOR		
Q303			2SC2458(Y,GR)	TRANSISTOR		
Q303			2SC2785(F,E)	TRANSISTOR		
Q303			2SC3311A(Q,R)	TRANSISTOR		
Q307			2SC2412K	TRANSISTOR		
Q311			2SD863(E,F)	TRANSISTOR		
Q402			2SA1037K	TRANSISTOR		
Q404			2SA1037K	TRANSISTOR		
Q407,408			2SC2412K	TRANSISTOR	M3	
Q407,408			2SC2412K	TRANSISTOR	YM	4
Q407,408			2SC2412K	TRANSISTOR	M	2
Q409,410			2SD1757K	TRANSISTOR		
Q411			2SA1037K	TRANSISTOR		
A301			W02-1190-05	FM FRONT-END ASSY	KRPYMX	4
A301			W02-1190-05	FM FRONT-END ASSY	M	2
A301		✱	W02-2520-05	FM FRONT-END ASSY	KRPMX	3
A301		✱	W02-2520-05	FM FRONT-END ASSY		1
AUDIO UNIT - TUNER (X09-) : T.E.G. type						
C301,302			CK73FB1H103K	CHIP C 0.010UF K		
C303			CE04LW1V100M	ELECTRO 10UF 35WV		
C304			CK73FB1E473K	CHIP C 0.047UF K		
C305			CE04LW1V100M	ELECTRO 10UF 35WV		
C306			CK73FB1E473K	CHIP C 0.047UF K		
C307			CE04LW1V100M	ELECTRO 10UF 35WV		
C308			CE04LW1H010M	ELECTRO 1.0UF 50WV		
C309			CE04LW1HR47M	ELECTRO 0.47UF 50WV		
C310			CE04LW1H2R2M	ELECTRO 2.2UF 50WV		
C311			CE04LW1HR47M	ELECTRO 0.47UF 50WV		
C312			CK73FB1E473K	CHIP C 0.047UF K		
C313			CC73FCH1H220J	CHIP C 22PF J		
C314			CE04LW1A101M	ELECTRO 100UF 10WV		
C315			CK73FB1H472K	CHIP C 4700PF K		
C316			CE04LW1H010M	ELECTRO 1.0UF 50WV		
C317,318			CE04LW1V100M	ELECTRO 10UF 35WV		
C319,320			CQ93FMG1H223J	MYLAR 0.022UF J		
C322			CK73FB1H102K	CHIP C 1000PF K		
C323,324			CE04LW1H2R2M	ELECTRO 2.2UF 50WV		
C325,326			CK45FB1H471K	CERAMIC 470PF K		
C327			CK73FB1E473K	CHIP C 0.047UF K		
C328			CC45FSL1H150J	CERAMIC 15PF J		
C330			CE04LW1C470M	ELECTRO 47UF 16WV		
C331			CK45FF1H473Z	CERAMIC 0.047UF Z		
C332			CK73FB1H103K	CHIP C 0.010UF K		

L:Scandinavia **K:** USA **P:** Canada **1:** RXD-F41 **2:** RXD-F42
Y: PX(Far East, Hawaii) **T:** England **E:**Europe **3:** RXD-F3 **4:** RXD-F4
Y:AAFES(Europe) **X:** Australia **M:** Other Areas
⚠ indicates safety critical components.

RXD-F3/F4/F41/F42

PARTS LIST

* New Parts
Parts without **Parts No.** are not supplied.
Les articles non mentionnes dans le **Parts No.** ne sont pas fournis.
Teile ohne **Parts No.** werden nicht geliefert.

NO. 13

Ref. No.	Add-ress	New Parts	Parts No.	Description	Desti-nation	Re-marks
C333			CC73FCH1H270J	CHIP C 27PF J		
C334			CC73FCH1H220J	CHIP C 22PF J		
C335-338			CK73FB1H471K	CHIP C 470PF K		
C339			CE04LW1C470M	ELECTRO 47UF 16WV		
C340			CQ93FMG1H223J	MYLAR 0.022UF J		
C341			CE04LW1H2R2M	ELECTRO 2.2UF 50WV		
C342,343			CK73FB1H103K	CHIP C 0.010UFK		
C344			CE04LW1A470M	ELECTRO 47UF 10WV		
C345			CE04LW1C470M	ELECTRO 47UF 16WV		
C346			CE04LW1H010M	ELECTRO 1.0UF 50WV		
C347			CK73FB1H103K	CHIPC 0.010UFK		
C348			CE04LW1H010M	ELECTRO 1.0UF 50WV		
C349			CK73FB1H103K	CHIPC 0.010UFK		
C354			CE04LW1C470M	ELECTRO 47UF 16WV		
C356			CC73FCH1H060D	CHIPC 6.0PF D		
C357			CC73FCH1H220J	CHIPC 22PF J		
C358			CK73FB1E473K	CHIPC 0.047UFK		
C359			CK45FF1H103Z	CERAMIC 0.010UFZ		
C360			CC73FSL1H101J	CHIPC 100PF J		
C361			C91-0745-05	CERAMIC 100PF K		
C362			CC45FSL1H020C	CERAMIC 2.0PF C		H
C362			CC45FSL1H030C	CERAMIC 3.0PF C		S
C363			CK73FB1H103K	CHIPC 0.010UFK		
C364			CC45FSL1H101J	CERAMIC 100PF J		
C365			CK73FB1H103K	CHIPC 0.010UFK		
J301			E20-0321-05	LOCKTERMINALBOARD		
CF301,302			L72-0536-05	CERAMICFILTER		
L303			L30-0910-05	FMIFT		
L306			L39-1325-05	COMBINATIONCOIL	T	H 3
L306			L39-1328-05	COMBINATIONCOIL	EG	H 3
L306		*	L39-1335-05	COMBINATIONCOIL	EG	S
L306		*	L39-1336-05	COMBINATIONCOIL	T	S
L307			L30-0911-05	AMIFT		
L308,309			L40-1091-17	SMALLFIXEDINDUCTOR		
L311			L40-1001-17	SMALLFIXEDINDUCTOR(10UH,K)		
X301			L77-1122-05	CRYSTALRESONATOR(7.2MHz)		4
X301			L77-1122-05	CRYSTALRESONATOR(7.2MHz)		S 3
X301		*	L77-2148-05	CRYSTALRESONATOR(7.2MHz)		H 3
X302			L78-0295-05	RESONATOR (456kHz)		
R301			RK73FB2A681J	CHIPR 680 J1/10W		
R302			RK73FB2A332J	CHIPR 3.3K J1/10W		
R303			RK73FB2A331J	CHIPR 330 J1/10W		
R304			RK73FB2A100J	CHIPR 10 J1/10W		
R306			RK73FB2A331J	CHIPR 330 J1/10W		
R307			RK73FB2A392J	CHIPR 3.9K J1/10W		
R311			RK73FB2A562J	CHIPR 5.6K J1/10W		
R312			RK73FB2A302J	CHIPR 3.0K J1/10W		
R313			RK73FB2A333J	CHIPR 33K J1/10W		
R316			RK73FB2A104J	CHIPR 100K J1/10W		
R317			RK73FB2A392J	CHIPR 3.9K J1/10W		
R318			RK73FB2A333J	CHIPR 33K J1/10W		
R331			RK73FB2A822J	CHIPR 8.2K J1/10W		
R336,337			RK73FB2A102J	CHIPR 1.0K J1/10W		
R340			RK73FB2A471J	CHIPR 470 J1/10W		

L:Scandinavia **K:** USA **P:** Canada **1:** RXD-F41 **2:** RXD-F42
Y: PX(Far East, Hawaii) **T:** England **E:**Europe **3:** RXD-F3 **4:** RXD-F4
Y:AAFES(Europe) **X:** Australia **M:** Other Areas **H:** HUIZHOU made
S: SINGAPORE made ⚠ indicates safety critical components.

* New Parts
Parts without **Parts No.** are not supplied.
Les articles non mentionnes dans le **Parts No.** ne sont pas fournis.
Teile ohne **Parts No.** werden nicht geliefert.

NO. 14

Ref. No.	Add-ress	New Parts	Parts No.	Description	Desti-nation	Re-marks
⚠ R342			RD14NB2E101J	RD 100 J 1/4W		
R343			RK73FB2A103J	CHIP R 10K J 1/10W		
R358			RK73FB2A104J	CHIP R 100K J 1/10W		
R359			RK73FB2A122J	CHIP R 1.2K J 1/10W	T	
R360			RK73FB2A123J	CHIP R 12K J 1/10W	T	
R361			RK73FB2A122J	CHIP R 1.2K J 1/10W		
R362			RK73FB2A123J	CHIP R 12K J 1/10W		
R363			RK73FB2A122J	CHIP R 1.2K J 1/10W		
R364			RK73FB2A123J	CHIP R 12K J 1/10W		
R372			RK73FB2A122J	CHIP R 1.2K J 1/10W	T	
R373			RK73FB2A223J	CHIP R 22K J 1/10W	T	
R374			RK73FB2A123J	CHIP R 12K J 1/10W	T	
R375			RK73FB2A182J	CHIP R 1.8K J 1/10W	T	
R376			RK73FB2A104J	CHIP R 100K J 1/10W	T	
⚠ R378			RD14NB2E470J	RD 47 J 1/4W		
R379			RS14KB3D221J	FL-PROOF RS 220 J 2W		
R381			RK73FB2A563J	CHIP R 56K J 1/10W		
W401,402			R92-0679-05	CHIP R 0 OHM		
W403			R92-0670-05	CHIP R 0 OHM		
W404,405			R92-0679-05	CHIP R 0 OHM		
W406			R92-0670-05	CHIP R 0 OHM		
W407			R92-0679-05	CHIP R 0 OHM		
W408			R92-0670-05	CHIP R 0 OHM		
W409			R92-0679-05	CHIP R 0 OHM		
W410			R92-0670-05	CHIP R 0 OHM		
W411			R92-0679-05	CHIP R 0 OHM		
W412			R92-0670-05	CHIP R 0 OHM		
D301,302			HSS104	DIODE		
D301,302			1SS133	DIODE		
D303			HZS5.1N(B2)	ZENER DIODE		
D303			RD5.1ES(B2)	ZENER DIODE		
D303			UZ-5.1BSB	ZENER DIODE		4
D304			HZS8.2N(B2)	ZENER DIODE		
D304			RD8.2ES(B2)	ZENER DIODE		
D304			UZ-8.2BSB	ZENER DIODE		4
D305			HSS104	DIODE		
D305			1SS133	DIODE		
D306			HZS3.3N(B2)	ZENER DIODE		
D306			RD3.3ES(B2)	ZENER DIODE		
D306			UZ-3.3BSB	ZENER DIODE		
D310			HSS104	DIODE	T	
D310			1SS133	DIODE	T	
IC301			LA1836	ANALOGUE IC		
IC302			LC7218	IC(PLL FREQUENCY SYNTHESIZER)		
Q301			2SC2714(R,O)	TRANSISTOR		
Q302			2SC1845(F,E)	TRANSISTOR		
Q303			2SC4081(R,S)	TRANSISTOR		
Q305			2SC1740S(Q,R)	TRANSISTOR		
Q305			2SC2458(Y,GR)	TRANSISTOR		
Q305			2SC2785(F,E)	TRANSISTOR		
Q305			2SC3311A(Q,R)	TRANSISTOR		
Q306			2SA1576(R,S)	TRANSISTOR	T	
Q307,308			2SA1576(R,S)	TRANSISTOR		
Q309			2SD863(E,F)	TRANSISTOR		

L:Scandinavia **K:** USA **P:** Canada **1:** RXD-F41 **2:** RXD-F42
Y: PX(Far East, Hawaii) **T:** England **E:**Europe **3:** RXD-F3 **4:** RXD-F4
Y:AAFES(Europe) **X:** Australia **M:** Other Areas ⚠ indicates safety critical components.

RXD-F3/F4/F41/F42

PARTS LIST

✱ New Parts
Parts without **Parts No.** are not supplied.
Les articles non mentionnes dans le **Parts No.** ne sont pas fournis.
Teile ohne **Parts No.** werden nicht geliefert.

NO. 15

Ref. No.	Add-ress	New Parts	Parts No.	Description			Desti-nation	Re-marks
Q310			2SA1048(Y,GR)	TRANSISTOR				
Q310			2SA1175(F,E)	TRANSISTOR				
Q310			2SA1309A(Q,R)	TRANSISTOR				
Q310			2SA933S(Q,R)	TRANSISTOR				
Q311,312			2SD1302(S,T)	TRANSISTOR				
Q311,312			2SD1450(S,T)	TRANSISTOR				
Q313-315			2SC4081(R,S)	TRANSISTOR			T	
A301			W02-2509-05	FM FRONT-END ASSY				
AUDIO UNIT- EXCEPT TUNER (X09-)								
C1 ,2			CC73FSL1H221J	CHIP C	220PF	J	KRPYMX	
C1 ,2			CC73FSL1H471J	CHIP C	470PF	J		
C3 -9			CE04LW1V4R7M	ELECTRO	4.7UF	35WV		
C10			CE04LW1V100M	ELECTRO	10UF	35WV		
C11			CE04LW1HR22M	ELECTRO	0.22UF	50WV		
C12			CC45FSL1H220J	CERAMIC	22PF	J		
C13			CE04LW1H010M	ELECTRO	1.0UF	50WV		
C14			CQ93FMG1H223J	MYLAR	0.022UF	J		
C29 ,30			CE04LW1C220M	ELECTRO	22UF	16WV		
C31			CE04LW1H010M	ELECTRO	1.0UF	50WV		
C32			CE04LW1V100M	ELECTRO	10UF	35WV		
C33 -36			CE04LW1V4R7M	ELECTRO	4.7UF	35WV		
C37			CE04LW1C220M	ELECTRO	22UF	16WV		
C38 ,39			CK73FB1E104K	CHIP C	0.10UF	K		
C40			CK73FB1H562K	CHIP C	5600PF	K		
C41			CF92FV1H684J	MF-C	0.68UF	J		
C42 ,43			CK73FF1E154Z	CHIP C	0.15UF	Z		
C44 ,45			CK73FB1H223K	CHIP C	0.022UF	K		
C46			CQ93FMG1H122J	MYLAR	1200PF	J		
C47			CK73FB1H222K	CHIP C	2200PF	K		
C48 ,49			CK73FF1E154Z	CHIP C	0.15UF	Z		
C50 ,51			CK73FB1H562K	CHIP C	5600PF	K		
C71 ,72			CC45FSL1H101J	CERAMIC	100PF	J		
C73 ,74		✱	C90-3413-05	ALMINIUM ELECTROLYTIC C.				
C75 -78			CQ93FMG1H103J	MYLAR	0.010UF	J		
C79 ,80			CK45FB1H102K	CERAMIC	1000PF	K		
C81 ,82			CK45FB1H102K	CERAMIC	1000PF	K	TEG	4
C81 ,82			CK45FB1H102K	CERAMIC	1000PF	K	TEG	3
C83 ,84			CQ93FMG1H153J	MYLAR	0.015UF	J	TEG	4
C83 ,84			CQ93FMG1H153J	MYLAR	0.015UF	J	TEG	3
C87			CC45FSL1H331J	CERAMIC	330PF	J		
C88 ,89			CE04LW1H010M	ELECTRO	1.0UF	50WV		
C90			CK45FB1H821K	CERAMIC	820PF	K		
C92			CC45FSL1H331J	CERAMIC	330PF	J		
C93			CE04LW1H010M	ELECTRO	1.0UF	50WV		
C97			CE04LW1H010M	ELECTRO	1.0UF	50WV	M	3
C97			CE04LW1H010M	ELECTRO	1.0UF	50WV	M	2
C98			CQ93FMG1H103J	MYLAR	0.010UF	J	M	3
C98			CQ93FMG1H103J	MYLAR	0.010UF	J	M	2
C99			CQ93FMG1H222J	MYLAR	2200PF	J	M	3
C99			CQ93FMG1H222J	MYLAR	2200PF	J	M	2
C100			CQ93FMG1H104J	MYLAR	0.10UF	J	M	3
C100			CQ93FMG1H104J	MYLAR	0.10UF	J	M	2
C101,102			CF92FV1H224J	MF-C	0.22UF	J	M	3
C101,102			CF92FV1H224J	MF-C	0.22UF	J	M	2

L:Scandinavia **K:** USA **P:** Canada **1:** RXD-F41 **2:** RXD-F42
Y: PX(Far East, Hawaii) **T:** England **E:**Europe **3:** RXD-F3 **4:** RXD-F4
Y:AAFES(Europe) **X:** Australia **M:** Other Areas
⚠ indicates safety critical components.

✱ New Parts
Parts without **Parts No.** are not supplied.
Les articles non mentionnes dans le **Parts No.** ne sont pas fournis.
Teile ohne **Parts No.** werden nicht geliefert.

NO. 16

Ref. No.	Add-ress	New Parts	Parts No.	Description			Desti-nation	Re-marks
C103			CF92FV1H105J	MF-C	1.0UF	J	M	3
C103			CF92FV1H105J	MF-C	1.0UF	J	M	2
C104			CE04LW1H010M	ELECTRO	1.0UF	50WV	M	3
C104			CE04LW1H010M	ELECTRO	1.0UF	50WV	M	2
C105			CQ93FMG1H222J	MYLAR	2200PF	J	M	3
C105			CQ93FMG1H222J	MYLAR	2200PF	J	M	2
C106			CQ93FMG1H103J	MYLAR	0.010UF	J	M	3
C106			CQ93FMG1H103J	MYLAR	0.010UF	J	M	2
C107			CQ93FMG1H104J	MYLAR	0.10UF	J	M	3
C107			CQ93FMG1H104J	MYLAR	0.10UF	J	M	2
C108			CE04LW1C470M	ELECTRO	47UF	16WV	M	3
C108			CE04LW1C470M	ELECTRO	47UF	16WV	M	2
C109			CC73FSL1H680J	CHIP C	68PF	J	M	3
C109			CC73FSL1H680J	CHIP C	68PF	J	M	2
C110			CE04LW1A470M	ELECTRO	47UF	10WV		
C110			CE04LW1A470M	ELECTRO	47UF	10WV	M	2
C112			CE04LW1A470M	ELECTRO	47UF	10WV		
C114			CE04LW1C470M	ELECTRO	47UF	16WV		
C115,116			C90-3561-05	ELECTRO	4700UF	50WV		
C117,118			CQ93FMG1H104J	MYLAR	0.10UF	J		
C123			CE04LW1V332M	ELECTRO	3300UF	35WV		
C125			CE04LW1V471M	ELECTRO	470UF	35WV		
C128			CE04LW1H101M	ELECTRO	100UF	50WV		
C129			CE04LW1E101M	ELECTRO	100UF	25WV		
C131			CE04LW1H101M	ELECTRO	100UF	50WV		
C134			CE04LW1V330M	ELECTRO	33UF	35WV		
C135			CE04LW1V222M	ELECTRO	2200UF	35WV		
C136,137			CQ93FMG1H104J	MYLAR	0.10UF	J		
C138			CE04LW1A470M	ELECTRO	47UF	10WV		
C139			CE04LW1V4R7M	ELECTRO	4.7UF	35WV		
C141			CE04LW1V330M	ELECTRO	33UF	35WV		
C142			CE04LW1V221M	ELECTRO	220UF	35WV		
⚠ C144			C91-1488-05	MF	6800PF	250VAC		
C146			CE04LW1H2R2M	ELECTRO	2.2UF	50WV		
C147			CE04LW1H100M	ELECTRO	10UF	50WV		
C150,151			CK45FF1H103Z	CERAMIC	0.010UF	Z		
C152			CE04LW1C470M	ELECTRO	47UF	16WV		
C154,155			CE04LW1C470M	ELECTRO	47UF	16WV		
C156			CE04LW1C221M	ELECTRO	220UF	16WV		
C160			CK73FB1H471K	CHIP C	470PF	K		
C163,164			CC73FSL1H101J	CHIP C	100PF	J		
C166,167			CK73FB1H103K	CHIP C	0.010UF	K		
C170			CK73FB1H103K	CHIP C	0.010UF	K		
C171			CK45FF1H103Z	CERAMIC	0.010UF	Z		
C173-176			CE04LW1V4R7M	ELECTRO	4.7UF	35WV		
C177			CK73FB1H103K	CHIP C	0.010UF	K		
C178			CE04LW1C100M	ELECTRO	10UF	16WV	M	3
C178			CE04LW1C100M	ELECTRO	10UF	16WV	M	2
C179,180			CE04LW1V4R7M	ELECTRO	4.7UF	35WV		
C182			CE04LW1H010M	ELECTRO	1.0UF	50WV	M	3
C182			CE04LW1H010M	ELECTRO	1.0UF	50WV	M	2
C183			CE04LW1V221M	ELECTRO	220UF	35WV		2
C183			CE04LW1V221M	ELECTRO	220UF	35WV		3
C183			CE04LW1V221M	ELECTRO	220UF	35WV		1
C183			CE04LW1V221M	ELECTRO	220UF	35WV	YMXTEG	4

L:Scandinavia **K:** USA **P:** Canada **1:** RXD-F41 **2:** RXD-F42
Y: PX(Far East, Hawaii) **T:** England **E:**Europe **3:** RXD-F3 **4:** RXD-F4
Y:AAFES(Europe) **X:** Australia **M:** Other Areas
⚠ indicates safety critical components.

NO. 17

* New Parts
Parts without **Parts No.** are not supplied.
Les articles non mentionnes dans le **Parts No.** *ne sont pas fournis.*
Teile ohne **Parts No.** werden nicht geliefert.

Ref. No.	Address	New Parts	Parts No.	Description	Destination	Remarks
C183			C90-3398-05	ELECTRO 220UF 35WV	KRP	4
C185,186			CC73FSL1H470	CHIP C 47PF J	TEG	3
C185,186			CC73FSL1H470J	CHIP C 47PF J	TEG	4
C187,188			CE04LW1V100M	ELECTRO 10UF 35WV		
C189,190			CE04HW1H101M	NP-ELEC 100UF 50WV		1
C191			CE04LW1H221M	ELECTRO 220UF 50WV		
C192			CE04LW1C100M	ELECTRO 10UF 16WV		
C193			CK73FB1E104K	CHIP C 0.10UF K		
C195			C91-0750-05	CERAMIC 270PF K		
C500			CK45FB1H102K	CERAMIC 1000PF K	KRP	3
C500			CK45FB1H102K	CERAMIC 1000PF K	KRPYM4	
C500			CK45FB1H102K	CERAMIC 1000PF K		1
C601			CE04LW1H3R3M	ELECTRO 3.3UF 50WV		
C602			CC45FSL1H101J	CERAMIC 100PF J	M	3
C602			CC45FSL1H101J	CERAMIC 100PF J	M	2
CN1			E40-4804-05	SOCKET FOR PIN ASSY		
CN2		*	E40-4858-05	SOCKET FOR PIN ASSY		
CN3			E40-4796-05	PIN ASSY		
CN4 ,5			E40-4809-05	PIN ASSY		
CN6	2I	*	E40-4920-05	FLAT CABLE CONNCTOR		
CN7			E40-4284-05	FLAT CABLE CONNCTOR		
CN7 ,8			E40-4297-05	FLAT CABLE CONNCTOR	M	2
CN8			E40-4298-05	FLAT CABLE CONNCTOR		
CN201			E40-4245-05	PIN ASSY	TEG	3
CN202			E40-4245-05	PIN ASSY		
J1			E63-0096-05	PHONO JACK		1S
J1			E63-0096-05	PHONO JACK		4S
J1			E63-0096-05	PHONO JACK	M	2
J1			E63-0096-05	PHONO JACK		W
J1			E63-0096-05	PHONO JACK		4W
J1		*	E63-0144-05	PHONO JACK		3H
J1		*	E63-0144-05	PHONO JACK		1H
J2 ,3		*	E11-0283-05	MINIATURE PHONE JACK MIC1/MIC2		
J4		*	E11-0280-05	PHONE JACK		1H
J4		*	E11-0280-05	PHONE JACK		3H
J4		*	E11-0282-05	PHONE JACK		4
J4		*	E11-0282-05	PHONE JACK		1S
J4			E11-0282-05	PHONE JACK	M	2
J4		*	E11-0282-05	PHONE JACK		3S
J5			E70-0032-05	LOCK TERMINAL BOARD	KRP	3
J5			E70-0032-05	LOCK TERMINAL BOARD	KRP	4
J5			E70-0032-05	LOCK TERMINAL BOARD		1
J5			E70-0048-05	LOCK TERMINAL BOARD	MXTEG	3
J5			E70-0048-05	LOCK TERMINAL BOARD	YMXTEG	4
J5			E70-0048-05	LOCK TERMINAL BOARD	M	2
⚠ J6			E03-0316-05	AC OUTLET		
⚠ F1			F05-6029-05	FUSE (UL) (125V 6A)	KRP	3
⚠ F1			F05-6029-05	FUSE (UL) (125V 6A)	KRP	4
⚠ F1			F05-6029-05	FUSE (UL) (125V 6A) 1		
⚠ F1 ,2			F05-3121-05	FUSE (SEMKO) (250V T3.15AL)	M	3
⚠ F1 ,2			F05-3121-05	FUSE (SEMKO) (250V T3.15AL)	YM	4
⚠ F1 ,2			F05-3121-05	FUSE (SEMKO) (250V T3.15AL)	M	2
⚠ F3 ,4			F05-5025-05	FUSE (SEMKO) (250V T5A L)	MXTEG	3
⚠ F3 ,4			F05-5025-05	FUSE (SEMKO) (250V T5A L)	YMXTEG	4

L: Scandinavia **K:** USA **P:** Canada **W:** MALAYSIA made **H:** HUIZHOU made
Y: PX(Far East, Hawaii) **T:** England **E:** Europe **S:** SINGAPORE made **1:** RXD-F41
Y: AAFES(Europe) **X:** Australia **M:** Other Areas **2:** RXD-F42 **3:** RXD-F3
4: RXD-F4
⚠ indicates safety critical components.

NO. 18

* New Parts
Parts without **Parts No.** are not supplied.
Les articles non mentionnes dans le **Parts No.** ne sont pas fournis.
Teile ohne **Parts No.** werden nicht geliefert.

Ref. No.	Address	New Parts	Parts No.	Description	Destination	Remarks
⚠ F3 ,4			F05-5025-05	FUSE (SEMKO) (250V T5A L)	M	2
⚠ F3 ,4			F05-6029-05	FUSE (UL) (125V 6A)	KRP	3
⚠ F3 ,4			F05-6029-05	FUSE (UL) (125V 6A)	KPR	4
⚠ F3 ,4			F05-6029-05	FUSE (UL) (125V 6A)		1
⚠ F5			F06-1022-05	FUSE (SEMKO) (250V T1AL)	MXTEG	3
⚠ F5			F06-1022-05	FUSE (SEMKO) (250V T1AL)	YMXTEG	4
⚠ F5			F06-1022-05	FUSE (SEMKO) (250V T1AL)	M	2
⚠ F5			F06-1222-05	FUSE (UL) (250V 1.25A)	KRP	3
⚠ F5			F06-1222-05	FUSE (UL) (250V 1.25A)	KPR	4
⚠ F5			F06-1222-05	FUSE (UL) (250V 1.25A)		1
⚠ F6			F04-2025-05	FUSE (UL) (250V 2A)	KRP	3
⚠ F6			F04-2025-05	FUSE (UL) (250V 2A)	KRP	4
⚠ F6			F04-2025-05	FUSE (UL) (250V 2A)		1
⚠ F6			F05-1623-05	FUSE (SEMKO) (250V T1.6AL)	MXTEG	3
⚠ F6			F05-1623-05	FUSE (SEMKO) (250V T1.6AL)	YMXTEG	4
⚠ F6			F05-1623-05	FUSE (SEMKO) (250V T1.6AL)	M	2
⚠ F7			F50-0062-05	FUSE(5X20)	KRP	3
⚠ F7			F50-0062-05	FUSE(5X20)	KRP	4
⚠ F7			F50-0062-05	FUSE(5X20)		1
-		*	J21-6254-14	MOUNTING HARDWARE	TEG	
-		*	J21-6255-14	MOUNTING HARDWARE	TEG	
-			J61-0307-05	WIRE BAND		3
-			J61-0307-05	WIRE BAND	TEG	
CN101-108			J13-0075-05	FUSE CLIP		
CN109,110			J13-0075-05	FUSE CLIP	M	2
CN109,110			J13-0075-05	FUSE CLIP	M	3
CN109,110			J13-0075-05	FUSE CLIP	YM	4
CN111,112			J13-0075-05	FUSE CLIP	KRPM	3
CN111,112			J13-0075-05	FUSE CLIP	KRPYM	4
CN111,112			J13-0075-05	FUSE CLIP	M	2
CN113,114			J13-0075-05	FUSE CLIP	KRP	4
CN113,114			J13-0075-05	FUSE CLIP	KRP	3
CN113,114			J13-0075-05	FUSE CLIP		1
L1 ,2			L39-0085-05	PHASE COMPENSATION COIL	TEG	3
L1 ,2			L39-0085-05	PHASE COMPENSATION COIL	TEG	4
R1			RK73FB2A102J	CHIP R 1.0K J 1/10W		
R4 -7			RK73FB2A224J	CHIP R 220K J 1/10W		
R8			RK73EB2B224J	CHIP R 220K J 1/8W		
R9 -12			RK73FB2A224J	CHIP R 220K J 1/10W		
R14				CHIP R 220K J 1/10W		
R43 ,44			RK73FB2A102J	CHIP R 1.0K J 1/10W		
R51 ,52			RK73FB2A562J	CHIP R 5.6K J 1/10W		
R55 ,56			RK73FB2A104J	CHIP R 100K J 1/10W		
R107-110			RD14NB2E100J	RD 10 J 1/4W		
R111-114			RS14KB3DR22J	FL-PROOF RS 0.22 J 2W		
R119		*	RK73EB2B683J	CHIP R 68K J 1/8W		
R121-124			RD14NB2E681J	RD 680 J 1/4W		
R125,126			RD14NB2E4R7J	RD 4.7 J 1/4W	TEG	3
R125,126			RD14NB2E4R7J	RD 4.7 J 1/4W	TEG	4
R170			RK73FB2A682J	CHIP R 6.8K J 1/10W		
R171			RK73FB2A332J	CHIP R 3.3K J 1/10W		
R172			RK73FB2A561J	CHIP R 560 J 1/10W		
R173		*	RK73EB2B562J	CHIP R 5.6K J 1/8W		
R176,177			RK73EB2B103J	CHIP R 10K J 1/8W		

L: Scandinavia **K:** USA **P:** Canada **1:** RXD-F41 **2:** RXD-F42
Y: PX(Far East, Hawaii) **T:** England **E:** Europe **3:** RXD-F3 **4:** RXD-F4
Y: AAFES(Europe) **X:** Australia **M:** Other Areas
⚠ indicates safety critical components.

RXD-F3/F4/F41/F42

PARTS LIST

✱ New Parts
Parts without **Parts No.** are not supplied.
Les articles non mentionnes dans le **Parts No.** ne sont pas fournis.
Teile ohne **Parts No.** werden nicht geliefert.

NO. 19

	Ref. No.	Address	New Parts	Parts No.	Description	Destination	Remarks
	R178,179			RK73EB2B681J	CHIP R 680 J 1/8W		
	R185			RS14KB3A152J	FL-PROOF RS 1.5K J 1W		
	R187			RK73FB2A823J	CHIP R 82K J 1/10W		
	R188			RK73FB2A104J	CHIP R 100K J 1/10W		
	R189			RK73FB2A102J	CHIP R 1.0K J 1/10W		
	R190			RK73FB2A473J	CHIP R 47K J 1/10W		
	R191			RK73FB2A102J	CHIP R 1.0K J 1/10W		
	R192			RK73FB2A103J	CHIP R 10K J 1/10W		
	R194			RK73FB2A103J	CHIP R 10K J 1/10W		
	R195			RS14KB3D150J	FL-PROOF RS 15 J 2W		1
	R195			RS14KB3D330J	FL-PROOF RS 33 J 2W		3
	R195			RS14KB3D330J	FL-PROOF RS 33 J 2W		4
	R195			RS14KB3D330J	FL-PROOF RS 33 J 2W	M	2
	R197			RK73FB2A103J	CHIP R 10K J 1/10W		4
⚠	R198			RS14KB3D330J	FL-PROOF RS 33 J 2W		4
	R199			RK73FB2A682J	CHIP R 6.8K J 1/10W	MXTEG	3
	R199			RK73FB2A682J	CHIP R 6.8K J 1/10W	YMXTEG	4
	R199			RK73FB2A682J	CHIP R 6.8K J 1/10W	M	2
⚠	R201			RS14KB3A330J	FL-PROOF RS 33 J 1W	MXTEG	3
⚠	R201			RS14KB3A330J	FL-PROOF RS 33 J 1W	YMXTEG	4
⚠	R201			RS14KB3A330J	FL-PROOF RS 33 J 1W	M	2
⚠	R207			RD14NB2E100J	RD 10 J 1/4W		
⚠	R209			RD14NB2E220J	RD 22 J 1/4W		
⚠	R210,211			RD14NB2E100J	RD 10 J 1/4W		
⚠	R212			RD14NB2E101J	RD 100 J 1/4W		
	R215,216			RK73FB2A222J	CHIP R 2.2K J 1/10W	MXTEG	3
	R215,216			RK73FB2A222J	CHIP R 2.2K J 1/10W		4
	R215,216			RK73FB2A222J	CHIP R 2.2K J 1/10W	M	2
	R217,218			RK73FB2A224J	CHIP R 220K J 1/10W		
	R220			RK73FB2A103J	CHIP R 10K J 1/10W		
	R221			RK73EB2B103J	CHIP R 10K J 1/8W		
	R226			RK73FB2A391J	CHIP R 390 J 1/10W		
	R228			RK73FB2A101J	CHIP R 100 J 1/10W		
	R254			RK73FB2A102J	CHIP R 1.0K J 1/10W		
	R256			RK73FB2A102J	CHIP R 1.0K J 1/10W		
	R258			RK73FB2A102J	CHIP R 1.0K J 1/10W		
	R259			RK73EB2B183J	CHIP R 18K J 1/8W		
	R261-263			RK73FB2A104J	CHIP R 100K J 1/10W		
	R265,266			RK73FB2A103J	CHIP R 10K J 1/10W	MXTEG	3
	R265,266			RK73FB2A103J	CHIP R 10K J 1/10W		4
	R265,266			RK73FB2A103J	CHIP R 10K J 1/10W	M	2
	R269,270			RS14KB3D4R7J	FL-PROOF RS 4.7 J 2W		
⚠	R271			RS14KB3D221J	FL-PROOF RS 220 J 2W		
	R272			RD14NB2E121J	RD 120 J 1/4W	M	3
	R272			RD14NB2E121J	RD 120 J 1/4W	M	2
⚠	R273			R92-1769-05	CARBON 3.3M J 1/2W	KRP	3
⚠	R273			R92-1769-05	CARBON 3.3M J 1/2W	KRP	4
⚠	R273			R92-1769-05	CARBON 3.3M J 1/2W		1
	R274			RK73FB2A473J	CHIP R 47K J 1/10W		
	R276			RK73FB2A225J	CHIP R 2.2M J 1/10W	M	3
	R276			RK73FB2A225J	CHIP R 2.2M J 1/10W	M	2
	VR1			R31-0002-05	VARIABLE RESISTOR		
	VR2			R31-0028-05	VARIABLE RESISTOR		
	W501-505			R92-0670-05	CHIP R 0 OHM	TEG	
	W512			R92-0679-05	CHIP R 0 OHM	TEG	

L:Scandinavia **K:** USA **P:** Canada **1:** RXD-F41 **2:** RXD-F42
Y: PX(Far East, Hawaii) **T:** England **E:**Europe **3:** RXD-F3 **4:** RXD-F4
Y:AAFES(Europe) **X:** Australia **M:** Other Areas

⚠ indicates safety critical components.

✱ New Parts
Parts without **Parts No.** are not supplied.
Les articles non mentionnes dans le **Parts No.** ne sont pas fournis.
Teile ohne **Parts No.** werden nicht geliefert.

NO. 20

	Ref. No.	Address	New Parts	Parts No.	Description	Destination	Remarks
	W513			R92-0679-05	CHIP R 0 OHM	T	
	W516			R92-0670-05	CHIP R 0 OHM	TEG	
	W518-522			R92-0670-05	CHIP R 0 OHM	EG	
	W521			R92-0670-0	CHIP R 0 OHM	T	
⚠	K1			S51-2094-05	MAGNETIC RELAY		
	K2			S51-2093-05	MAGNETIC RELAY		4
	K3			S51-2093-05	MAGNETIC RELAY	MXTEG	3
	K3			S51-2093-05	MAGNETIC RELAY	M	2
	K3			S51-2093-05	MAGNETIC RELAY	YMXTEG	4
⚠	K4			S51-1052-05	MAGNETIC RELAY		1
⚠	S1			S31-2322-05	SLIDE SWITCH 120-/220/230-	M	3
⚠	S1			S31-2322-05	SLIDE SWITCH 120-/220/230-	YM	4
⚠	S1			S31-2322-05	SLIDE SWITCH 120-/220/230-	M	2
⚠	D1			D3SBA20F03	DIODE		
⚠	D1			RBV-402LFA	DIODE		
⚠	D2			KBP02ML-6127	DIODE		
⚠	D3 -9			S5688B	DIODE		
⚠	D3 -9			1SR139-100	DIODE		
⚠	D10 ,11			HSS104A	DIODE		
⚠	D10 ,11			1SS131	DIODE		
⚠	D12 ,13			HZS5.6N(B2)	ZENER DIODE		
⚠	D12 ,13			RD5.6ES(B2)	ZENER DIODE		
⚠	D12 ,13			UZ-5.6BSB	ZENER DIODE		
	D14 ,15			HZS13N(B2)	ZENER DIODE		
	D14 ,15			RD13ES(B2)	ZENER DIODE		
	D14 ,15			UZ-13BSB	ZENER DIODE		
	D16			HZS16N(B2	ZENER DIODE		
	D16			RD16ES(B2)	ZENER DIODE		
	D16			UZ-16BSB	ZENER DIODE		4
	D16			UZ-16BSB	ZENER DIODE	M	2
	D16			UZ-16BSB	ZENER DIODE		3
	D17 -19			HSS104A	DIODE		
	D17 -19			1SS131	DIODE		
	D20			HSS104A	DIODE		4
	D20			1SS131	DIODE		4
	D21			HSS104A	DIODE	YMXTEG	4
	D21			HSS104A	DIODE	MXTEG	3
	D21			HSS104A	DIODE	M	2
	D21			1SS131	DIODE	YMXTEG	4
	D21			1SS131	DIODE	MXTEG	3
	D21			1SS131	DIODE	M	2
	D22			MA111	DIODE		
	D23 ,24			HSS104A	DIODE		
	D23 ,24			1SS131	DIODE		
	D25 ,26			HZS6.2N(B2)	ZENER DIODE		
	D25 ,26			RD6.2ES(B2)	ZENER DIODE		
	D25 ,26			UZ-6.2BSB	ZENER DIODE		
	D28			HSS104A	DIODE		
	D28			1SS131	DIODE		
	D30 ,31			MA111	DIODE		
	D32 ,33			HSS104A	DIODE		
	D32 ,33			1SS131	DIODE		
	D34			HZS6.2N(B2)	ZENER DIODE	M	3
	D34			HZS6.2N(B2)	ZENER DIODE	M	2

L:Scandinavia **K:** USA **P:** Canada **1:** RXD-F41 **2:** RXD-F42
Y: PX(Far East, Hawaii) **T:** England **E:**Europe **3:** RXD-F3 **4:** RXD-F4
Y:AAFES(Europe) **X:** Australia **M:** Other Areas

⚠ indicates safety critical components.

✱ New Parts
Parts without **Parts No.** are not supplied.
Les articles non mentionnes dans le **Parts No.** *ne sont pas fournis.*
Teile ohne **Parts No.** werden nicht geliefert.

NO. 21

	Ref. No.	Add-ress	New Parts	Parts No.	Description	Desti-nation	Re-marks
	D34			RD6.2ES(B2)	ZENER DIODE	M	3
	D34			RD6.2ES(B2)	ZENER DIODE	M	2
	D34			UZ-6.2BSB	ZENER DIODE	M	3
	D34			UZ-6.2BSB	ZENER DIODE	M	2
	D36 -39			HSS104A	DIODE		
	D36 -39			1SS131	DIODE		
⚠	D40			HSS104A	DIODE		1
⚠	D40			1SS131	DIODE		1
⚠	D41			HZS8.2N(B2)	ZENER DIODE		
⚠	D41			RD8.2ES(B2)	ZENER DIODE		
⚠	D41			UZ-8.2BSB	ZENER DIODE		
	D43 ,44			HSS104A	DIODE		
	D43 ,44			1SS131	DIODE		
	D45 ,46			HZS10N(B2)	ZENER DIODE	MXTEG	3
	D45 ,46			HZS10N(B2)	ZENER DIODE	YMXTEG	4
	D45 ,46			HZS10N(B2)	ZENER DIODE	M	2
	D45 ,46			HZS30N(B)	ZENER DIODE	KRP	3 H
	D45 ,46			HZS30N(B)	ZENER DIODE		1
	D45 ,46			RD10ES(B2)	ZENER DIODE	MXTEG	3
	D45 ,46			RD10ES(B2)	ZENER DIODE	YMXTEG	4
	D45 ,46			RD10ES(B2)	ZENER DIODE	M	2
	D45 ,46			RD30ES(B)	ZENER DIODE	KRP	3 H
	D45 ,46			RD30ES(B)	ZENER DIODE		1
	D45 ,46			UZ-10BSB	ZENER DIODE	KRPYMX	4
	D45 ,46			UZ-10BSB	ZENER DIODE	M	2
⚠	D50			S5688B	DIODE		
⚠	D50			1SR139-100	DIODE		
⚠	D51			HSS104A	DIODE		
⚠	D51			1SS131	DIODE		
⚠	D60			S5688B	DIODE		
⚠	D60			1SR139-100	DIODE		
	D61 -64			MA111	DIODE		
⚠	D65			S5688B	DIODE		
⚠	D65			1SR139-100	DIODE		
	D603,604			HZS30N(B)	ZENER DIODE	KRP	3
	D603,604			HZS30N(B)	ZENER DIODE	KRP	4
	D603,604			HZS30N(B)	ZENER DIODE		1
	D603,604			RD30ES(B)	ZENER DIODE	KRP	3
	D603,604			RD30ES(B)	ZENER DIODE	KRP	4
	D603,604			RD30ES(B)	ZENER DIODE		1
	IC1			NJU7313AM	ANALOGUE IC		
	IC2			NJM4565M	IC(OP AMP X2)		
	IC3			NJM4565D-D	IC(OP AMP X2)		
	IC3			XRA15218-DX	IC(OP AMP X2)		
	IC7			NJM4565MD	IC(OP AMP X2)		
	IC8			M65844P	DI BI-POLAR IC	M	3
	IC8			M65844P	DI BI-POLAR IC	M	2
	IC10			BU4066BCF	IC(ANALOG SWITCH X4)	M	3
	IC10			BU4066BCF	IC(ANALOG SWITCH X4)	M	2
	IC11			BU4094BCF	MOS-IC		
	IC12			TDA7345D	ANALOGUE IC		
⚠	IC14			TA78057S	IC(VOLTAGE REGULATOR/+5.75V)		
	IC15			NJM4565M	IC(OP AMP X2)		
	Q9 ,10			2SC4137(V,W)	TRANSISTOR		
⚠	Q11 ,12			2SD2493	TRANSISTOR		

L:Scandinavia **K:** USA **P:** Canada **1:** RXD-F41 **2:** RXD-F42
Y: PX(Far East, Hawaii) **T:** England **E:**Europe **3:** RXD-F3 **4:** RXD-F4
Y:AAFES(Europe) **X:** Australia **M:** Other Areas **H:** HUIZHOU made
⚠ indicates safety critical components.

✱ New Parts
Parts without **Parts No.** are not supplied.
Les articles non mentionnes dans le **Parts No.** ne sont pas fournis.
Teile ohne **Parts No.** werden nicht geliefert.

NO. 22

	Ref. No.	Add-ress	New Parts	Parts No.	Description	Desti-nation	Re-marks
⚠	Q13 ,14			2SB1624	TRANSISTOR		
	Q15 ,16			2SC1740S(Q,R)	TRANSISTOR		
	Q15 ,16			2SC2458(Y,GR)	TRANSISTOR		
	Q15 ,16			2SC2785(F,E)	TRANSISTOR		
	Q15 ,16			2SC3311A(Q,R)	TRANSISTOR		
	Q17 ,18			2SC4081(R,S)	TRANSISTOR		
	Q19			2SC3246	TRANSISTOR	MXTEG	3
	Q19			2SC3246	TRANSISTOR	YMXTEG	4
	Q19			2SC3246	TRANSISTOR	M	2
⚠	Q20			2SD1893	TRANSISTOR		
	Q21			2SC4081(R,S)	TRANSISTOR		
	Q22			2SC1740S(Q,R)	TRANSISTOR		
	Q22			2SC2458(Y,GR)	TRANSISTOR		
	Q22			2SC2785(F,E)	TRANSISTOR		
	Q22			2SC3311A(Q,R)	TRANSISTOR		
⚠	Q26 ,27			2SB1370	TRANSISTOR		
⚠	Q26 ,27			2SB1375	TRANSISTOR		
⚠	Q28			2SA954(L,K)	TRANSISTOR		
	Q29			2SA1576(R,S)	TRANSISTOR		
	Q30			3(L,K)	TRANSISTOR		
	Q32			2SA1576(R,S)	TRANSISTOR		
	Q33			2SC1740S(Q,R)	TRANSISTOR		
	Q33			2SC2458(Y,GR)	TRANSISTOR		
	Q33			2SC2785(F,E)	TRANSISTOR		
	Q33			2SC3311A(Q,R)	TRANSISTOR		
	Q34 ,35			DTC124EU	DIGITAL TRANSISTOR		
	Q34 ,35			UN5212	TRANSISTOR		
	Q41			3(L,K)	TRANSISTOR		4
	Q43 ,44			2SC1845(F,E)	TRANSISTOR	MXTEG	3
	Q43 ,44			2SC1845(F,E)	TRANSISTOR		4
	Q43 ,44			2SC1845(F,E)	TRANSISTOR	M	2

CONTOL UNIT (X11-3600-00) : RXD-F42

	C1 -4			CE04LW1V4R7M	ELECTRO	4.7UF	35WV	
	C5 ,6			CE04LW1H2R2M	ELECTRO	2.2UF	50WV	
	C11			CE04LW1H2R2M	ELECTRO	2.2UF	50WV	
	C12 ,13			CK45FB1H102K	CERAMIC	1000PF	K	
	C14			CK45FB1H332K	CERAMIC	3300PF	K	
	C15			CK45FB1H102K	CERAMIC	1000PF	K	
	C17			CK45FB1H152K	CERAMIC	1500PF	K	
	C18			CE04LW1H2R2M	ELECTRO	2.2UF	50WV	
	C21 -23			CQ93FMG1H683J	MYLAR	0.068UF	J	
	C24 ,25			CC45FSL1H100D	CERAMIC	10PF	D	
	C26			CE04LW1C470M	ELECTRO	47UF	16WV	
	C28			CE04LW1H2R2M	ELECTRO	2.2UF	50WV	
	C29			CK45FB1H152K	CERAMIC	1500PF	K	
	C30			CK45FB1H561K	CERAMIC	560PF	K	
	C32			CK45FB1H102K	CERAMIC	1000PF	K	
	C34 ,35			CK45FB1H102K	CERAMIC	1000PF	K	
	C36			CK45FB1H821K	CERAMIC	820PF	K	
	C37			CE04LW1H2R2M	ELECTRO	2.2UF	50WV	
	C38 -40			CQ93FMG1H104J	MYLAR	0.10UF	J	
	C41 -43			CC45FSL1H101J	CERAMIC	100PF	J	
	C44			CE04LW1C470M	ELECTRO	47UF	16WV	
	C51			CE04LW1C470M	ELECTRO	47UF	16WV	

L:Scandinavia **K:** USA **P:** Canada **1:** RXD-F41 **2:** RXD-F42
Y: PX(Far East, Hawaii) **T:** England **E:**Europe **3:** RXD-F3 **4:** RXD-F4
Y:AAFES(Europe) **X:** Australia **M:** Other Areas
⚠ indicates safety critical components.

RXD-F3/F4/F41/F42

PARTS LIST

* New Parts
Parts without **Parts No.** are not supplied.
Les articles non mentionnes dans le **Parts No.** ne sont pas fournis.
Teile ohne **Parts No.** werden nicht geliefert.

NO. 23

Ref. No.	Add-ress	New Parts	Parts No.	Description	Desti-nation	Re-marks
C52			CE04LW1C101M	ELECTRO 100UF 16WV		
C53 ,54			CQ93FMG1H104J	MYLAR 0.10UF J		
C56 ,57			CK45FF1H103Z	CERAMIC 0.010UF Z		
X1		*	L78-0626-05	RESONATOR (16M)		
⚠ R51			RD14NB2E100J	RD 10 J 1/4W		
D1			HZS6.2N(B2)	ZENER DIODE		
D1			RD6.2ES(B2)	ZENER DIODE		
D1			UZ-6.2BSB	ZENER DIODE		
IC1			M65840SP	MOS-IC		
IC2			XRU4052BC	MOS-IC		
IC3			NJM4565L-D	IC(OP AMP X2)		
⚠ IC4			TA7805S	IC(VOLTAGE REGULATOR/ +5V)		
⚠ IC4			UPC7805AHF	IC(VOLTAGE REGULATOR/ +5V)		
IC5 ,6			NJM4565L-D	IC(OP AMP X2)		
Q1			DTC124ES	DIGITAL TRANSISTOR		
Q1			UN4212	DIGITAL TRANSISTOR		
DISPLAY UNIT (X14-)						
D56 -60			B30-2462-05	LED(GRN)		
D61 -67		*	B30-2476-05	LED		
D69			B30-1291-05	LED	M	2
C2			C90-3258-05	ELECTRO 10UF 50WV		
C3			CK73FF1C105Z	CHIP C 1.0UF Z		
C4			CK73FB1H102K	CHIP C 1000PF K		
C5 ,6			CC73FSL1H101J	CHIP C 100PF J		
C7 ,8			C90-3253-05	ELECTRO 1.0UF 50WV		
C9			C90-3212-05	ELECTRO 47UF 6.3WV		
C10			C90-3253-05	ELECTRO 1.0UF 50WV		
C11			CK73FB1H103K	CHIP C 0.010UF K		
C12			CC73FCH1H180J	CHIP C 18PF J		
C13			CC73FCH1H220J	CHIP C 22PF J		
C16			CE04LW1V470M	ELECTRO 47UF 35WV		
C17			C91-0769-05	CERAMIC 0.010UF K		
C18			C90-3216-05	ELECTRO 330UF 6.3WV		
C20 ,21			CK73FB1H103K	CHIP C 0.010UF K		
C22			CK73FF1C105Z	CHIP C 1.0UF Z		
C23 ,24			CC73FSL1H561J	CHIP C 560PF J		
C25			CK73FF1C105Z	CHIP C 1.0UF Z		
C26 ,27			CK73FB1H222K	CHIP C 2200PF K		
C28			CK73FF1C105Z	CHIP C 1.0UF Z		
C29 ,30			CK73FB1E153K	CHIP C 0.015UF K		
C31			CK73FF1C105Z	CHIP C 1.0UF Z		
C32 ,33			CK73FB1E104K	CHIP C 0.10UF K		
C34			C90-3244-05	ELECTRO 10UF 35WV		
C35			CK73FB1E104K	CHIP C 0.10UF K		
C36 -38			CC73FSL1H470J	CHIP C 47PF J		
C301,302			CF92FV1H564J	MF-C 0.56UF J		3
C301,302			CF92FV1H564J	MF-C 0.56UF J		4
C301,302			CF92FV1H564J	MF-C 0.56UF J	M	2
C303,304			CE04LW1H2R2M	ELECTRO 2.2UF 50WV		3
C303,304			CE04LW1H2R2M	ELECTRO 2.2UF 50WV		4
C303,304			CE04LW1H2R2M	ELECTRO 2.2UF 50WV	M	2
C305,306			CC73FSL1H181J	CHIP C 180PF J		3

L:Scandinavia **K:** USA **P:** Canada **1:** RXD-F41 **2:** RXD-F42
Y: PX(Far East, Hawaii) **T:** England **E:**Europe **3:** RXD-F3 **4:** RXD-F4
Y:AAFES(Europe) **X:** Australia **M:** Other Areas

⚠ indicates safety critical components.

* New Parts
Parts without **Parts No.** are not supplied.
Les articles non mentionnes dans le **Parts No.** ne sont pas fournis.
Teile ohne **Parts No.** werden nicht geliefert.

NO. 24

Ref. No.	Add-ress	New Parts	Parts No.	Description	Desti-nation	Re-marks
C305,306			CC73FSL1H181J	CHIP C 180PF J		4
C305,306			CC73FSL1H181J	CHIP C 180PF J	M	2
C307,308			CE04LW1V100M	ELECTRO 10UF 35WV		
C309,310			CE04LW1H2R2M	ELECTRO 2.2UF 50WV		
C311,312			CK73FB1H102K	CHIP 1000PF K		
C313,314			CC73FSL1H470J	CHIP C 47PF J	XTEG	3
C313,314			CC73FSL1H470J	CHIP C 47PF J	XTEG	4
C315,316			CK45FB1H222K	CERAMIC 2200PF K	XTEG	3
C315,316			CK45FB1H222K	CERAMIC 2200PF K	XTEG	4
C317,318			CC45FSL1H101J	CERAMIC 100PF J	KRP	3
C317,318			CC45FSL1H101J	CERAMIC 100PF J	KRP	4
C317,318			CC45FSL1H101J	CERAMIC 100PF J		1
C317,318			CC45FSL1H221J	CERAMIC 220PF J	XTEG	3
C317,318			CC45FSL1H221J	CERAMIC 220PF J	XTEG	4
C317,318			CC45FSL1H680J	CERAMIC 68PF J	M	3
C317,318			CC45FSL1H680J	CERAMIC 68PF J	YM	4
C317,318			CC45FSL1H680J	CERAMIC 68PF J	M	2
C319,320			CE04LW1A101M	ELECTRO 100UF 10WV		
C321,322			CC73FSL1H681J	CHIP C 680PF J	M	3
C321,322			CC73FSL1H681J	CHIP C 680PF J	YM	4
C321,322			CC73FSL1H681J	CHIP C 680PF J	M	2
C321,322			CK73FB1H102K	CHIP C 1000PF K	KRP	3
C321,322			CK73FB1H102K	CHIP C 1000PF K	KRP	4
C321,322			CK73FB1H102K	CHIP 1000PF K		1
C321,322			CK73FB1H152K	CHIP C 1500PF K	XTEG	3
C321,322			CK73FB1H152K	CHIP C 1500PF K	XTEG	4
C331,332			CE04LW1C470M	ELECTRO 47UF 16WV		
C333			CE04HW1H2R2M	NP-ELEC 2.2UF 50WV		
C334			CE04LW1H101M	ELECTRO UF 50WV		
CN1			E40-4796-05	PIN ASSY		
CN2		*	E40-4857-05	PIN ASSY		
CN301,302			E40-4810-05	SOCKET FOR PIN ASSY		
		*	J19-3759-13	HOLDER	M	2
		*	J19-3782-03	HOLDER		1
-		*	J19-3782-03	HOLDER		
X1			L77-2111-05	CRYSTAL RESONATOR(32.768kHz)		
X2			L78-0605-05	RESONATOR (8.38MHz)		
CP1			R90-0803-05	MULTI-COMP 100KX7 J 1/4W		
CP2			R90-0864-05	MULTI-COMP 100KX14		
CP3			R90-0820-05	MULTI-COMP 47K X12		
R3			RK73FB2A202J	CHIP R 2.0K J 1/10W		
R7			RK73FB2A101J	CHIP R J 1/10W		
R12			RK73FB2A101J	CHIP R J 1/10W		4
R13 -15			RK73FB2A101J	CHIP R J 1/10W		
R17 ,18			RK73FB2A101J	CHIP R J 1/10W		
R28 -31			RK73FB2A101J	CHIP R J 1/10W		
R48			RK73FB2A102J	CHIP R 1.0K J 1/10W		
R50			RK73FB2A472J	CHIP R 4.7K J 1/10W		
R51			RK73FB2A102J	CHIP R 1.0K J 1/10W		
R52			RK73FB2A103J	CHIP R 10K J 1/10W		
R53			RK73FB2A104J	CHIP R 100K J 1/10W		
R54 ,55			RK73FB2A472J	CHIP R 4.7K J 1/10W		
R67 -72			RK73FB2A104J	CHIP R 100K J 1/10W		

L:Scandinavia **K:** USA **P:** Canada **1:** RXD-F41 **2:** RXD-F42
Y: PX(Far East, Hawaii) **T:** England **E:**Europe **3:** RXD-F3 **4:** RXD-F4
Y:AAFES(Europe) **X:** Australia **M:** Other Areas

⚠ indicates safety critical components.

✱ New Parts
Parts without **Parts No.** are not supplied.
Les articles non mentionnes dans le **Parts No.** ne sont pas fournis.
Teile ohne **Parts No.** werden nicht geliefert.

NO. 25

Ref. No.	Add-ress	New Parts	Parts No.	Description				Desti-nation	Re-marks
R74			RK73FB2A104J	CHIP R	100K	J	1/10W		
R75			RK73FB2A473J	CHIP R	47K	J	1/10W		
R76			RK73FB2A101J	CHIP R	100	J	1/10W		
R79			RK73FB2A474J	CHIP R	470K	J	1/10W		
R80			RK73FB2A475K	CHIP R	4.7M	K	1/10W		
R81 ,82			RK73FB2A101J	CHIP R	100	J	1/10W		
R84			RK73FB2A101J	CHIP R	100	J	1/10W		
R85 -87			RK73FB2A103J	CHIP R	10K	J	1/10W		
R91 ,92			RK73FB2A102J	CHIP R	1.0K	J	1/10W		
R93			RK73FB2A302J	CHIP R	3.0K	J	1/10W		
R95 ,96			RK73FB2A103J	CHIP R	10K	J	1/10W		
R97 -103			RK73FB2A102J	CHIP R	1.0K	J	1/10W		
R106			RK73FB2A101J	CHIP R	100	J	1/10W		
R121			RK73FB2A223J	CHIP R	22K	J	1/10W		
R123			RK73FB2A223J	CHIP R	22K	J	1/10W		
R125			RK73FB2A223J	CHIP R	22K	J	1/10W		
R127			RK73FB2A223J	CHIPR	22K	J	1/10W		
R129			RK73FB2A223J	CHIPR	22K	J	1/10W		
R131			RK73FB2A223J	CHIPR	22K	J	1/10W		
R133			RK73FB2A223J	CHIPR	22K	J	1/10W		
R134			RK73FB2A103J	CHIPR	10K	J	1/10W		
R135			RK73FB2A223J	CHIPR	22K	J	1/10W		
R136			RK73FB2A103J	CHIPR	10K	J	1/10W		
R137			RK73FB2A223J	CHIPR	22K	J	1/10W		
R138			RK73FB2A103J	CHIPR	10K	J	1/10W		
R139			RK73FB2A223J	CHIPR	22K	J	1/10W		
R141			RK73FB2A223J	CHIPR	22K	J	1/10W		
R143			RK73FB2A223J	CHIPR	22K	J	1/10W		
R145			RK73FB2A223J	CHIPR	22K	J	1/10W		
R147			RK73FB2A223J	CHIPR	22K	J	1/10W		
R148			RK73EB2B103J	CHIPR	10K	J	1/8W		
R149			RK73FB2A223J	CHIPR	22K	J	1/10W		
R150			RK73FB2A103J	CHIPR	10K	J	1/10W		
R152			RK73FB2A223J	CHIPR	22K	J	1/10W	M	3
R152			RK73FB2A223J	CHIPR	22K	J	1/10W	YM	4
R152			RK73FB2A223J	CHIPR	22K	J	1/10W	M	
R154			RK73FB2A364J	CHIPR	360K	J	1/10W		
R155,156			RK73FB2A472J	CHIPR	4.7K	J	1/10W		
R157			RK73FB2A364J	CHIPR	360K	J	1/10W		
R158			RK73FB2A472J	CHIPR	4.7K	J	1/10W		
R159			RK73FB2A364J	CHIPR	360K	J	1/10W		
R164			RK73FB2A364J	CHIPR	360K	J	1/10W		
R165,166			RK73FB2A472J	CHIPR	4.7K	J	1/10W		
R167			RK73FB2A364J	CHIPR	360K	J	1/10W		
R168			RK73FB2A472J	CHIPR	4.7K	J	1/10W		
R169,170			RK73FB2A364J	CHIPR	360K	J	1/10W		
R171,172			RK73FB2A472J	CHIPR	4.7K	J	1/10W		
R173			RK73FB2A364J	CHIPR	360K	J	1/10W		
R174			RK73FB2A472J	CHIPR	4.7K	J	1/10W		
R175,176			RK73FB2A364J	CHIPR	360K	J	1/10W		
R177,178			RK73FB2A472J	CHIPR	4.7K	J	1/10W		
R179			RK73FB2A364J	CHIPR	360K	J	1/10W		
R180			RK73FB2A362J	CHIPR	3.6K	J	1/10W		
R181			RK73FB2A364J	CHIPR	360K	J	1/10W		
R194			RK73FB2A104J	CHIPR	100K	J	1/10W		

L:Scandinavia **K:** USA **P:** Canada **1:** RXD-F41 **2:** RXD-F42
Y: PX(Far East, Hawaii) **T:** England **E:**Europe **3:** RXD-F3 **4:** RXD-F4
Y:AAFES(Europe) **X:** Australia **M:** Other Areas
⚠ indicates safety critical components.

✱ New Parts
Parts without **Parts No.** are not supplied.
Les articles non mentionnes dans le **Parts No.** ne sont pas fournis.
Teile ohne **Parts No.** werden nicht geliefert.

NO. 26

Ref. No.	Add-ress	New Parts	Parts No.	Description				Desti-nation	Re-marks
R301			RK73FB2A101J	CHIP R	100	J	1/10W		
R307,308			RK73FB2A101J	CHIP R	100	J	1/10W		3
R307,308			RK73FB2A101J	CHIP R	100	J	1/10W		4
R307,308			RK73FB2A101J	CHIP R	100	J	1/10W	M	2
R309,310			RK73FB2A301J	CHIP R	300	J	1/10W		3
R309,310			RK73FB2A301J	CHIP R	300	J	1/10W		4
R309,310			RK73FB2A301J	CHIP R	300	J	1/10W	M	2
R311,312			RK73FB2A471J	CHIP R	470	J	1/10W		3
R311,312			RK73FB2A471J	CHIP R	470	J	1/10W		4
R311,312			RK73FB2A471J	CHIP R	470	J	1/10W	M	2
R313,314			RK73FB2A152J	CHIP R	1.5K	J	1/10W		3
R313,314			RK73FB2A152J	CHIP R	1.5K	J	1/10W		4
R313,314			RK73FB2A152J	CHIP R	1.5K	J	1/10W	M	2
R315,316			RK73FB2A103J	CHIP R	10K	J	1/10W		
R317,318			RK73FB2A102J	CHIP R	1.0K	J	1/10W		
R319			RK73FB2A152J	CHIP R	1.5K	J	1/10W		
R321			RK73FB2A152J	CHIP R	1.5K	J	1/10W		
R325,326			RK73FB2A103J	CHIP R	10K	J	1/10W		
R327,328			RK73FB2A102J	CHIP R	1.0K	J	1/10W		
⚠ R340,341			RD14NB2E470J	RD	47	J	1/4W		
R347			RD14NB2E101J	RD	100	J	1/4W		
R351,352			RK73FB2A104J	CHIP R	100K	J	1/10W		
W202,203			R92-0670-05	CHIP R	0 OHM				
W205			R92-0670-05	CHIP R	0 OHM				
W207			R92-0679-05	CHIP R	0 OHM				
W209			R92-0670-05	CHIP R	0 OHM				
W210			R92-0679-05	CHIP R	0 OHM				
W215			R92-0670-05	CHIP R	0 OHM				
W216,217			R92-0679-05	CHIP R	0 OHM				
W223			R92-0670-05	CHIP R	0 OHM				
W225			R92-0670-05	CHIP R	0 OHM				
W401,402			R92-0670-05	CHIP R	0 OHM				1
S1-8			31-05	TACT	SWITCH				3
S9			31-05	TACT	SWITCH				4
S9			31-05	TACT	SWITCH			M	2
S10			31-05	TACT	SWITCH				1
S11			31-05	TACT	SWITCH				4
S11			31-05	TACT	SWITCH			M	2
S12			31-05	TACT	SWITCH				3
S13			31-05	TACT	SWITCH				4
S13			31-05	TACT	SWITCH			M	2
S14-32			31-05	TACT	SWITCH				1
S33			T99-0559-05	ROTARY ENCODER VOLUME CONTROL					
D1-15			HSS104A	DIODE					
D1-15			1SS131	DIODE					
D16			MA111	DIODE				M	3
D16			MA111	DIODE				YM	4
D16			MA111	DIODE				M	2
D17			HSS104A	DIODE				XTEG	4
D17			HSS104A	DIODE				XTEG	3
D17			1SS131	DIODE				XTEG	4
D17			1SS131	DIODE				XTEG	3
D18			HSS104A	DIODE				KRPM	3

L:Scandinavia **K:** USA **P:** Canada **1:** RXD-F41 **2:** RXD-F42
Y: PX(Far East, Hawaii) **T:** England **E:**Europe **3:** RXD-F3 **4:** RXD-F4
Y:AAFES(Europe) **X:** Australia **M:** Other Areas
⚠ indicates safety critical components.

RXD-F3/F4/F41/F42

PARTS LIST

✱ New Parts
Parts without **Parts No.** are not supplied.
Les articles non mentionnes dans le **Parts No.** ne sont pas fournis.
Teile ohne **Parts No.** werden nicht geliefert.

NO. 27

Ref. No.	Add-ress	New Parts	Parts No.	Description	Desti-nation	Re-marks
D18			1SS131	DIODE	KRPM	3
D18 ,19			HSS104A	DIODE		1
D18 ,19			HSS104A	DIODE	M	2
D18 ,19			1SS131	DIODE		1
D18 ,19			1SS131	DIODE	M	2
D19			HSS104A	DIODE	EG	4
D19			1SS131	DIODE	EG	4
D20			HSS104A	DIODE	T	4
D20			HSS104A	DIODE	T	3
D20			1SS131	DIODE	T	4
D20			1SS131	DIODE	T	3
D21			HSS104A	DIODE	MXEG	3
D21			HSS104A	DIODE	YMXEG	4
D21			HSS104A	DIODE	M	2
D21			1SS131	DIODE	MXEG	3
D21			1SS131	DIODE	YMXEG	4
D21			1SS131	DIODE	M	2
D22			MA111	DIODE	M	3
D22			MA111	DIODE	YM	4
D22			MA111	DIODE	M	2
D23			HSS104A	DIODE	XEG	3
D23			HSS104A	DIODE	XEG	4
D23			1SS131	DIODE	XEG	3
D23			1SS131	DIODE	XEG	4
D24 -27			MA111	DIODE		
D28 -39			HSS104A	DIODE		
D28 -39			1SS131	DIODE		
D40 -43			MA111	DIODE		
D44			HSS104A	DIODE		
D44			1SS131	DIODE		
D50 -55			HSS104A	DIODE		
D50 -55			1SS131	DIODE		
D68			HZS5.1N(B2)	ZENER DIODE		
D68			RD5.1ES(B2)	ZENER DIODE		
D68			UZ-5.1BSB	ZENER DIODE		4
D68			UZ-5.1BSB	ZENER DIODE	M	2
D72			HSS104A	DIODE		
D72			1SS131	DIODE		
D73 ,74			MA111	DIODE		
D75 -80			HSS104A	DIODE		
D75 -80			1SS131	DIODE		
D301			HZS3.9N(B2)	ZENER DIODE		
D301			RD3.9ES(B2)	ZENER DIODE		
D301			UZ-3.9BSB	ZENER DIODE		4
D301			UZ-3.9BSB	ZENER DIODE	M	2
ED1		✱	BJ344GK	INDICATOR TUBE		
ED1		✱	FIP8AMW6R	INDICATOR TUBE		
IC1		✱	M38198MC-053FP	MI-COM IC		
IC2		✱	NJU3718G	MOS-IC		
IC3		✱	PST993D-T	ANALOGUE IC		
IC3			S-806D-Z	ANALOGUE IC		
IC4 ,5			NJM4565D	IC(OP AMP X2)		
IC301			NJM4565D-D	IC(OP AMP X2)		
Q1 -8			2SC4081	TRANSISTOR		
Q9 -24			2SA1576	TRANSISTOR	M	3

L:Scandinavia **K:** USA **P:** Canada **1:** RXD-F41 **2:** RXD-F42
Y: PX(Far East, Hawaii) **T:** England **E:**Europe **3:** RXD-F3 **4:** RXD-F4
Y:AAFES(Europe) **X:** Australia **M:** Other Areas

⚠ indicates safety critical components.

✱ New Parts
Parts without **Parts No.** are not supplied.
Les articles non mentionnes dans le **Parts No.** ne sont pas fournis.
Teile ohne **Parts No.** werden nicht geliefert.

NO. 28

Ref. No.	Add-ress	New Parts	Parts No.	Description	Desti-nation	Re-marks
Q9 -24			2SA1576	TRANSISTOR	YM	4
Q9 -24			2SA1576	TRANSISTOR	M	2
Q10 -24			2SA1576	TRANSISTOR		3
Q10 -24			2SA1576	TRANSISTOR		4
Q10 -24			2SA1576	TRANSISTOR		1
Q301,302			2SC1845(F,E)	TRANSISTOR		3
Q301,302			2SC1845(F,E)	TRANSISTOR		4
Q301,302			2SC1845(F,E)	TRANSISTOR	M	2
Q303-306			2SC2878(B)	TRANSISTOR		
Q307-310			2SC1845(F,E)	TRANSISTOR		
Q311,312			2SA992(F,E)	TRANSISTOR		
Q313			2SA1048(Y,GR)	TRANSISTOR		
Q313			2SA1175(F,E)	TRANSISTOR		
Q313			2SA1309A(Q,R)	TRANSISTOR		
Q313			2SA933S(Q,R)	TRANSISTOR		
A1			W02-1174-05	ELECTRIC CIRCUIT MODULE		
A1			W02-1191-05	ELECTRIC CIRCUIT MODULE		
RECORD/ PLAY BACK UNIT (X28-)						
C1 ,2			CK45FB1H681K	CERAMIC 680PF K		
C3 ,4			CE04LW1V100M	ELECTRO 10UF 35WV		
C5 ,6			CK45FB1H391K	CERAMIC 390PF K		
C7 ,8			CE04LW1C470M	ELECTRO 47UF 16WV		
C9 ,10			CQ93FMG1H153J	MYLAR 0.015UF J		
C11 ,12			CK45FB1H222K	CERAMIC 2200PF K		
C13 -16			CC45FSL1H221J	CERAMIC 220PF J		
C19 ,20			CK45FB1H681K	CERAMIC 680PF K		
C21 ,22			CE04LW1V100M	ELECTRO 10UF 35WV		
C23 ,24			CK45FB1H391K	CERAMIC 390PF K		
C25 ,26			CE04LW1C470M	ELECTRO 47UF 16WV		
C27 ,28			CQ93FMG1H223J	MYLAR 0.022UF J		
C29 ,30			CK45FB1H682K	CERAMIC 6800PF K		
C31 ,32			CE04LW1HR47M	ELECTRO 0.47UF 50WV		
C33 ,34			CQ93FMG1H333J	MYLAR 0.033UF J		
C35 ,36			CK45FB1H222K	CERAMIC 2200PF K		
C37 -40			CE04LW1H010M	ELECTRO 1.0UF 50WV		
C41 ,42			CQ93FMG1H393J	MYLAR 0.039U F J		
C43 ,44			CE04LW1H0R1M	ELECTRO 0.1UF 50WV		
C45 ,46			CE04LW1V100M	ELECTRO 10UF 35WV		
C47 ,48			CE04LW1HR47M	ELECTRO 0.47UF 50WV		
C49 ,50			CE04LW1H010M	ELECTRO 1.0UF 50WV		
C51 ,52			CE04LW1A101M	ELECTRO 100UF 10WV		
C53 ,54			CE04LW1H2R2M	ELECTRO 2.2UF 50WV		
C55 ,56			C91-1436-05	FILM 220PF J		
C57 ,58			C91-1434-05	FILM 150PF J		
C59 -62			CK45FF1H223Z	CERAMIC 0.022UF Z		
C63 ,64			CK45FB1H561K	CERAMIC 560PF K		
C65 ,66			CK45FF1H103Z	CERAMIC 0.010UF Z		
C101			CE04LW1H010M	ELECTRO 1.0UF 50WV		
C102			CE04LW1C220M	ELECTRO 22UF 16WV		
C103			CE04LW1C101M	ELECTRO 100UF 16WV		
C104			CE04LW1H0R1M	ELECTRO 0.1UF 50WV		
C105			CQ93FMG1H103J	MYLAR 0.010UF J		
C106			CK45FB2H471K	CERAMIC 470PF K		
C107			CQ93HP2A103J	MYLAR 0.010UF J		

L:Scandinavia **K:** USA **P:** Canada **1:** RXD-F41 **2:** RXD-F42
Y: PX(Far East, Hawaii) **T:** England **E:**Europe **3:** RXD-F3 **4:** RXD-F4
Y:AAFES(Europe) **X:** Australia **M:** Other Areas

⚠ indicates safety critical components.

* New Parts
Parts without **Parts No.** are not supplied.
Les articles non mentionnes dans le **Parts No.** ne sont pas fournis.
Teile ohne **Parts No.** werden nicht geliefert.

NO. 29

Ref. No.	Add-ress	New Parts	Parts No.	Description	Desti-nation	Re-marks
C108			CC45FSL2H100D	CERAMIC 10PF D		
C109			CE04LW1V100M	ELECTRO 10UF 35WV		
C110			CQ93FMG1H103J	MYLAR 0.010UF J		
C111,112			CQ93FMG1H562J	MYLAR 5600PF J		
C113			CE04LW1V4R7M	ELECTRO 4.7UF 35WV		
C114,115			CK45FF1H103Z	CERAMIC 0.010UF Z		
C116,117			CE04LW1C101M	ELECTRO 100UF 16WV		
C118			CK45FF1H103Z	CERAMIC 0.010UF Z		
C119			CC45FSL1H271J	CERAMIC 270PF J		
C120			CC45FSL1H271J	CERAMIC 270PF J		
CN1			E40-3247-05	PIN ASSY		
CN2			E40-3249-05	PIN ASSY		
CN3 ,4			E40-4609-05	PIN ASSY		
CN5			E40-0512-05	PIN ASSY		
CN6			E40-4804-05	SOCKET FOR PIN ASSY		
L1 -4			L40-1035-20	SMALL FIXED INDUCTOR(10MH,J)		
L5 ,6			L79-1201-05	LC FILTER		
L7 ,8			L32-0547-05	BIAS OSCILATING COIL		
L9			L32-0570-05	BIAS OSCILATING COIL		
⚠ R120			RD14NB2E100J	RD 10 J 1/4W		
⚠ R165			RD14NB2E100J	RD 10 J 1/4W		
VR1 ,2			R12-0606-05	TRIMMING POT.(330)		
VR3 ,4			R12-0605-05	TRIMMING POT.(220)		
VR7 ,8			R12-1619-05	TRIMMING POT.(4.7K)		
VR52			R12-1619-05	TRIMMING POT.(4.7K)		
K1			S51-2089-05	MAGNETIC RELAY		
K1			18-05	MAGNETIC RELAY		
D1 ,2			HSS104	DIODE		
D1 ,2			1SS133	DIODE		
D4 -6			HSS104	DIODE		
D4 -6			1SS133	DIODE		
D7			RD2.7ES(B2)	ZENER DIODE		
D7			UZ-2.7BSB	ZENER DIODE		
D8			HSS104	DIODE		
D8			1SS133	DIODE		
IC1 ,2			TA8125S	IC(2CH PRE AMP)		
IC3			HA12182F	ANALOGUE IC		
IC4			UPC1297CA	IC(DOL HX PRO SYSTEM)		
IC5			BA10393	IC(DUAL COMPALATOR)		
IC6 ,7			BU4094BC	MOS-IC		
Q1 ,2			DTC124ES	DIGITAL TRANSISTOR		
Q1 ,2			UN4212	TRANSISTOR		
Q3 ,4			2SD1302(S,T)	TRANSISTOR		
Q3 ,4			2SD1450(S,T)	TRANSISTOR		
Q51			DTC124ES	DIGITAL TRANSISTOR		
Q51			UN4212	TRANSISTOR		
Q52			2SC1740S(Q,R)	TRANSISTOR		
Q52			2SC2458(Y,GR)	TRANSISTOR		
Q52			2SC2785(F,E)	TRANSISTOR		
Q52			2SC3311A(Q,R)	TRANSISTOR		
Q53			DTA124ES	DIGITAL TRANSISTOR		
Q53			UN4112	TRANSISTOR		
Q54 ,55			2SC1845(F,E)	TRANSISTOR		

L:Scandinavia **K:** USA **P:** Canada **1:** RXD-F41 **2:** RXD-F42
Y: PX(Far East, Hawaii) **T:** England **E:**Europe **3:** RXD-F3 **4:** RXD-F4
Y:AAFES(Europe) **X:** Australia **M:** Other Areas

⚠ indicates safety critical components.

* New Parts
Parts without **Parts No.** are not supplied.
Les articles non mentionnes dans le **Parts No.** ne sont pas fournis.
Teile ohne **Parts No.** werden nicht geliefert.

NO. 30

Ref. No.	Add-ress	New Parts	Parts No.	Description	Desti-nation	Re-marks
Q56 ,57			2SC1740S(Q,R)	TRANSISTOR		
Q56 ,57			2SC2458(Y,GR)	TRANSISTOR		
Q56 ,57			2SC2785(F,E)	TRANSISTOR		
Q56 ,57			2SC3311A(Q,R)	TRANSISTOR		
⚠ Q58			2SC3940A(R,S)	TRANSISTOR		
Q59			2SC1740S(Q,R)	TRANSISTOR		
Q59			2SC2458(Y,GR)	TRANSISTOR		
Q59			2SC2785(F,E)	TRANSISTOR		
Q59			2SC3311A(Q,R)	TRANSISTOR		
Q60			2SA992(F,E)	TRANSISTOR		
Q61			DTC124ES	DIGITAL TRANSISTOR		
Q61			UN4212	TRANSISTOR		
Q63 -65			2SC3246	TRANSISTOR		
CD PLAYER UNIT (X32-)						
C1			CQ93FMG1H103J	MYLAR 0.010UF J		
C2			CQ93FMG1H472J	MYLAR 4700PF J		
C3			CC45FSL1H470J	CERAMIC 47PF J		
C4			CF92FV1H474J	MF-C 0.47UF J		
C5			CE04LW1A101	M ELECTRO 10UF 10WV		
C6			CQ93FMG1H104J	MYLAR 0.10UF J		
C7			CE04HW1H2R2M	NP-ELEC 2.2UF 50WV		
C8			CQ93FMG1H104J	MYLAR 0.10UF J		
C9			CQ93FMG1H333J	MYLAR 0.033UF J		
C10			CC45FSL1H101J	CERAMIC 100PF J		
C11			CQ93FMG1H102J	MYLAR 1000PF J		
C12			CC45FSL1H221J	CERAMIC 220PF J		
C13			CQ93FMG1H473J	MYLAR 0.047UF J		
C14			CE04LW1V100M	ELECTRO 10UF 35WV		
C15			CE04HW1E100M	NP-ELEC 10UF 25WV		
C16 -18			CQ93FMG1H103J	MYLAR 0.010UF J		
C19			CQ93FMG1H333J	MYLAR 0.033UF J		
C20			CE04LW0J331M	ELECTRO 330UF 6.3WV		
C21			CK45FF1H103Z	CERAMIC 0.010UF Z		
C22			CE04LW1A101M	ELECTRO 10UF 10WV		
C23			CF92FV1H224J	MF-C 0.22UF J		
C24 ,25			CE04LW1A101M	ELECTRO 100UF 10WV		
C26			CC45FSL1H270J	CERAMIC 27PF J		
C27			CQ93FMG1H222J	MYLAR 2200PF J		
C28			CQ93FMG1H333J	MYLAR 0.033UF J		
C29			CQ93FMG1H103J	MYLAR 0.010UF J		
C30			CQ93FMG1H222J	MYLAR 2200PF J		
C35 ,36			CE04HW1H010M	NP-ELEC 1.0UF 50WV		
C37			CE04LW1A470M	ELECTRO 47UF 10WV		
C38			CQ93FMG1H332J	MYLAR 3300PF J		
C39			CK45FF1H103Z	CERAMIC 0.010UF Z		
C40			CQ93FMG1H473J	MYLAR 0.047UF J		
C41			CQ93FMG1H152J	MYLAR 1500PF J		
C42			CQ93FMG1H103J	MYLAR 0.010UF J		
C43			CE04LW1HR47M	ELECTRO 0.47UF 50WV		
C45			CE04LW0J331M	ELECTRO 330UF 6.3WV		
C46			CE04LW1A470M	ELECTRO 47UF 10WV		
C55			CE04LW0J331M	ELECTRO 330UF 6.3WV		
C56			CE04LW1A331M	ELECTRO 330UF 10WV		
C57 ,58			CC45FSL1H221J	CERAMIC 220PF J		

L:Scandinavia **K:** USA **P:** Canada **1:** RXD-F41 **2:** RXD-F42
Y: PX(Far East, Hawaii) **T:** England **E:**Europe **3:** RXD-F3 **4:** RXD-F4
Y:AAFES(Europe) **X:** Australia **M:** Other Areas

⚠ indicates safety critical components.

RXD-F3/F4/F41/F42

PARTS LIST

✱ New Parts
Parts without **Parts No.** are not supplied.
Les articles non mentionnes dans le **Parts No.** ne sont pas fournis.
Teile ohne **Parts No.** werden nicht geliefert.

NO. 31

Ref. No.	Add-ress	New Parts	Parts No.	Description	Desti-nation	Re-marks
C59 -62			CQ93FMG1H391K	MYLAR 390PF K		
C63 ,64			CQ93FMG1H222J	MYLAR 2200PF J		
C65 ,66			CE04LW1H010M	ELECTRO 1.0UF 50WV		
C67			CE04LW1A101M	ELECTRO 100UF 10WV		
C68 ,69			CE04LW1A471M	ELECTRO 470UF 10WV		
C70			CE04LW1HR47M	ELECTRO 0.47UF 50WV		
C71			CE04LW1A470M	ELECTRO 47UF 10WV		
C72			CE04LW1C470M	ELECTRO 47UF 16WV		
C73			CK45FF1H223Z	CERAMIC 0.022UF Z		
C74 ,75			CE04LW1V100M	ELECTRO 10UF 35WV		
C76			CC45FSL1H331J	CERAMIC 330PF J		
C77			CC45FSL1H271J	CERAMIC 270PF J		
C79 -82			CK45FF1H223Z	CERAMIC 0.022UF Z		
CN1	1I		E40-4856-05	FLAT CABLE CONNCTOR		
CN2			E40-0711-05	PIN ASSY		
CN3			E40-4377-05	PIN ASSY		
CN4			E40-4763-05	PIN ASSY		
CN5			E40-3247-05	PIN ASSY		
CN6			E40-4762-05	PIN ASSY		
CN7	1J		E40-4173-05	FLAT CABLE CONNCTOR		
			J11-0098-05	WIRE CLAMPER		
L1			L40-1001-17	SMALL FIXED INDUCTOR(10UH,K)		
X1			L78-0299-05	RESONATOR (16.93M)		
VR1			R12-3688-05	TRIMMING POT.(47K)		
VR3			R12-3685-05	TRIMMING POT.(10K)		
VR4			R12-3687-05	TRIMMING POT.(33K)		
D1 -6			HSS104	DIODE		
D1 -6			1SS133	DIODE		
D7			HZS3.3N(B2)	ZENER DIODE		
D7			MTZJ3.3(B)	ZENER DIODE		
D7			RD3.3ES(B2)	ZENER DIODE		
D10 ,11			HSS104	DIODE		
D10 ,11			1SS133	DIODE		
IC1			CXA1782BQ	MOS-IC		
IC2		✱	CXD2508AQ	MOS-IC		
IC3			BA6398FP	ANALOGUE IC		
IC4 ,5			TA8409S	IC(MOTOR CONTROL)		
IC6		✱	BU4094BC	MOS-IC		
IC7			NJM2100D	ANALOGUE IC		
IC8			M5237L	ANALOGUE IC		
Q1			2SC1740S(Q,R)	TRANSISTOR		
Q1			2SC2458(Y,GR)	TRANSISTOR		
Q1			2SC2785(F,E)	TRANSISTOR		
Q1			2SC3311A(Q,R)	TRANSISTOR		
Q2			2SA954(L,K)	TRANSISTOR		
Q3			DTA124ES	DIGITAL TRANSISTOR		
Q3			UN4112	TRANSISTOR		
Q4			2SA954(L,K)	TRANSISTOR		
Q5			2SC1740S(Q,R)	TRANSISTOR		
Q5			2SC2458(Y,GR)	TRANSISTOR		
Q5			2SC2785(F,E)	TRANSISTOR		
Q5			2SC3311A(Q,R)	TRANSISTOR		

L:Scandinavia **K:** USA **P:** Canada **1:** RXD-F41 **2:** RXD-F42
Y: PX(Far East, Hawaii) **T:** England **E:**Europe **3:** RXD-F3 **4:** RXD-F4
Y:AAFES(Europe) **X:** Australia **M:** Other Areas
⚠ indicates safety critical components.

✱ New Parts
Parts without **Parts No.** are not supplied.
Les articles non mentionnes dans le **Parts No.** ne sont pas fournis.
Teile ohne **Parts No.** werden nicht geliefert.

NO. 32

Ref. No.	Add-ress	New Parts	Parts No.	Description	Desti-nation	Re-marks
⚠ Q6			2SA1534A(R,S)	TRANSISTOR		
Q7			DTC124ES	DIGITAL TRANSISTOR		
Q7			UN4212	TRANSISTOR		
Q8			2SB1375	TRANSISTOR		
Q8			2SB1565(E,F)	TRANSISTOR		
Q9 ,10			2SA1048(Y,GR)	TRANSISTOR		
Q9 ,10			2SA1175(F,E)	TRANSISTOR		
Q9 ,10			2SA1309A(Q,R)	TRANSISTOR		
Q9 ,10			2SA933S(Q,R)	TRANSISTOR		
Q11 ,12			2SC2878(B)	TRANSISTOR		
CD MECHANISM (D40-1412-08)						
101	3B		A10-3119-08	CHASSIS (MAIN)		
102	3A	✱	A15-0089-08	FRAME (MD-B)		
105	2A	✱	D10-3533-08	SLIDER (LIFT)		
107	2B		D10-3459-08	LEVER (LOCK)		
108	2A		D10-3460-08	LEVER (BRAKE)		
109	2B		D10-3496-08	FRICTION ARM ASSY		
110	2A		D10-3606-08	FEED SHAFT		
113	1A		D13-1599-08	GEAR (IDLER)		
114	2B		D13-1600-08	GEAR (LOAD)		
115	2B		D13-1601-08	GEAR (CENTER)		
117	3A		D13-1603-08	CAM GEAR(UP/DOWN)		
118	1A		D13-1604-08	GEAR (HELICAL)		
119	2A		D13-1720-08	GEAR		
120	2B,3B		D14-0361-08	ROLLER (TRAY)		
122	2B		D15-0366-08	PULLEY (LOAD)		
123	2B		D16-0363-08	DRIVE BELT		
125	2B		D21-1762-08	SHAFT (PULLEY)		
132	1B,2B		E35-0811-08	3P WIRE		
133	1B,3B	✱	E35-1184-08	6P WIRE		
134	2A,1B	✱	E35-1185-08	6P FLAT WIRE		
135	3A,1B	✱	E35-1186-08	6P WIRE (TU-D)		
136	3A,1B	✱	E35-1187-08	16P FFC		
137	3A		E40-3264-05	CONNECTOR		
140	1A		F07-0732-08	COVER (TRAY)		
141	2B		F07-0736-08	COVER		
145	3A	✱	G01-3806-08	SPRING (MD-G)		
146	3A	✱	G01-3807-08	SPRING (MD-H)		
148	3A		G01-3663-08	SPRING (CAM)		
149	2B		G01-3664-08	SPRING (LOCK)		
150	2A		G01-3665-08	SPRING (BRAKE)		
151	2A		G01-3768-08	SPRING (LEFT)		
152	1A,1B		G16-0821-04	SHEET (TRAY)		
153	3B	✱	G16-0856-08	FILAMENT TAPE		
155	2A	✱	J02-1133-08	INSULATOR		
156	2B		J11-0301-08	CLAMPER		
157	1B	✱	J19-3758-08	BRACKET (CLAMP)		
158	2B		J19-3660-08	BRACKET (GEAR)		
159	2B,3B		J19-3661-08	BRACKET (TRAY)		
160	3A		J61-0081-05	SK BINDER SKB-100		
161	1A		J99-0541-08	TRAY (SLIDE)		
162	1A		J99-0542-08	TRAY (ROTARY)		
L			N09-2658-08	SCREW		

L:Scandinavia **K:** USA **P:** Canada **1:** RXD-F41 **2:** RXD-F42
Y: PX(Far East, Hawaii) **T:** England **E:**Europe **3:** RXD-F3 **4:** RXD-F4
Y:AAFES(Europe) **X:** Australia **M:** Other Areas
⚠ indicates safety critical components.

* New Parts
Parts without **Parts No.** are not supplied.
Les articles non mentionnes dans le **Parts No.** ne sont pas fournis.
Teile ohne **Parts No.** werden nicht geliefert.

NO. 33

Ref. No.	Add-ress	New Parts	Parts No.	Description	Desti-nation	Re-marks
M			N09-3053-08	SCREW		
N			N09-3107-08	SCREW		
P			N09-3140-08	SCREW		
Q			N09-3141-08	SCREW		
165	2B		S33-2061-05	LEVER SWITCH		
166	1A,2A		15-08	LEVER SWITCH JPS1220-0201		
167	3A		38-08	LEAF SWITCH		
170	1B		T50-1055-04	YOKE		
171	1B		T99-0544-05	MAGNET		
DM	3A		A11-1082-08	TT CHASSIS ASSY		
FM	3A		T42-0817-08	MOTOR GEAR (FEED)		
LM	3B		T42-0682-08	MOTOR PULLEY ASSY		
PU	3A		41-05	PICKUP (KSS-213B/S-N)		
RTM	2B		T42-0683-08	MOTOR WORM ASSY		
CASSETTE DECK MECHANISM (D40-1427-08)						
401	2C,3D		A10-3174-08	HEAD CHASSIS		
403	1D,3E	*	A10-3240-08	CHSSIS OUTSART ASSY		
404	1D,2E	*	D01-0184-08	FLYWHEEL (LW) ASSY		
405	1E	*	D01-0185-08	FLYWHEEL (A) ASSY		
406	2F	*	D01-0186-08	FLYWHEEL (B) ASSY		
407	1C		D10-3468-08	INTER LOCK ARM (L)(A DECK)		
408	3F		D10-3469-08	INTER LOCK ARM (R)(B DECK)		
409	2D,3F		D10-3470-08	TRIGGER ARM		
410	2D,3F		D10-3471-08	HEAD CHANGE ARM		
412	1C		D10-3476-08	EJECT LEVER (L) (A DECK)		
413	3E		D10-3477-08	EJECT LEVER (R) (B DECK)		
414	2C,3D		D10-3478-08	SELET LEVER		
415	1D,2E		D10-3479-08	SHIFT LEVER		
416	2C,3D		D10-3480-08	C/R LEVER		
420	3C		D13-0981-08	ROTATION GEAR		
421	1C,2D		D13-1616-08	REW GEAR		
422	2C,2D		D13-1617-08	REEL GEAR		
423	1D,2F		D13-1618-08	IDLER GEAR		
424	3C,3D		D13-1621-08	RETURN GEAR		
425	1D,2E		D13-1622-08	CAM GEAR		
426	2D,3E		D14-0367-08	PINCH ARM (R) ASSY		
427	2C,3D		D14-0368-08	PINCH ARM (L) ASSY		
428	1D,2F		D15-0369-08	IDLER PULLEY		
429	2F	*	D16-0393-08	DRIVE BELT (BW)		
430	1E	*	D16-0392-08	DRIVE BELT (AW)		
431	1E	*	D15-0387-08	PULLEY (A)		
432	1E,2F	*	D16-0391-08	CLUTCH BELT		
433	2C,3D		D19-0270-18	REEL CAP (A)		
434	1C,1E		D19-0287-08	CLUTCH ARM ASSY		
439	1E,1F		E35-0396-08	15P FLAT RIBBON WIRE		
440	3C	*	E35-1242-08	3P HEAD WIRE ASSY (A DECK)		
441	3C	*	E35-1243-08	5P HEAD WIRE ASSY (B DECK)		
442	1F		E35-0986-08	MOTOR WIRE		
443	3C		G01-3790-08	EARTH SPRING (B)		
444	2D,3F		G01-3712-08	HEAD CHANGE ARM SP		
445	2C,3D		G01-3709-08	B.T SPRING		
446	1C,2D		G01-3710-08	SHIFT LEVER SP		
447	2D,3F		G01-3711-08	TRIGGER ARM SP		

L:Scandinavia **K:** USA **P:** Canada **1:** RXD-F41 **2:** RXD-F42
Y: PX(Far East, Hawaii) **T:** England **E:**Europe **3:** RXD-F3 **4:** RXD-F4
Y:AAFES(Europe) **X:** Australia **M:** Other Areas

⚠ indicates safety critical components.

* New Parts
Parts without **Parts No.** are not supplied.
Les articles non mentionnes dans le **Parts No.** ne sont pas fournis.
Teile ohne **Parts No.** werden nicht geliefert.

NO. 34

Ref. No.	Add-ress	New Parts	Parts No.	Description	Desti-nation	Re-marks
448	2E,3D		G01-3720-08	HEAD RETURN PLAY SP		
449	1C,3F		G01-3713-08	EJECT SP		
450	2C,3D		G01-3714-08	C/R LEVER SP		
451	2C,3D		G01-3715-08	SELECT LEVER SP		
452	2C,3D		G01-3716-08	SHIFT SP		
453	1C		G01-3717-08	INTER LOCK SP (L)		
454	3C,3D		G01-3718-08	RETURN SP		
455	3C,3D		G01-3719-08	FWD SP		
456	2D,3F		G01-3723-08	INTER LOCK SP (R)		
457	2C,3D		G01-3739-08	HEAD CHSSIS SP		
458	2D,3E		G01-3721-08	BRAKE SP (R)		
459	1C,2E		G01-3722-08	BRAKE SP (L)		
460	1C,2E		G01-3724-08	CLUTCH ARM SPRING (B)		
461	1D,2E		G01-3725-08	CLUTCH SP		
462	1C,2D		G02-0913-08	PACK SPRING		
463	3C		G02-1068-08	AZIMUTH SP (B)		
464	2C,3D	*	G02-1071-08	LIFT BKT		
465	3C		G11-2100-08	HEAD WIRE CLAMP		
466	1D,2F		G11-2205-08	TUBE		
467	2D,3E		G16-0791-08	REFLECT SEAL		
469	3C		J21-6184-08	HEAD PLATE ASSY		
470	1E,2F		J19-3652-08	CABLE HOLDER		
471	2C,3D		J21-6135-08	HEAD RETURN PLATE		
472	1D	*	J21-6307-08	BKT (B) ASSY		
473	2D	*	J21-6308-08	MECHA BKT		
474	2C,3D		J42-0183-08	REEL BUSH		
475	2D,3E		J69-0086-08	FILAMENT TAPE		
476	3C,3D		J39-0188-08	HEAD BASE		
477	2C,3D		J90-0832-08	SHIFT SPRING GUIDE		
AA			N19-1316-08	POLY WASHER		
AB			N19-1354-08	POLY WASHER		
AC			N19-1288-08	POLY WASHER		
AD			N19-1355-08	NYLON WASHER		
AE			N19-1385-08	POLY WASHER		
AF			N19-1386-08	POLY WASHER		
AG			N19-1387-08	TEFRON WASHER		
AH			N19-1388-08	POLY WASHER		
AK			N19-1035-08	POLY WASHER		
AL		*	N19-1396-08	POLY WASHER		
AM			N19-1384-08	POLY WASHER		
S			N09-1497-08	TAP TITE SCREW		
T			N09-2871-08	TAPPING SCREW		
U			N09-2876-08	HEAD SCREW (RVS)		
V			N09-3135-08	BIND TAP TITE SCREW		
W		*	N09-3195-08	TAP TITE SCREW		
Y			N09-2901-08	BIND TAP TITE SCREW		
Z			N09-3112-08	AZIMUTH SCREW		
480	1E,2F		S74-0033-08	REC SWITCH		
481	1E,2F		S74-0042-08	PLAY SWITCH		
484	1E,2F		T94-0233-08	SOLENOID ASSY		
485	1E,2F		T95-0125-08	PHOTO INTERRUPTER		
MM	2F	*	T42-0813-08	MOTOR ASSY		
PH	2C		T31-0066-08	PLAYBACK HEAD MK10P-AB215		
RPEH	3C		R/P ERASE	HEAD YK56R-AA405		

L:Scandinavia **K:** USA **P:** Canada **1:** RXD-F41 **2:** RXD-F42
Y: PX(Far East, Hawaii) **T:** England **E:**Europe **3:** RXD-F3 **4:** RXD-F4
Y:AAFES(Europe) **X:** Australia **M:** Other Areas

⚠ indicates safety critical components.

RXD-F3/F4/F41/F42

SPECIFICATIONS

Amplifier section

Rated power output

54 watts per channel minimum RMS. both channels driven, at 6Ω, 1 kHz with no more than 10 % total harmonic distortion.

Input sensitivity / Impedance
- AUX 200mV/47kΩ
- MIC 2.4mV/2.2kΩ

Signal to noise ratio
- AUX .....86dB(IHF'66)

FM tuner section

Tuning frequency range .....87.5MHz ~ 108MHz
Sensitivity (IHF) .....13.2dBf(1.2μV at 75Ω)

AM Tuner section

Tuning frequency range
- 9kHz step .....531kHz ~ 1,602kHz
- 10kHz step .....530kHz ~ 1,610kHz

Usable sensitivity .....12μV/(500μV/m)

Cassette deck section

Track .....4-track, 2-channel stereo
Recording system.....AC bias system (Frequency: 105 khz)

Heads
- A deck Playback head.....1
- B deck Playback /recording head 1
- Erasing head.....1

Motors 1
Fast winding time.....Approx. 120 seconds (C-60 tape)

CD player section

Laser .....Semiconductor laser
Playing rotation .....200 rpm ~ 500 rpm (CLV)
Wow & Flutter.....Unmeasurable Limit

General

Power consumption .....150 W
Dimensions .....W : 270mm
H : 305mm
D : 341mm
Weight (net) 8kg

Note:
Component and circuity are subject to modification to insure best operation under differing local conditions. This manual is based on the U.S.A. (K) standard, and provides information on regional circuit modification through use of alternate schematic diagrams, and information on regional component variations through use of parts list.

KENWOOD follows a policy of continuous advancements in development. For this reason specifications may be changed without notice.

KENWOOD CORPORATION
14-6,Dogenzaka 1-chome, Shibuya-ku, Tokyo, 150 Japan

KENWOOD SERVICE CORPORATION
P.O BOX 22745, 2201 East Dominguez St., Long Beach, CA 90801-5745, U.S.A.

KENWOOD ELECTRONICS CANADA INC.
6070 Kestrel Road, Mississauga, Ontario, Canada L5T 1S8

KENWOOD ELECTRONICS LATIN AMERICA S.A.
P.O BOX 55-2791, Piso 6 plaza Chase, Cl. 47 y Aquilino de la Guardia Panama, Republic de Panama

TRIO-KENWOOD U.K. LIMITED
KENWOOD House, Dwight Road, Watford, Herts., WD1 8EB., United Kingdom

KENWOOD ELECTRONICS BENELUX N.V.
Meachelsesteenweg 418, B-1930 Zaventem, Belgium

KENWOOD ELECTRONICS DEUTSCHLAND GMBH
Rembrücker Str. 15, 63150 Heusenstamm, Germany

TRIO-KENWOOD FRANCE S.A.
13 Boulevard Ney, 75018 Paris, France

KENWOOD ELECTRONICS ITALIA S.p.A.
Via G. Sirtori, 7/9 20129, Milano, Italy

KENWOOD IBERICA S.A.
Bolivia, 239-08020 Barcelona, Spain

KENWOOD ELECTRONICS AUSTRALIA PTY. LTD. (A.C.N. 001499 074)
P.O Box 504, 8 Figtree Drive, Australia Centre, Homebush, N.S.W. 2140, Australia

KENWOOD & LEE ELECTRONICS, LTD.
Unit 3712-3724, Level 37, Tower 1, Metroplaza, 223 Hing Fong Road, Kwai Fong N.T., Hong Kong

KENWOOD ELECTRONICS SINGAPORE PTE LTD.
No. 1 Genting Lane # 07-00, KENWOOD Building, Singapore, 1334

KENWOOD ELECTRONICS (MALAYSIA) SDN BHD
10th Floor, Block B, Wisma Semantan, No. 12 Janlan Gelenggang, Bukit Damansara, 50490 Kuala Lumpur, Malaysia

COMPACT DISC STEREO SYSTEM

RXD-C3/C3L

SERVICE MANUAL

(UD-302 main unit)

KENWOOD

© 1994-5 PRINTED IN JAPAN
B51-4869-00(S) 3941

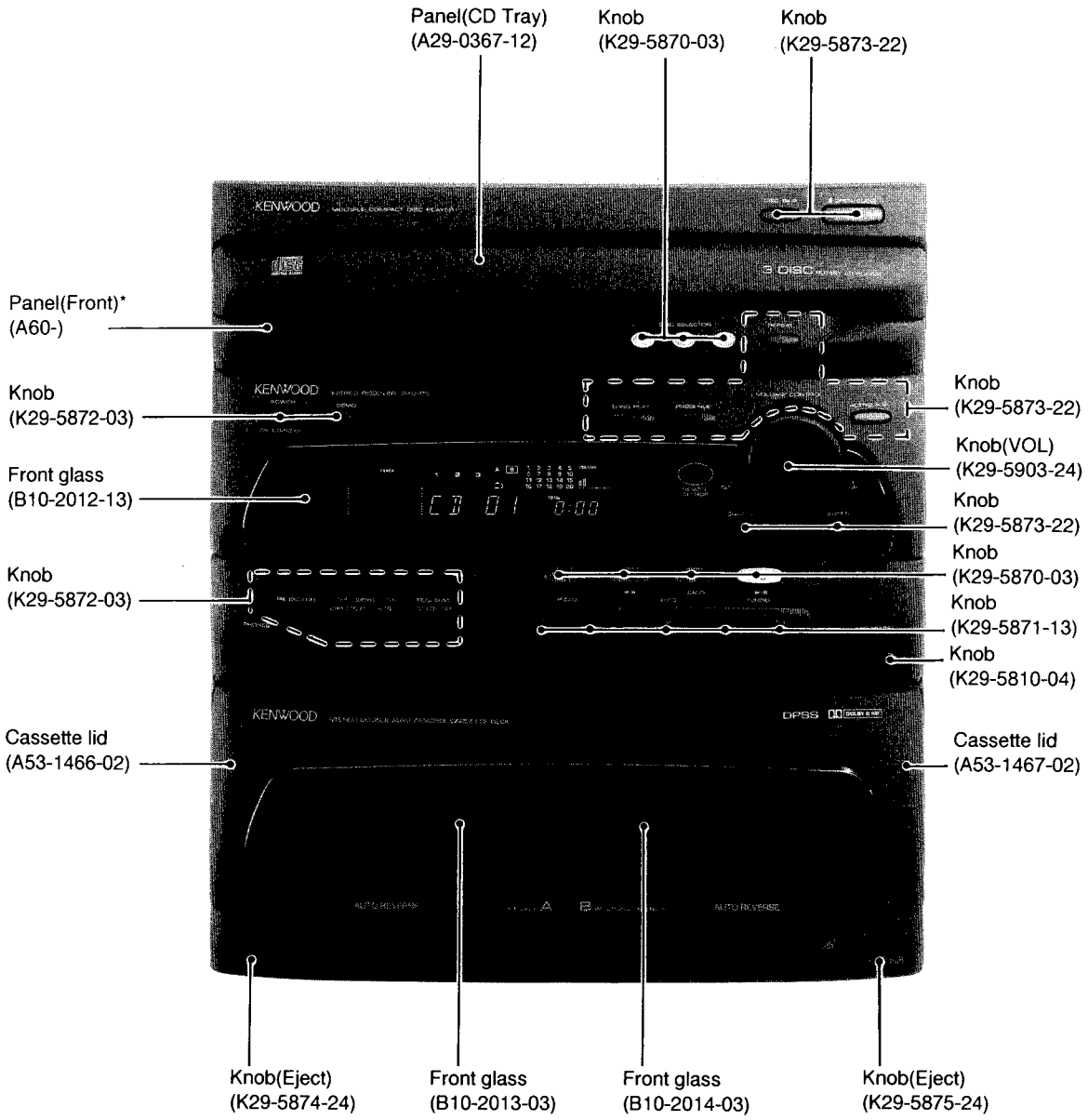

*Refer to parts list on page 67.

RXD-C3/C3L

CONTENTS/ACCESSORIES

SYSTEM CONFIGURATION 2
ACCESSORIES 2
REMOTE CONTROL UNIT 4
DISASSEMBLY FOR REPAIR 5
BLOCK DIAGRAM 7
CIRCUIT DESCRIPTION 9
CD microprocessor : µPD78012BGC-620 10
Receiver/ Deck microprocessor :
M38197MA-077FP 13
CD MECHANISM DESCRIPTION 18
CASSETTE MECHANISM 21
ADJUSTMENT
CD section 28
CASSETTE DECK section 30
TUNER section 32
AJUSTE
CD seccíon 29
CASSETTE DECK seccíon 31
TUNER seccíon 33
WIRING DIAGRAM 35
PC BOARD(Component Side View) 37
SCHEMATIC DIAGRAM 43
EXPLODED VIEW(CD MECHANISM) 63
EXPLODED VIEW
(CASSETTE DECK MECHANISM) 64
EXPLODED VIEW(MAIN UNIT) 65
PARTS LIST 67
SPECIFICATIONS ..... BACK COVER

System configuration

SYSTEM NAME	MAIN UNIT	SPEAKER
UD-302	RXD-C3/C3L	LS-C3

Accessories

AM loop antenna assy .....(1)
(T90-0195-05)

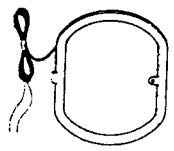

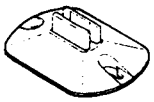

Loop antenna stand
(J19-3645-05)

FM indoor antenna .....(1)
(T90-0175-05)

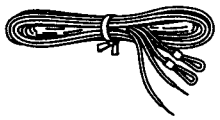

AC plug adaptor .....(1)
(Except for the U.S.A., Canada, Mexico, Europe, U.K. and Australia)
(E03-0115-05)

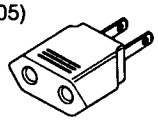

Antenna adaptor
(75Ω/300Ω) .....(1)
(For U.K. and Europe)
(T90-0185-05)

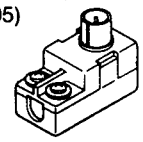

Batteries(R6/AA) .....(2)

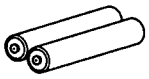

Remote control unit .....(1)
(A70-0978-05)

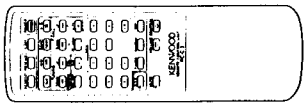

Battery cover : (A09-0170-08)

For the unit with a European AC plug in areas other than Europe.

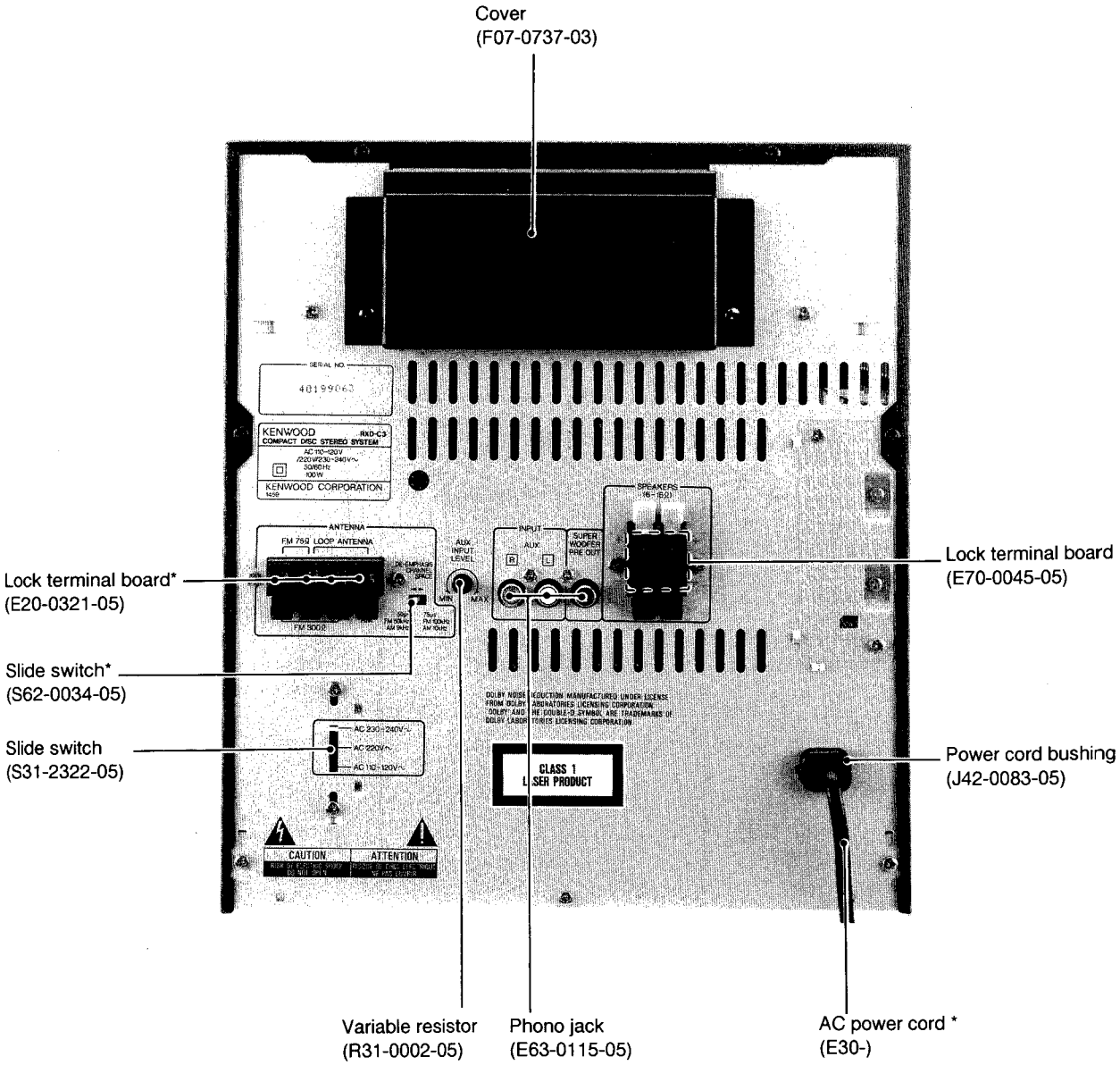

*Refer to parts list on page 67.

RXD-C3/C3L

REMOT CONTROL UNIT

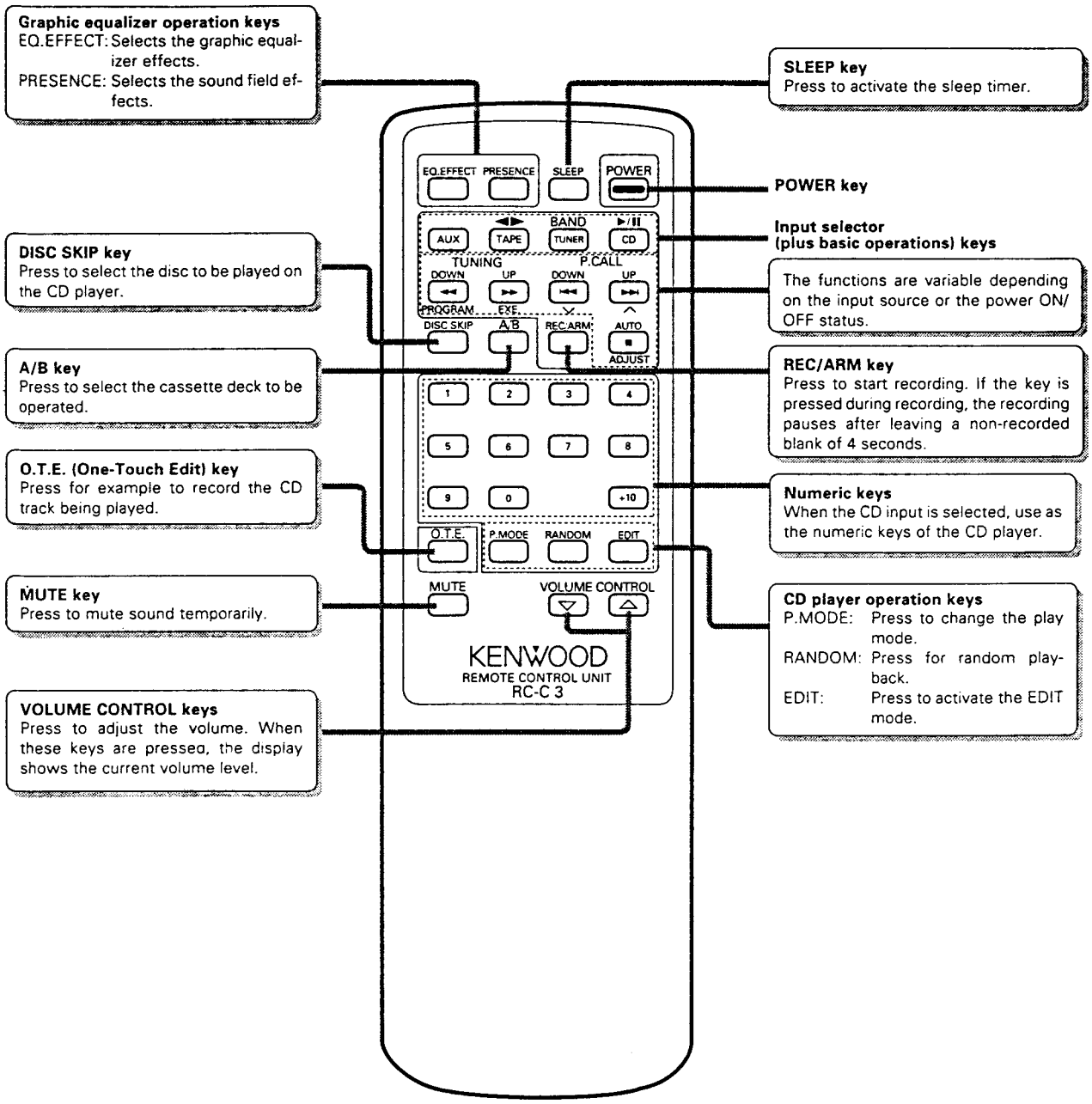

DISASSEMBLY FOR REPAIR

Removing the CD player

1. While pulling forward (toward you) on (❶)on the left and right sides of the CD player front cover, lift it upward and remove it. Remove the four CD mechanism attachment screws (❷) (front left and right) and the two rear panel screws(❸) .
2. Remove the 2 screws(❹) of CD rear panel cover and remove the cover.
3. Remove the CN201etc. main unit, remove the CD mechanism from the main unit and place it atop the table.
4. Remove the two cover screws(❺)in the bottom of the CD player, remove the cover, remove (pull out) the CN201 lead wires from tab(❻). (Connect CN201etc. while doing repairs.)

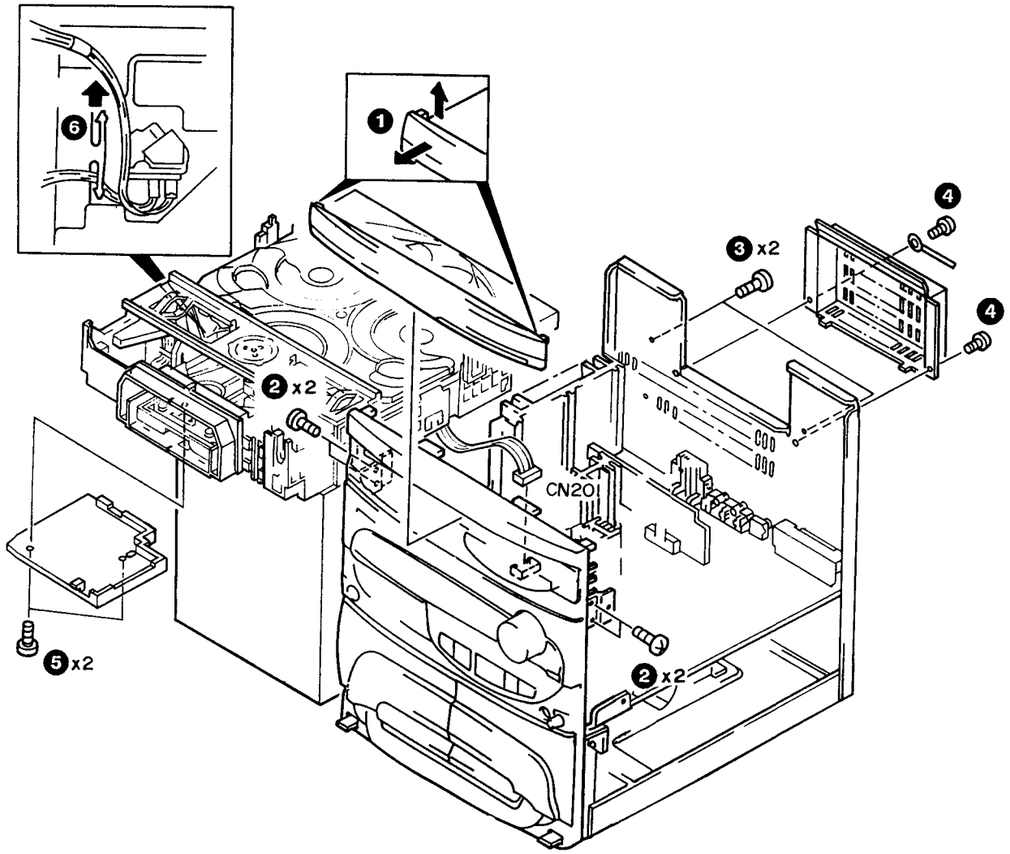

DISASSEMBLY FOR REPAIR

Removing the cassette mechanism and the PC board(X29-).

5. Remove the six rear panel screws(❼), the radiator's two cover screws (❽) and two attachment screws (❾).
6. Remove the three bottom plate screws(❿).
7. Remove the eight cassette mechanism A, B attachment screws(⓫).
8. Open the A, B cassette doors, remove the MIC MIXING knob and remove the two screws (⓬) holding the PC board.
9. Depress both microphone jack tabs (pliers are convenient) and remove the PC board toward the rear panel direction while moving it back and forth (i.e., left and right).

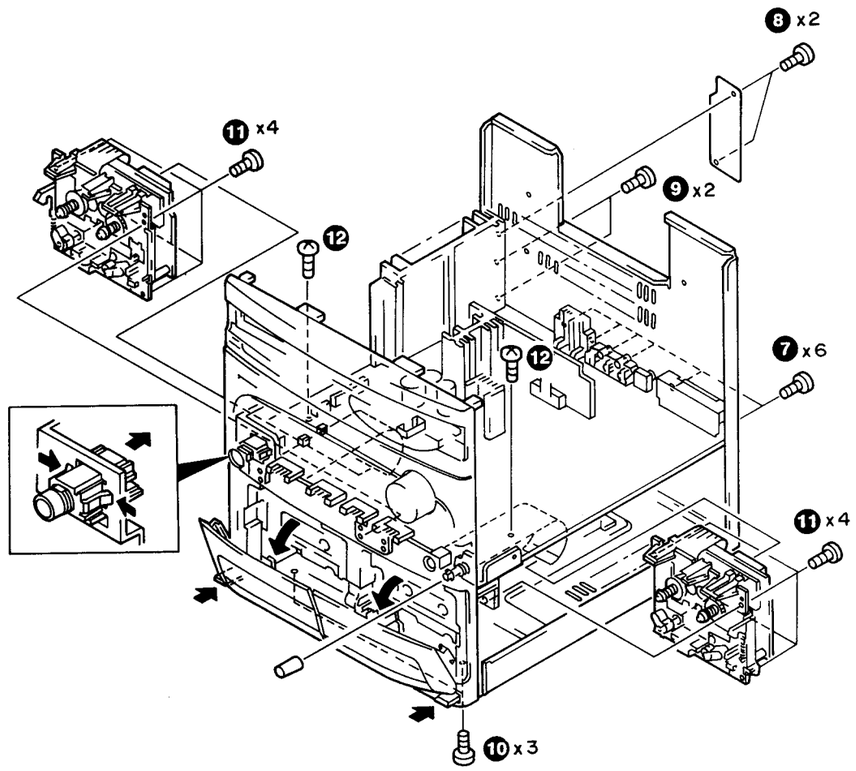

RXD-C3/C3L RXD-C3/C3L

BLOCK DIAGRAM

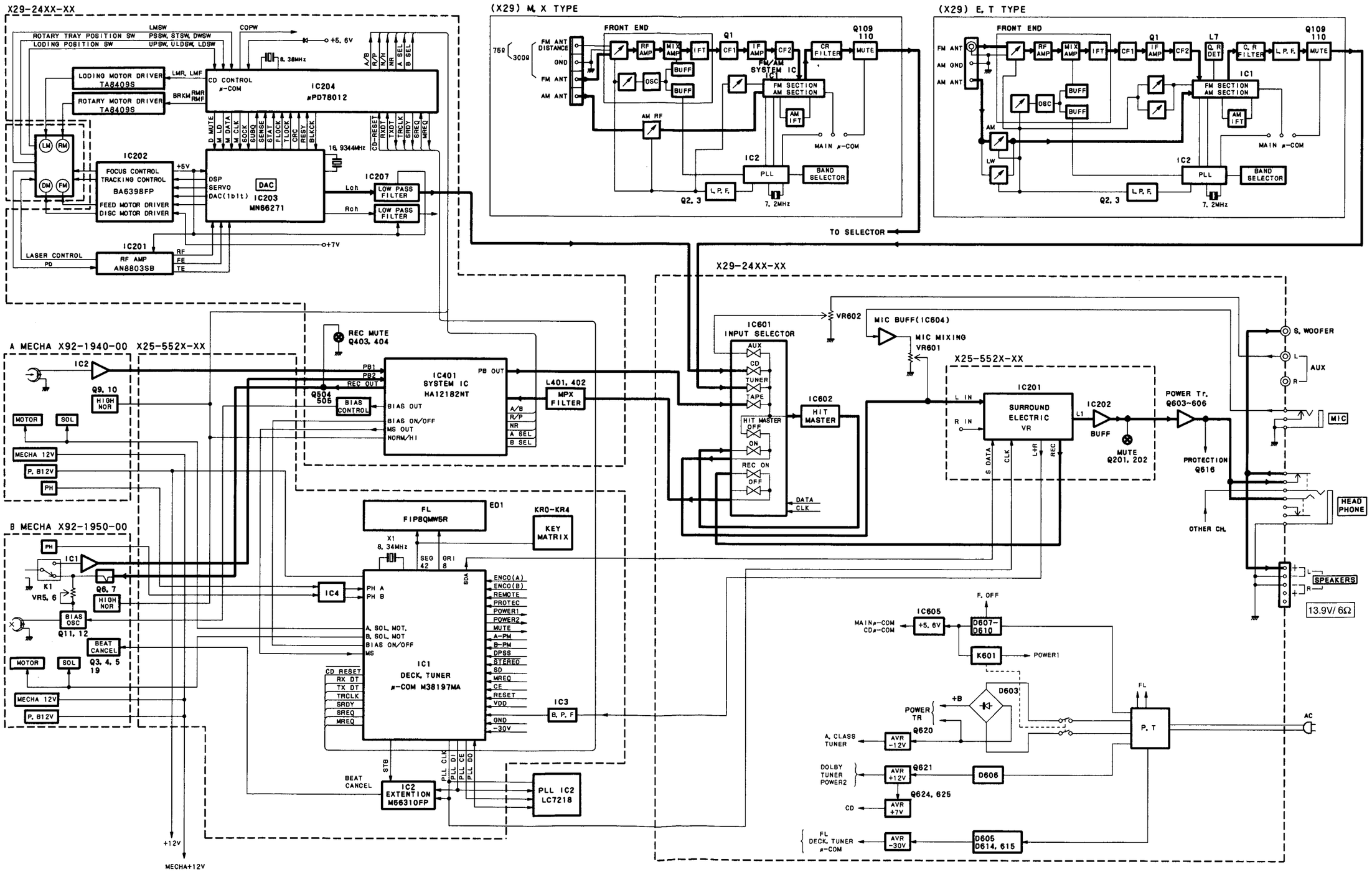

CIRCUIT DESCRIPTION

Microproccesor periphery block diagram

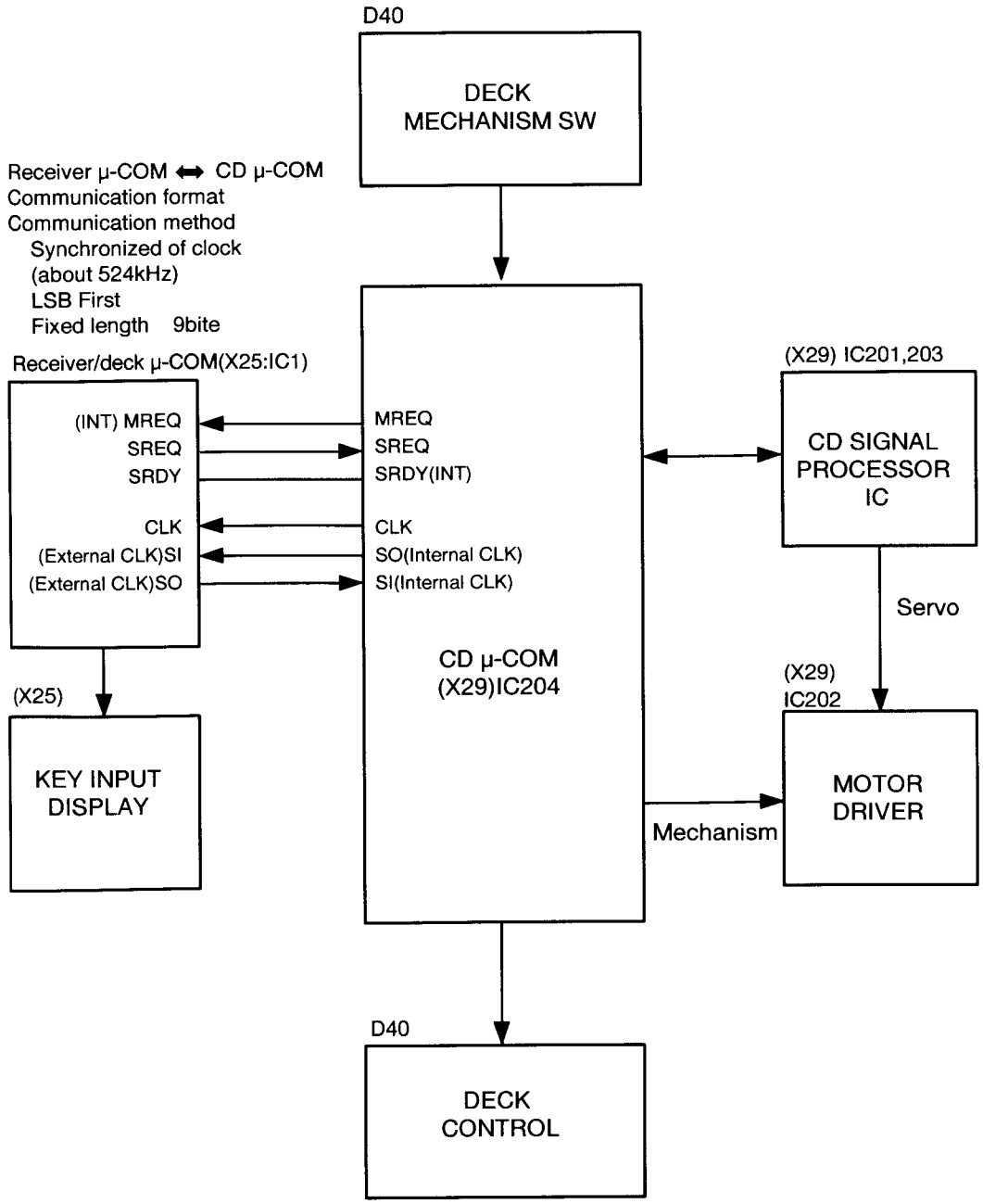

CIRCUIT DESCRIPTION

CD microprocessor : μPD78012BGC-620(X29 : IC204)

Pin connection diagram

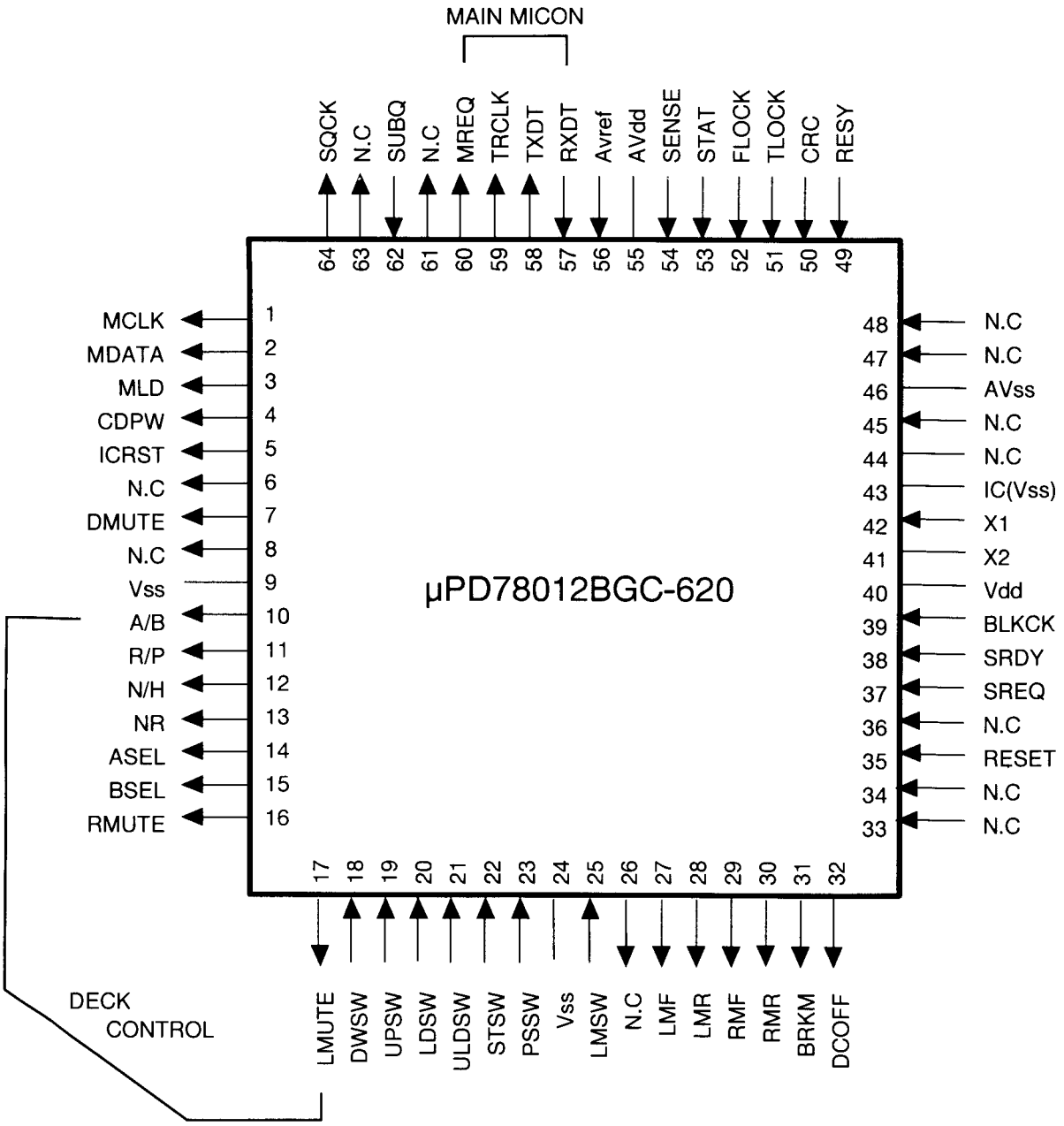

N.C : PULL DOWN

CIRCUIT DESCRIPTION

Pin description

Pin No.	Name	I/O	Description
1	MLCK	O	Signal processing IC clock
2	MDATA	O	Signal processing IC data
3	MLD	O	Signal processing IC latch
4	CDPW	O	Signal processing IC power regulation
5	ICRST	O	Signal processing IC reset
6	N.C	O	
7	DMUTE	O	Digital mute
8	N.C	O	
9	Vss		
10	A/B	O	Deck regulation A/B switch
11	R/P	O	Deck reguration RECORD/PLAY
12	N/H	O	Deck reguration NORMAL/HIGH
13	NR	O	Deck reguration NOISE REDUCTION
14	ASEL	O	Deck reguration A SELECT
15	BSEL	O	Deck reguration B SELECT
16	RMUTE	O	Deck reguration REC MUTE
17	LMUTE	O	Deck reguration LINE MUTE
18	DWSW	I	Mechanism down switch
19	UPSW	I	Mechanism up switch
20	LDSW	I	Mechanism load switch
21	ULDSW	I	Mechanism unload switch
22	STSW	I	Mechanism stop switch
23	PSSW	I	Mechanism position switch
24	Vss		GND
25	LMSW	I	Mechanism limit switch
26	N.C	O	
27	LMF	O	Load motor forward
28	LMR	O	Load motor rewind
29	RMF	O	Rotary motor forward
30	RMR	O	Rotary motor rewind
31	BRKM	O	Rotary motor deceleration control
32	DCOFF	O	DC servo ON/OFF control
33	N.C	O	
34	N.C	O	
35	RESET		Reset
36	N.C	I	
37	SREQ	I	Microprocessor communications SREQ
38	SRDY	I	Microprocessor communications SRDY
39	BLKCK	I	Q Data synchronization clock
40	Vdd		+5V

CIRCUIT DESCRIPTION

Pin No.	Name	I/O	Description
41	X2	O	Clock(8.38MHz)
42	X1	I	Clock
43	IC		GND
44	N.C		
45	N.C	I	
46	AVss		A/D GND
47	N.C	O	
48	N.C	O	
49	RESY	I	Spindle servo lock signal
50	CRC	I	Q data CRC check signal
51	TLOCK	I	Tracking lock signal
52	FLOCK	I	Focus lock signal
53	STAT	I	Signal processing IC status signal
54	SENSE	I	Signal processing IC sensing signal
55	AVdd		A/D power supply
56	AVref		A/D reference
57	RXDT	I	Microprocessor communications reception data
58	TXDT	O	Microprocessor communications transmission data
59	TRCLK	O	Microprocessor communications clock
60	MREQ	O	Microprocessor communications MREQ
61	N.C	O	
62	SUBQ	I	Q data
63	N.C	O	
64	SQCK	O	Q data clock

TEST MODE

1. CD test mode input method
   While depressing the CD key, plug the power cord into an AC power outlet.

2. Actuation after test mode entry
   a. 1-disc equivalent tray rotation
   b. Disc clamp
   c. TN01, 2, 32 play
   d. Stop

CIRCUIT DESCRIPTION

Receiver/Deck Microprocessor : M38197MA-077FP(X25 : IC1)

1. Pin connection diagram

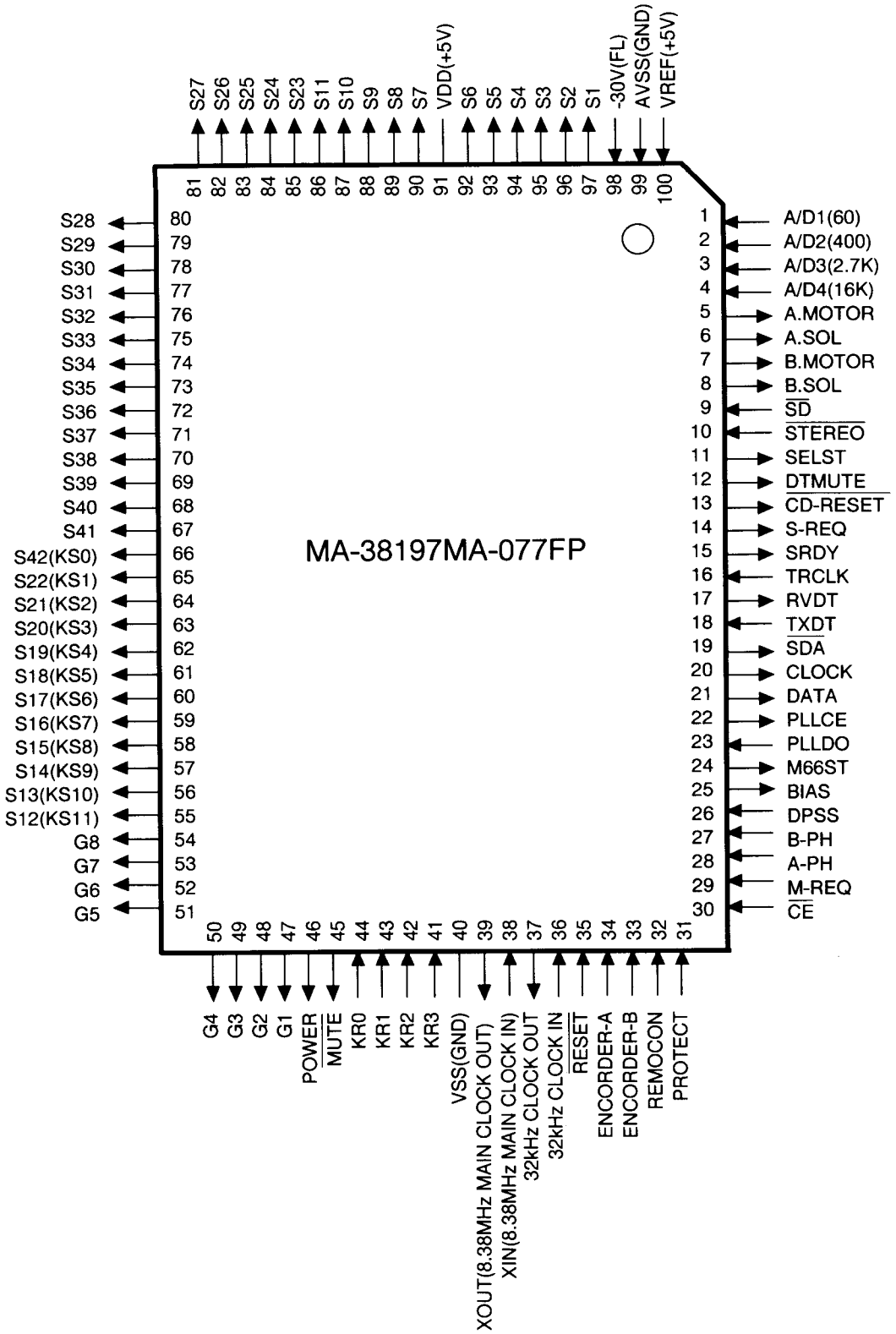

CIRCUIT DESCRIPTION

2. Key Matrix

	KEY RETURN 0 (44)	KEY RETURN 1 (43)	KEY RETURN 2 (42)	KEY RETURN 3 (41)
KS0(66)	POWER ON/STANDBY	—	DEMO	—
KS1(65)		REC/ARM	HIGH	NORMAL
KS2(64)	A/B	DIRECTION	DOLBY NR	ONE TOUCH EDIT
KS3(63)	PACK(A)	CrO_2(A)	PLAY(A)	F • REC • INH
KS4(62)	DSW 0	DSW 1	DSW 2	—
KS5(61)	DISC 1	DISC 2	DISC 3	CD • REPEAT
KS6(60)	DISC • SKIP	OPEN/CLOSE	LONG • PLAY	—
KS7(59)	PACK(B)	CrO_2(B)	PLAY(B)	R • REC • INH
KS8(58)	PRESENCE	EQUALIZER	ENTER	ACTIVE N.B
KS9(57)		■	◀◀	▶▶
KS10(56)	AUX	TAPE	TUNER	CD
KS11(55)	TEST	—	—	—

( ) is Pin No.

3. Pin description

Pin No.	Name	I/O	Description		
1	A/D1(60Hz)	I	Spectrum analyzer 60 Hz analog input		
2	A/D2(400Hz)	I	Spectrum analyzer 400 Hz analog input		
3	A/D(2.7kHz)	I	Spectrum analyzer 2.7 kHz analog input		
4	A/D4(16kHz)	I	Spectrum analyzer 16kHz analog input		
5	A.MOTOR	O	A deck captan motor regulation	H: ON	
6	A.SOL	O	A deck solenoid regulation	H: ON	
7	B.MOTOR	O	B deck captan motor regulation	H: ON	
8	B.SOL	O	B deck solenoid regulation	H: ON	
9	$\overline{SD}$	I	Tuner SD input	L: Tuned	H: Not tuned
10	$\overline{STEREO}$	I	Tuner stereo input	L: Stereo	H: Mono
11	SELST	O	Selector IC (TC9614N) strobe output		
12	DTMUTE	O	Selector IC (TC9614N) data mute		
13	$\overline{CD\text{-}RESET}$	O	CD microprocessor reset signal output	L: Reset	
14	S-REQ	O	Slave transmission request signal output (For receiver↔microprocessor communications)	H: Request	
15	SRDY	O	Transmission signal possible signal output (For receiver↔microprocessor communications)		
16	TRCLK	I	Communications clock input (For receiver↔ microprocessor communications)		
17	RVDT	O	Slave serial data output (For receiver↔ microprocessor communications)		
18	TXDT	I	Master serial data input (For receiver↔ microprocessor communications)		
19	$\overline{SDA}$	O	Surround IC (μPC1853) DATA output		
20	CLOCK	O	Surround IC (μPC1853), Expansion IC (M66310FP), PLL IC (LC7218), Selector IC (TC9164N) Clock output (common-use)		

CIRCUIT DESCRIPTION

Pin No.	Name	I/O	Description
21	DATA	O	Expansion IC (M66310FP), PLL IC (LC7218), Selector IC (TC9164N) DATA output (common-use)
22	PLLCE	O	PLL IC (LC7218) CE output H: Enable L: Disable
23	PLLDO	I	PLL IC (LC7218) IF COUNT input
24	M66ST	O	Expansion IC (M66310FP)strobe output
25	BIAS	O	Bias oscillation regulation H: Oscillation
26	DPSS	I	DPSS (search) sensitivity input L: Detect between tracks H: Detect presence of tracks
27	B-PH	I	B deck photo sensor input
28	A-PH	I	A deck photo sensor input
29	M-RREQ	I	Master transmission request signal output H: Request (For receiver ↔ microprocessor communications)
30	$\overline{CE}$	O	Backup detection L: Backup H: Normal
31	PROTECT	I	Protection detection H: Protect ON L: Normal
32	REMOCON	I	Remote controller input
33	ENCORDER B	I	Rotary encoder input B
34	ENCORDER A	I	Rotary encoder input A
35	$\overline{RESET}$	I	Reset signal input L: Reset
36	XCIN	I	Clock-use clock signal input 32kHz quartz crystal connected
37	XCOUT	O	Clock-use clock signal output 32kHz quartz crystal connected
38	XIN	I	Main clock input 8.38 MHz ceramic oscillator connected
39	XOUT	O	Main clock output 8.38 MHz ceramic oscillator connected
40	VSS		GND connector Connect to GND
41	KR3	I	Key return signal input 3
42	KR2	I	Key return signal input 2
43	KR1	I	Key return signal input 1
44	KR0	I	Key return signal input 0
45	$\overline{MUTE}$	O	Mute regulation L: Mute ON H: Mute OFF
46	POWER	O	Power regulation H: Power ON L: Power OFF
47	G1	O	FL G1 grid drive connector
48	G2	O	FL G2 grid drive connector
49	G3	O	FL G3 grid drive connector
50	G4	O	FL G4 grid drive connector
51	G5	O	FL G5 grid drive connector
52	G6	O	FL G6 grid drive connector
53	G7	O	FL G7 grid drive connector
54	G8	O	FL G8 grid drive connector
55	S12	O	FL S12 segment drive connector and key scan signal output 11
56	S13	O	FL S13 segment drive connector and key scan signal output 10
57	S14	O	FL S14 segment drive connector and key scan signal output 9
58	S15	O	FL S15 segment drive connector and key scan signal output 8
59	S16	O	FL S16 segment drive connector and key scan signal output 7 (B deck common)
60	S17	O	FL S17 segment drive connector and key scan signal output 6
61	S18	O	FL S18 segment drive connector and key scan signal output 5
62	S19	O	FL S19 segment drive connector and key scan signal output 4 (Tuner dispatch)
63	S20	O	FL S20 segment drive connector and key scan signal output 3 (A deck common)

CIRCUIT DESCRIPTION

Pin No.	Name	I/O	Description
64	S21	O	FL S21 segment drive connector and key scan signal output 2
65	S22	O	FL S22 segment drive connector and key scan signal output 1
66	S42	O	FL S42 segment drive connector and key scan signal output 0
67	S41	O	FL S41 segment drive connector
68	S40	O	FL S40 segment drive connector
69	S39	O	FL S39 segment drive connector
70	S38	O	FL S38 segment drive connector
71	S37	O	FL S37 segment drive connector
72	S36	O	FL S36 segment drive connector
73	S35	O	FL S35 segment drive connector
74	S34	O	FL S34 segment drive connector
75	S33	O	FL S33 segment drive connector
76	S32	O	FL S32 segment drive connector
77	S31	O	FL S31 segment drive connector
78	S30	O	FL S30 segment drive connector
79	S29	O	FL S29 segment drive connector
80	S28	O	FL S28 segment drive connector
81	S27	O	FL S27 segment drive connector
82	S26	O	FL S26 segment drive connector
83	S25	O	FL S25 segment drive connector
84	S24	O	FL S24 segment drive connector
85	S23	O	FL S23 segment drive connector
86	S11	O	FL S11 segment drive connector
87	S10	O	FL S10 segment drive connector
88	S9	O	FL S9 segment drive connector
89	S8	O	FL S8 segment drive connector
90	S7	O	FL S7 segment drive connector
91	V_{DD}		Power supply input (+5V)
92	S6	O	FL S6 segment drive connector
93	S5	O	FL S5 segment drive connector
94	S4	O	FL S4 segment drive connector
95	S3	O	FL S3 segment drive connector
96	S2	O	FL S2 segment drive connector
97	S1	O	FL S1 segment drive connector
98	V_{EE}	I	Pull-down power supply input (for FL) Connected to -30V
99	AV_{SS}	I	Analog power supply input Connected to GND
100	V_{REF}	I	A/D converter reference voltage input Connected to +5V

CIRCUIT DESCRIPTION

4. Conditions by Description

Destination Type	Diode switches(DSW) DSW2 D43	DSW1 D40	DSW0 D39	Band	Receiving frequency range	Interchannel space	Intermediate frequency	PLL reference frequency	PLL(X29 : IC2 LA7218) output port ⑨	⑩	⑪	⑫	⑬	⑭	⑮
K1(1700)	0	0	0	FM	87.5~108.0MHz	100kHz	+10.7MHz	25kHz	m	i	H	L	H	H	H
				AM	530~1700kHz	10kHz	+450kHz	10kHz	m	i	H	H	L	H	H
K2(1610)	0	0	1	FM	87.5~108.0MHz	100kHz	+10.7kHz	25kHz	m	i	H	L	H	H	H
				AM	530~1610kHz	10kHz	+450kHz	10kHz	m	i	H	H	L	H	H
E1	0	1	1	FM	87.5~108.0kHz	50kHz	+10.7kHz	25kHz	m	i	H	L	H	H	H
				AM	531~1602kHz	9kHz	+450kHz	9kHz	m	i	H	H	L	H	H
E2(LW)	1	0	0	FM	87.5~108.0MHz	50kHz	+10.7MHz	25kHz	m	i	H	L	H	H	H
				MW	531~1602kHz	9kHz	+450kHz	9kHz	m	i	H	H	L	H	H
				LW	153~279kHz	9kHz	+450kHz	9kHz	m	i	H	H	H	L	H
M	0	X	1	**Change K2/E1 by setting "DSW1" only. (DSW1= 0:K2 Type ; 1:E1 Type)**											

* Diode switch(DSWx) : 0=Without diode(in the case of static, LOW input)
  1=With diode(in the case of static, HIGH input)
  X=Transistor switch(0=OFF/ 1=ON)
* Here the PLL reference frequency is the value set in PLL, the AM division ratio becomes the same as the PLL reference frequency, but the FM division ratio is twice the PLL frrequency.
* When the diode switch destination is different from this chart, it becomes the K1 destination.

PLL port

m= H: AUTO STEREO
L: MONO

i= H : IF SIGNAL ON
L : IF SIGNAL OFF

5. Initialization(Reset)

Insert the AC plug into the outlet while holding down the ENTER key of main unit.

Initial stage

	State	
SYSTEM	POWER	OFF
CLOCK PROG.	CLOCK	STOP(AM0:00)
	PROG. Operation MODE	OFF
	PROG.1 : ON=AM0:00	OFF=AM0:00
	MOD=PLAY	SOC=TUNER(1ch)
	PROG.2 : ON=AM0:00	OFF=AM0:00
	MOD=PLAY	SOC=TUNER(1ch)
AMP	VOLUME	7SEG=7(μPC1853 VOLdata=10)
	SELECTOR	TUNER
	EQ.	OFF
	PRESENCE	OFF
	LONG PLAY	OFF
	ACTIVE N.B.	OFF
	MUTING	OFF
TUNER	BAND	FM
	Each last BAND	
	FM : P.ch= - - ch	FREQ=min(76.0 or 87.5MHz)
	AM(MW) : P.ch= - - ch	FREQ=min(530 or 531kHz)
	LW : P.ch= - - ch	FREQ=min(153kHz)
	P.CH Memory 1ch~20ch : Test frequency	(Refer to Test Frequency)
	Tuning MODE	AUTO (AUTO STEREO)
TAPE	A/B Selector	B
	A Deck Head position	For FWD
	B Deck Head position	For FWD
	DOLBY NR	OFF
	DIRECTION	ENDLESS
CD	DISC Selector	DISC 1
	REPEAT	OFF

6. Test Frequency(Maker's Memory Frequency)

Destination / PRESET	K WIDE BAND	K NARROW BAND	E With LW	E Without LW
1	FM 98.0MHz	FM 98.0MHz	FM 98.0MHz	FM 98.0MHz
2	FM108.0MHz	FM108.0MHz	FM108.0MHz	FM108.0MHz
3	AM 630kHz	AM 630kHz	AM 630kHz	AM 630kHz
4	AM 990kHz	AM 990kHz	AM 990kHz	AM 990kHz
5	AM 1440kHz	AM 1440kHz	AM 1440kHz	AM 1440kHz
6	AM 1610kHz	AM 1610kHz	AM 1602kHz	AM 1602kHz
7	AM 1700kHz	FM 87.5MHz	LW 162kHz	FM 87.5MHz
8	FM 87.5MHz	FM 87.5MHz	LW 216kHz	FM 87.5MHz
9	FM 87.5MHz	FM 87.5MHz	LW 270kHz	FM 87.5MHz
10	FM 89.1MHz	FM 89.1MHz	FM 89.1MHz	FM 89.1MHz
11	FM 87.5MHz	FM 87.5MHz	LW 279kHz	FM 87.5MHz
12	FM 90.0MHz	FM 90.0MHz	FM 90.0MHz	FM 90.0MHz
13	FM106.0MHz	FM106.0MHz	FM106.0MHz	FM106.0MHz
14	AM 530kHz	AM 530kHz	MW 531kHz	AM 531kHz
15	FM 87.5MHz	FM 87.5MHz	LW 153kHz	FM 87.5MHz
16	FM 97.5MHz	FM 97.5MHz	FM 97.5MHz	FM 97.5MHz
17	FM 98.5MHz	FM 98.5MHz	FM 98.5MHz	FM 98.5MHz
18	FM 87.5MHz	FM 87.5MHz	FM 87.5MHz	FM 87.5MHz
19	FM 87.5MHz	FM 87.5MHz	FM 87.5MHz	FM 87.5MHz
20	FM 87.5MHz	FM 87.5MHz	FM 87.5MHz	FM 87.5MHz

CD MECHANISM DESCRIPTION

CD mechanism operation description

1) How to detach the tray

1. From the rear side of the CD mechanism, use a screw driver or the like to turn the friction arm (❶) fully counterclockwise.
2. Remove the two bracket attachment screws (❷).
3. Remove the tray in the arrow direction (❹).

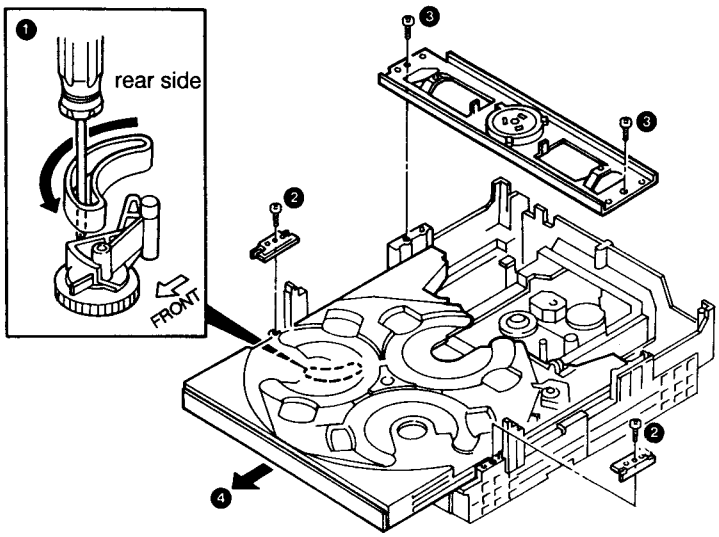

FIG. 1

2) How to attach the tray

1. Check to make sure the rollers on each side (two rollers) have not come off. Move the friction gear by hand in the direction of arrow (❶), align the groove on the rear side of the slide tray with the friction gear shaft and insert the slide tray.
2. Align the grooves on both sides of the slide tray with the main chassis' guides(❷) and insert the slide tray as far back as it will go.
3. Attach the brackets on both sides(two brackets).

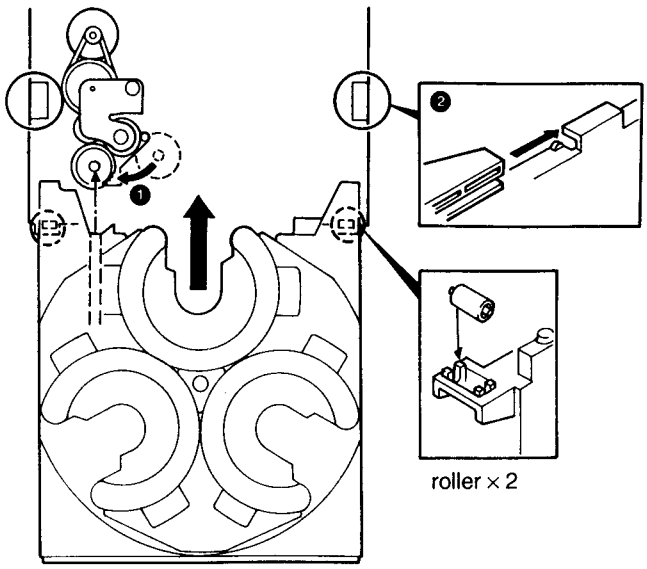

FIG. 2

CD MECHANISM DESCRIPTION

3) Opening the tray during playback

If press the OPEN/CLOSE key during playback, traverse keeping up condition, the loading motor rotates in the direction of the arrow (Fig. 4 ❶).

While rotating counterclockwise, the friction gear moves in the direction of the arrow (Fig.3 ❶), and the slide tray begins to move in the arrow direction.

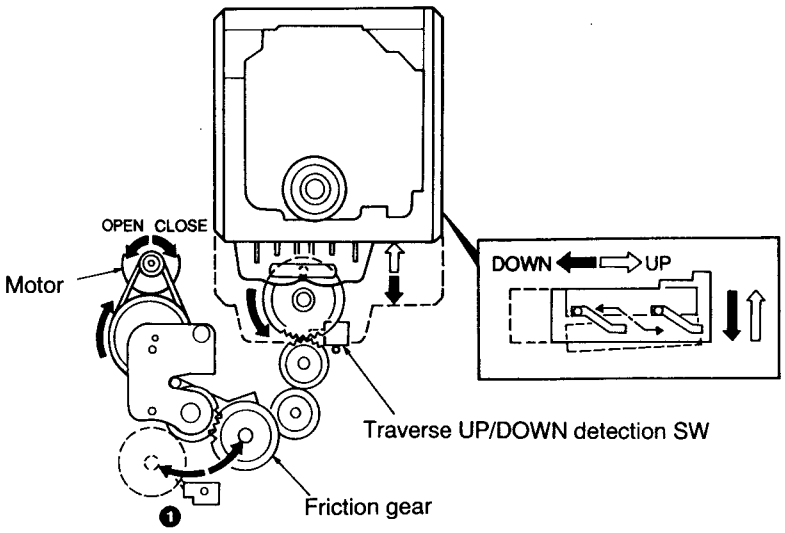

FIG. 3

When the tray is almost finished opening, the lever switch (Fig. 4 ❸) is pressed by the projection on the rear side of the slide tray and opening comes to a stop.

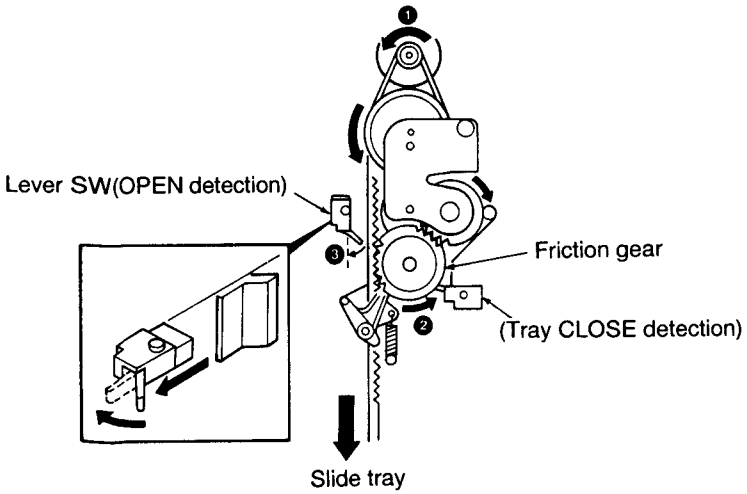

FIG. 4

4) Tray closing

When press the OPEN/CLOSE key, the loading motor rotates in the arrow direction (❶).

The friction gear rotates in the direction of arrow (❷), (❸) the friction gear moves along the groove on the rear side of the tray in the direction of arrow (❹). When the tray is almost finished closing, the CLOSE detect switch comes off and closing to a stop.

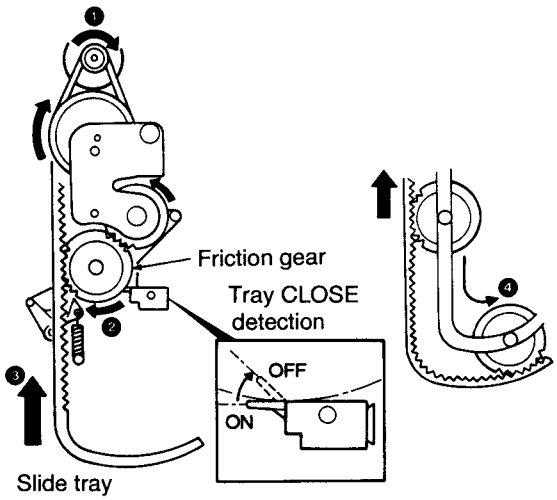

FIG. 5

CD MECHANISM DESCRIPTION

5) Replacing the pickup

1. Remove the two clamp bracket attachment screws.(Fig.1 ❸).
2. Remove the four screws affixing the lift slider and lift out the lift slider and traverse unit.

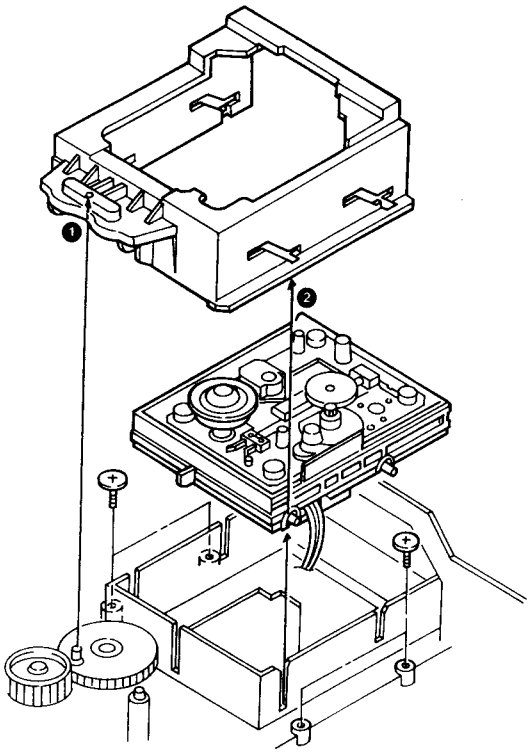

FIG. 6

3. Remove the two 8P connectors.
4. Remove the gear.
5. Remove the shaft.

※When reassembling, always be sure to align the cam gear and traverse shaft as shown in ❶ and ❷ of Fig.6.

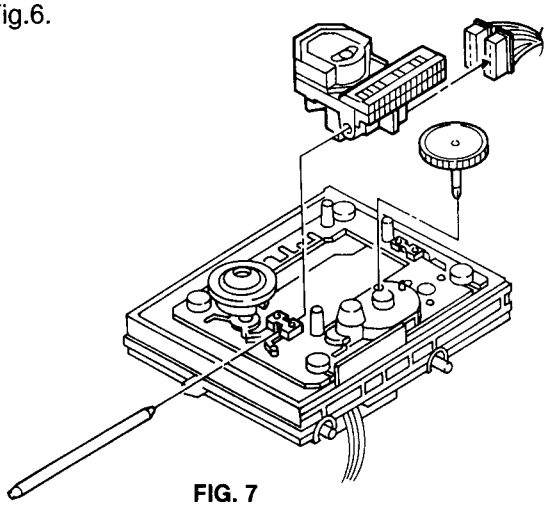

FIG. 7

6) Disc detect

When the rotary tray monitor rotates, the rotary tray begins to rotate clockwise. The disc number detect switch on the rear side of the rotary tray detects the disc number.

The stop position is detected by the stop position detection switch.

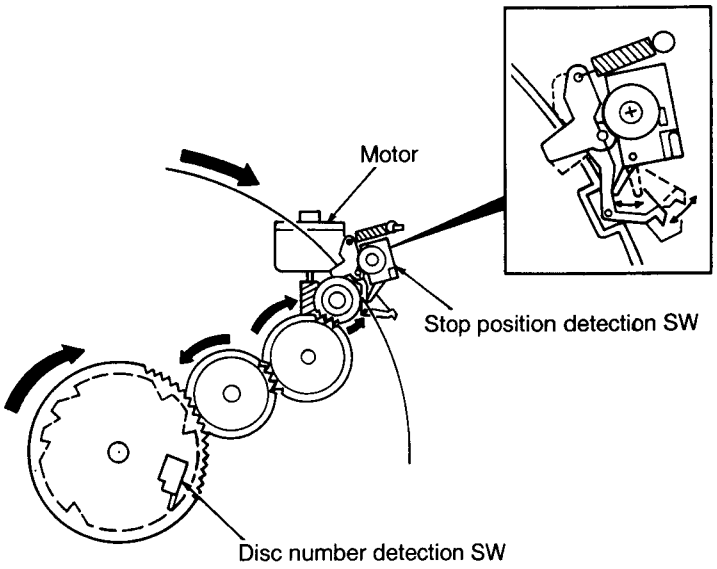

FIG. 8

CASSETTE MECHANISM DESCRIPTION

Cassette deck mechanism description

1) STOP → FWD PLAY/REC
(head faces FWD while stopped)

1. At key on the main monitor (MM) rotates.
2. After 300 ms, when SOL is pulled for 40 ms, boss A of the the tip of the trigger arm comes apart from the cam gear's stopper A. [Fig. 1, 2]

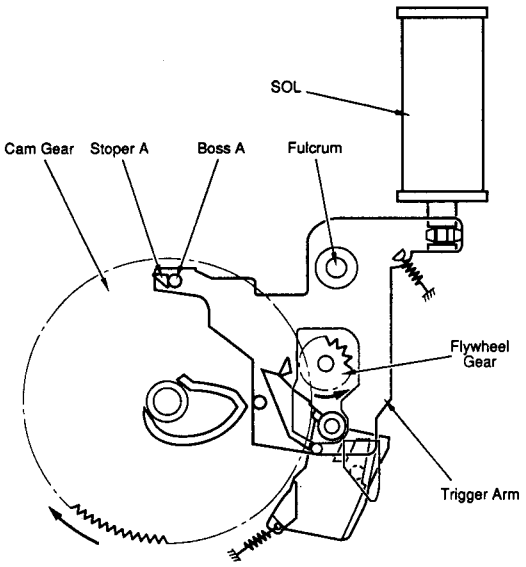

FIG. 1

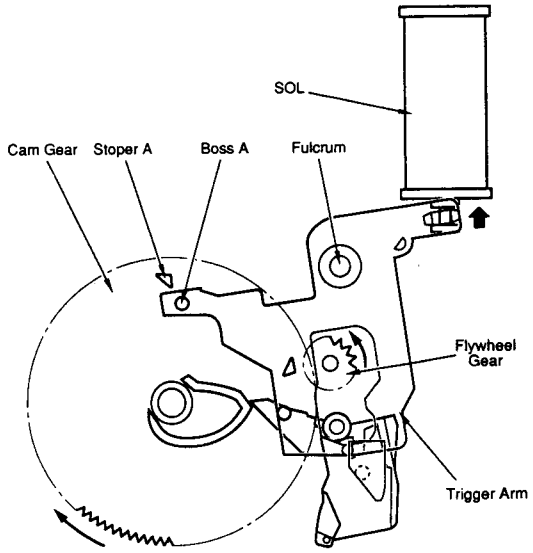

FIG. 2

3. The shift lever is pushed down by spring 1 and the head chassis is pressured by the shift lever and spring 2.Because the shift lever pushes cam B of the cam gear, the actuation of 2. makes the cam gear rotate. [Fig. 3]

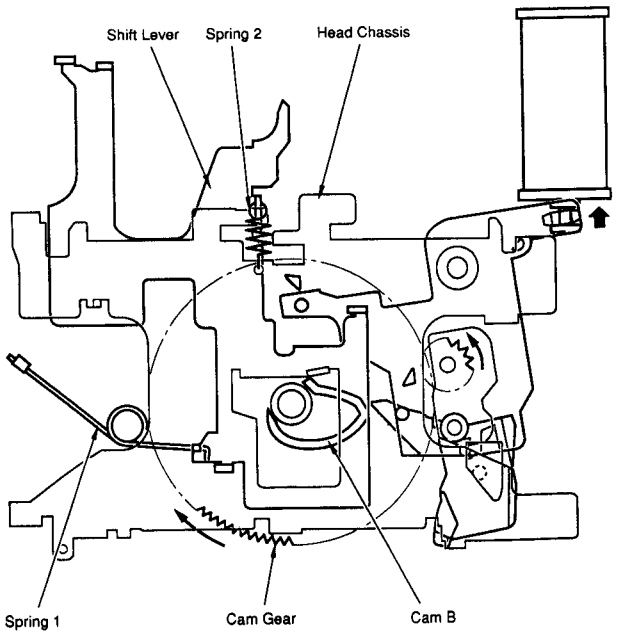

FIG. 3

CASSETTE MECHANISM DESCRIPTION

4. The flywheel gear rotated by the main monitor begins to engage the cam gear, and the cam gear further rotates, raising the shift lever and the head chassis. [Fig. 4, 5]

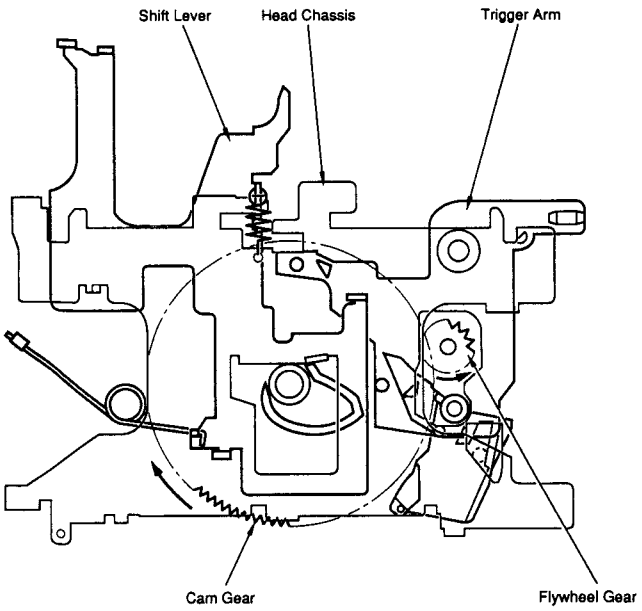

FIG. 4

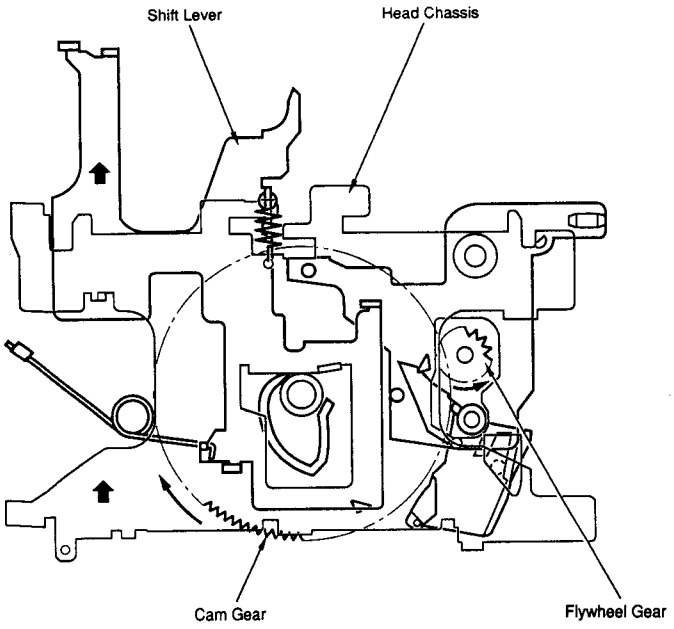

FIG. 5

5. 345 ms after completing the pulling of SOL in 2., the SOL is ON for 150 ms, the trigger arm pushes the select lever right by means of boss B. This splits the select lever toward the right side of boss C above the main chassis and it rises along with the head chassis. [Fig. 6, 7, 8]

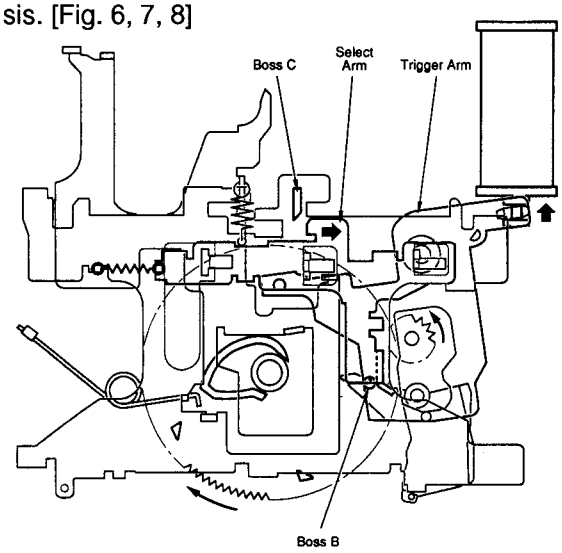

FIG. 6

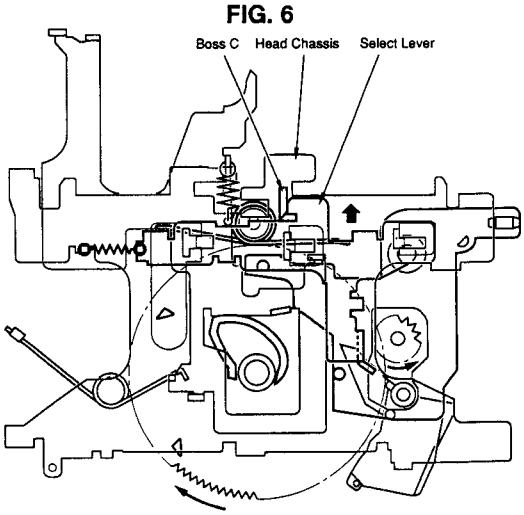

FIG. 7

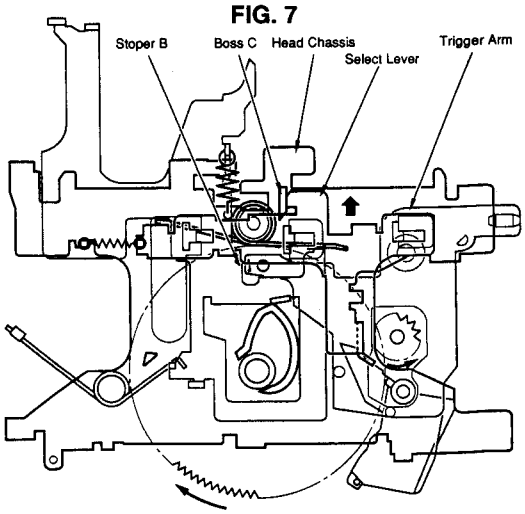

FIG. 8

CASSETTE MECHANISM DESCRIPTION

6. While stopped the clutch arm is centered by its boss C in shift lever groove A , but this begins to be canceled by the shift lever rising action of 4. At the same time, spring 3, which was applied to the clutch arm by the select lever in 5., is pushed up, the clutch arm swings its head to the right and gear A on the clutch arm engages the right reel gear.
7. With the actuation of 6., the cam gear's cam C is pressed by the lower end of the clutch arm, and the two-level idler gear driven by the motor engages the play gear attached to the clutch arm, introducing the clutch from the play gear and driving gear A.
8. The cam gear turns farther and the clutch arm separates from cam C, but the clutch arm's pin A contacts the head chassis, which has become upraised, and the clutch arm remains in the rear. The idler gear and the play gear continue to engage.
9. The upper end of the shift lever, which has become upraised, locks the clutch arm toward the right side. The rising of the head chassis, which was suspended by spring 2 at the shift lever, stops upon touching the RF pin, and the head return plate attached to the head chassis causes the FWD pinch roller to be pressed against the capstan.
10. After the shift lever passes over the cam gear's topmost vertice, the flywheel gear and the cam gear become disengaged. Pressed by the shift lever, the cam gear, which had been following against spring 1 and 2, rotates until the cam gear's stopper B touches the boss on the tip of the trigger arm. ⇨ FWD PLAY mode

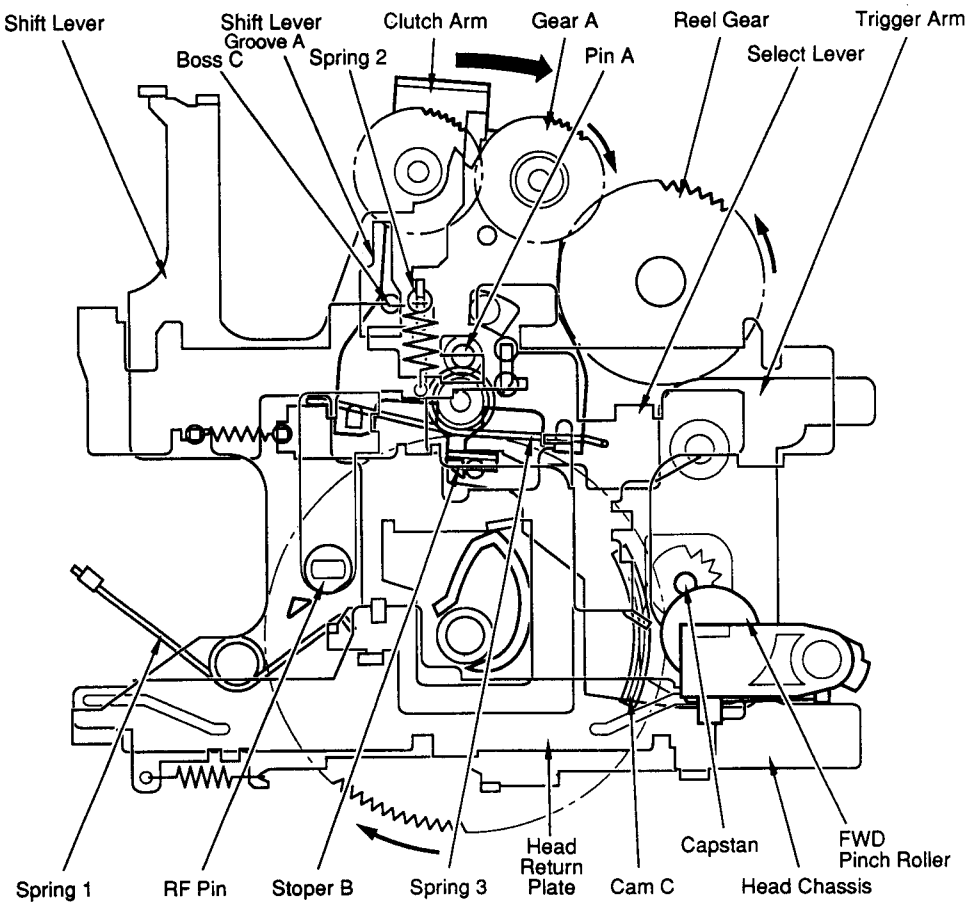

FIG. 9

CASSETTE MECHANISM DESCRIPTION

2) STOP → RVS PLAY/REC

1. At key on the main monitor rotates.
2. After 300 ms, SOL is turned ON for 205 ms. Boss A of the the tip of the trigger arm comes apart from the cam gear's stopper A. [Fig. 10]

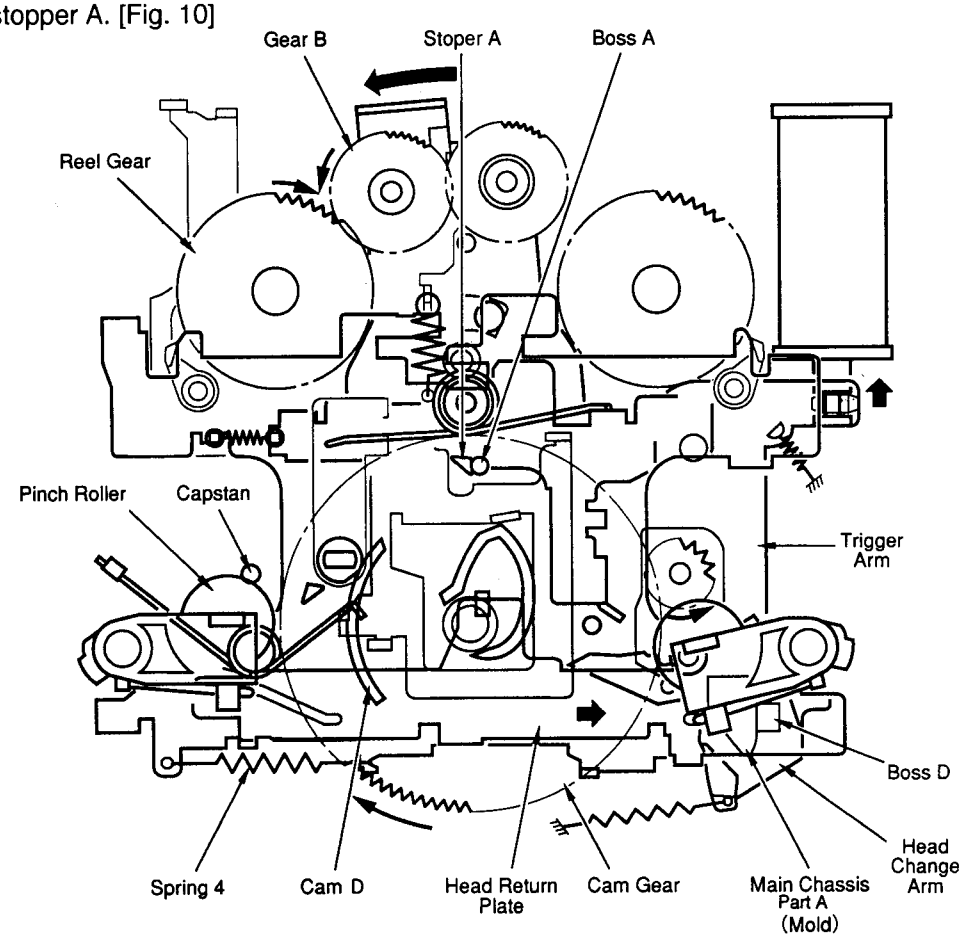

FIG. 10

3. The shift lever is pushed down by spring 1 and the head chassis is pressured by the shift lever and spring 2.Because the shift lever pushes cam B of the cam gear, the actuation of 2. makes the cam gear rotate. [Fig. 3]
4. The flywheel gear rotated by the main monitor begins to engage the cam gear, and the cam gear further rotates, raising the shift lever and the head chassis. [Fig. 4, 5]
5. The head change arm is pulled by the trigger arm, catching on the cam gear's cam D. The cam gear's rotation causes the head chassis arm to rotate, the bottom part of which slides the head return plate toward the right. In order to pressure the RVS pinch roller.
6. The cam gear rotates and the head chassis arm comes apart from cam D and returns. However, because the head chassis is already upraised, boss D of the head return plate is held toward the right side by part A of the main chassis.
7. The SOL is already OFF and the select lever is on the left side. By the same actuation as in 6. of 1). above, the clutch arm head swings to the left and gear (B) atop the clutch arm engages the left reel gear.
8. With the actuation of 6.of 1) , the cam gear's cam C is pressed by the lower end of the clutch arm, and the two-level idler gear driven by the motor engages the play gear attached to the clutch arm, introducing the clutch from the play gear and driving gear A.

CASSETTE MECHANISM DESCRIPTION

The cam gear turns farther and the clutch arm separates from cam C, but the clutch arm's pin A contacts the head chassis, which has become upraised, and the clutch arm remains in the rear. The idler gear and the play gear continue to engage.

9. The HD chassis stops by the RF pin. The RVS pinch roller is pressed against the capstan by the head return plate, which is slid to the right.
10. After the shift lever passes over the cam gear's topmost vertice, the flywheel gear and the cam gear become disengaged. Pressed by the shift lever, the cam gear, which had been following against spring 1 and 2, rotates until the cam gear's stopper B touches the boss on the tip of the trigger arm. ⇨ RVS PLAY mode

3) STOP → FF/CUE[Fig.11]

1. At key on the main monitor rotates.
2. After 300 ms, when SOL is pulled for 40 ms, boss A of the the tip of the trigger arm comes apart from the cam gear's stopper A. [Fig. 1, 2]
   The shift lever is pushed down by spring 1 and the head chassis is pressured by the shift lever and spring 2. Because the shift lever pushes cam B of the cam gear, the actuation of 2. makes the cam gear rotate. [Fig. 3]
   The flywheel gear rotated by the main monitor begins to engage the cam gear, and the cam gear further rotates, raising the shift lever and the head chassis. [Fig. 4, 5]
3. After the SOL turns OFF, 205 ms later the SOL is turned ON again for 310 ms. The trigger arm slides the select arm to the right. Accordingly, the select lever is split toward the right side of main chassis boss C and rises along with the head chassis.
4. The CR lever attached to the main chassis by the select lever in 3. slides to the right. The head chassis' section B, which has risen there, shifts the CR lever to the right. The rising of the head chassis contacts the CR lever and stops. → FF/CUE head height

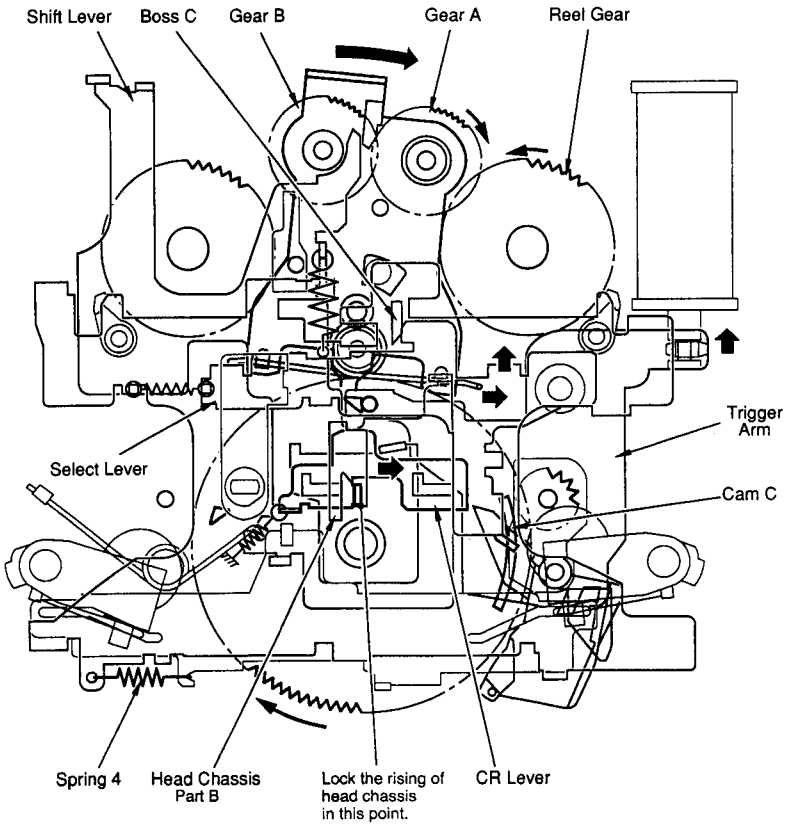

FIG. 11

CASSETTE MECHANISM DESCRIPTION

5. While stopped the clutch arm is centered by its boss C in shift lever groove A, but this begins to be canceled by the shift lever rising action of 4.of 1). At the same time, spring 3, which was applied to the clutch arm by the select lever in 5.of 1), is pushed up, the clutch arm swings its head to the right and gear A on the clutch arm engages the right reel gear.
   With the actuation of above, the cam gear's cam C is pressed by the lower end of the clutch arm, and the two-level idler gear driven by the motor engages the play gear attached to the clutch arm, introducing the clutch from the play gear and driving gear A.
6. The cam gear turns even further and the clutch arm separates from cam C. The head chassis is stopped at position 4. so the clutch arm comes forward again. The idler gear and play gear are disengaged, and the FF/REW gear and idler gear engage. The clutch is introduced from the FF/REW gear and gears A and B and the reel gear are driven.
7. The clutch arm is locked to the right by the upper end of the risen shift lever. The head chassis is in the position of 4., so the pinch roller and capstan are not pressed together.
8. After the shift lever passes over the cam gear's topmost vertice, the flywheel gear and the cam gear become disengaged. Pressed by the shift lever, the cam gear, which had been following against spring 1 and 2, rotates until the cam gear's stopper B touches the boss on the tip of the trigger arm. ⇨ FF/CUE mode

4) STOP → REW/REV [Fig. 12]

1. At key on CPM rotates.
2. After 300 ms, when SOL is pulled for 40 ms, boss A of the the tip of the trigger arm comes apart from the cam gear's stopper A. [Fig. 1, 2]
   The shift lever is pushed down by spring 1 and the head chassis is pressured by the shift lever and spring 2.Because the shift lever pushes cam B of the cam gear, the actuation of above. makes the cam gear rotate. [Fig. 3]
   The flywheel gear rotated by the main monitor begins to engage the cam gear, and the cam gear further rotates, raising the shift lever and the head chassis. [Fig. 4, 5]
3. After the SOL turns OFF, 205 ms later the SOL is turned ON again for 135 ms. The select lever and CR lever shift to the right and section B of the head chassis, which has risen, shifts the CR lever to the right. The rising of the head chassis stops on contacting the CR lever.→REW/REV head height position.
   Furthermore, because the SOL ON time is shorter than FF/CUE , and the select lever comes to the position of boss C after returning to the left side, the select lever is split to the left.

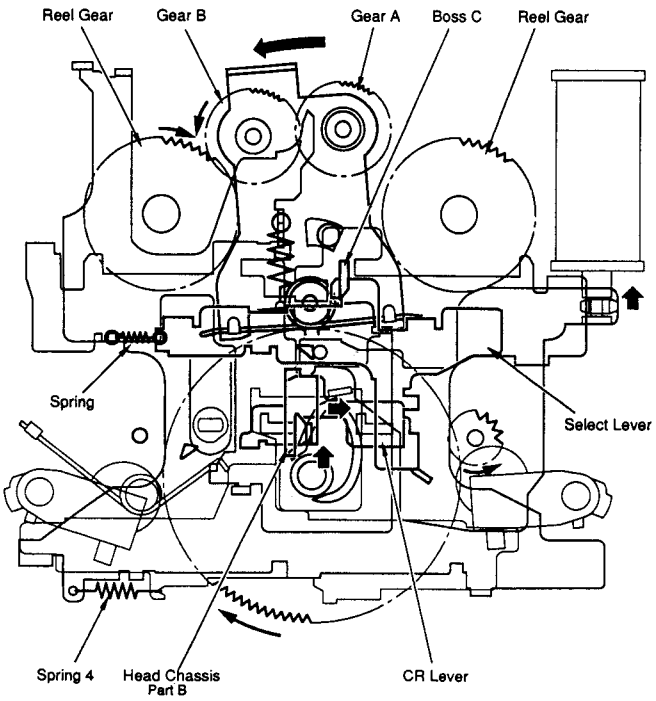

FIG. 12

CASSETTE MECHANISM DESCRIPTION

4. The SOL is already OFF and the select lever is on the left side. By the same actuation as in 6. of 1) above, the clutch arm head swings to the left and gear B atop the clutch arm engages the left reel gear.
5. With the actuation in 6.of 1), the cam gear's cam C is pressed by the lower end of the clutch arm, and the two-level idler gear driven by the motor engages the play gear attached to the clutch arm, introducing the clutch from the play gear and driving gear A.
6. The cam gear turns even further and the clutch arm separates from cam C. The head chassis is stopped at position 4. of 3) so the clutch arm comes forward again. The idler gear and play gear are disengaged, and the FF/REW gear and idler gear engage. The clutch is introduced from the FF/REW gear and gears A and B and the reel gear are driven.
7. After the shift lever passes over the cam gear's topmost vertice, the flywheel gear and the cam gear become disengaged. Pressed by the shift lever, the cam gear, which had been following against spring 1 and 2, rotates until the cam gear's stopper B touches the boss on the tip of the trigger arm.⇨ REW/REV mode

5) FWD/REV PLAY, FF•CUE/REW•REV → STOP [Fig. 13]

1. 20 ms after key on, SOL turns ON.
2. The boss at the tip of the trigger arm comes apart from stopper B. The cam gear rotates from the force of the shift lever pressing downward.
3. The cam gear begins to engage the flywheel gear, which is rotating due to the CPM. The cam gear turns further, and the shift lever and head chassis lower. (When initiating from RVS Play, the head return plate comes apart from A of the main chassis and is returned to the left side by spring 4. The head swings around to the FWD direction due to the force of spring 5.
4. The flywheel gear and cam gear disengage, but the force of the shift lever makes rotation continue until the boss at the tip of the trigger arm comes into contact with the cam gear's stopper A. ⇨ STOP mode (switching of the various modes always goes through STOP)

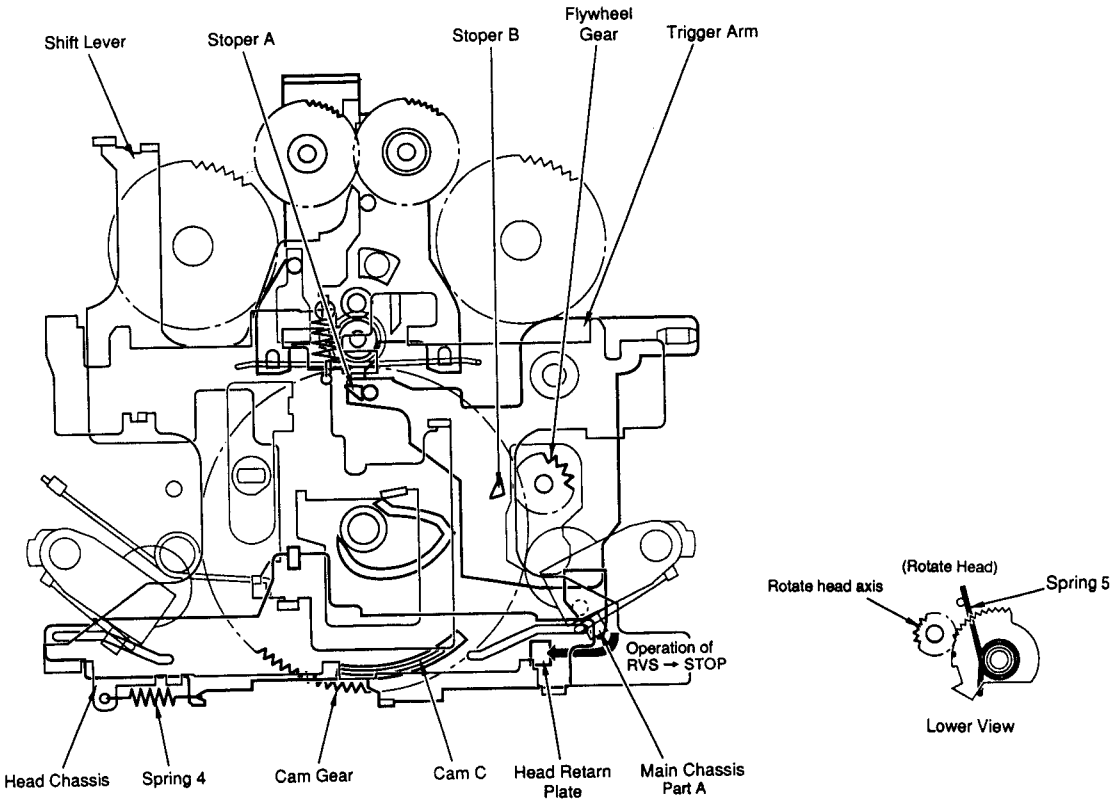

FIG. 13

ADJUSTMENT

CD section

No.	ITEM	INPUT SETTING	OUTPUT SETTING	PLAYER SETTING	ALIGNMENT POINTS	ALIGN FOR	FIG.
Remove the clamper ass'y before step 1. And remount it after step 1.							
1	LASER POWER	—	Set the sensor section of the optical power meter on the pickup lens.	With pressing the P.MODE key, turn the power on to enter the test mode. Press the "CHECK" key to checkthat the display is"03".	—	On the power from 0.08 to 0.15mW, when the diffraction grating is correctly aligned with the RF level of 1.0Vp-p or more.	(a)
Cancel test mode and open the tray to load the disc.							
2	FOCUS ERROR	Test disc Type 4	Connect an oscilloscope as follows. CN207 Connect hot side to RF(No.①) Connect Ground to VREF(No.②)	Press the PLAY key.	FE BALANCE VR201	Adjust the waveform to better point.	(b)

(Note) Type 4 disc : SONY YDS-18 Test Disc or equivalent.

(a) Laser power

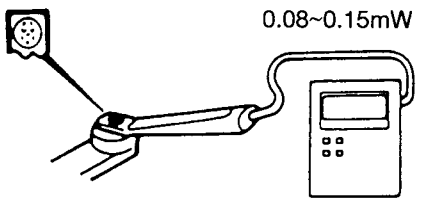

Pickup Optical power meter

(b)

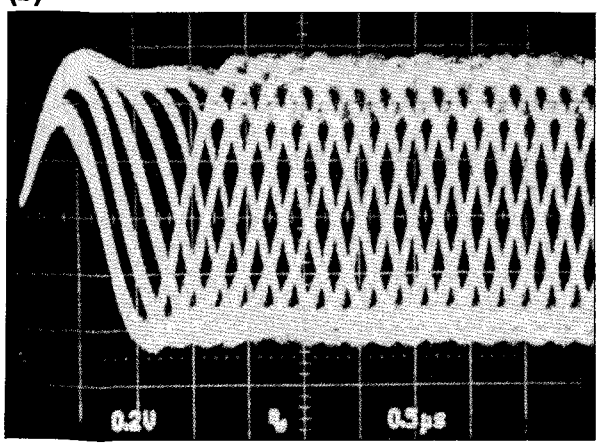

- RF signal in test mode(PLAY).
- Perform the tangential and focusing offset adjustment so that each of the center cross points are focused into one point on the display.
  The crossing points above and below the center shall also be displayed clearly.

AJUSTE

CD sección

No	ITEM	AJUSTES DE ENTRADA	AJUSTES DE SALIDA	AJUSTES DEL SINTONIZADOR	PUNTOS DE CALIBRACIÓN	CALIBRA R EN	FIG.
Quite la brazadera antes del paso 1 y vuelva a montarla después del 1.							
1	POTENCIA DEL LÁSER	—	Coloque la sección del sensor del medidor de potencia óptica en la lente del captor.	Active la alimentación eléctrica al tiempo que oprime la tecla P.MODE para acceder a la modalidad de prueba. Oprima la tecla "CHECK" para comprobar que la indicación es "03".	—	A una potencia de 0,08 a 0,15mV, la rejilla de difracción debe ester correctamente alineada, con un nivel de RF de 1,0Vp-p o más.	(a)
Cancelar la modalidad de prueba y abrir la bandeja para cargar el disco.							
2	ERROR DE ENFOQUE	Probar el disco tipo 4.	Conectar un osciloscopio como sigue.CN207 Conectar RD(No①) al lado con corriente Conectar VREF(No④) a masa.	Oprimir la tecla PLAY.	EQILIBRIO FE VR201	Ajustar al punto donde la forma de onda es óptima.	(b)

(Nota) : Disco tipo 4 : Disco de prueba SONY YDS-18 o equivalente.

(a) Potencia del láser

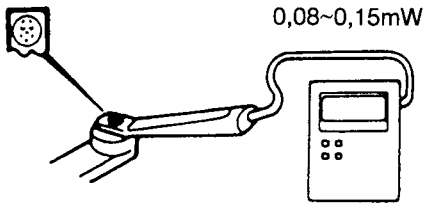

Captor Medidor de potencia del láser

(b)

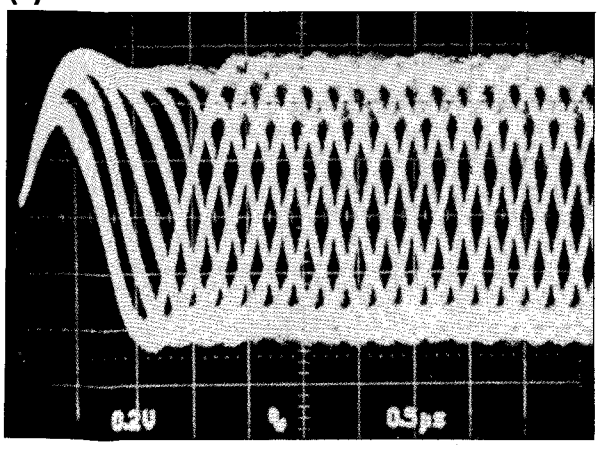

- Sefial RD en modo de prueba(reproducción).
- Realizar los ajustes de desviación tangencial y de enfoque de manera que cada una de las crucetas centrals se enfoquen en punto de la pantalla.
  Las crucetas que están encima debajo del centro deben también indicarse con claridad.

ADJUSTMENT

Cassette Deck section

No.	ITEM	INPUT SETTING	OUTPUT SETTING	DECK SETTING	ALIGNMENT POINTS	ALIGN FOR	FIG.
Unless otherwise specifilied, set the respective switches as follows: **TAPE : NORMAL DOLBY : OFF INPUT : AUX(AUX LEVEL : MAX)** **I. Cassette mechanism section(Recording/ play head adjustment)**							
1	Degaussing and cleanling	—	—	Power : off, Degaussing, cleaning, PLAY	Recording heads, Erase heads, Capstans, Pinch rollers	Degauss the recording/play heads by a heads eraser. Clean the recording/play heads, erase heads capstans and pinch rollers by a cotton swab soaked with alcohol.	
2	Recording/play head azimuth	SCC-1727, TCC-153, MTT-144, 10kHz, -10dBs	(B)	PLAY	Azimuth adjust-ment screw	Maximize the output and adjust so that the Lissajous figure nears a line slanted 45°	
II. Printed circuit board adjustment Note : First perform the double-speed sdjustment.							
1	Tape speed (double)	SCC-1727, TCC-110, MTT-144, 3kHz,	(B)	After normal play, always short the base side of Q7 to GND to set to high speed.	A DECK : VR7 B DECK : VR1	Adjust so that the frequency is 6 kHz at the tape center.	
2	Tape speed (normal)	SCC-1727, TCC-110, MTT-111, 3kHz,	(B)		A DECK : VR8 B DECK : VR2	Adjust so that the frequency is 3 kHz at the tape center.	
III. Printed circuit board adjustment(X28-2620-00)							
1	Play back level	MTT-150 400Hz	(B)	PLAY	A DECK : VR9(L) VR10(R) B DECK : VR3(L) VR4(R)	Set pins No.1(L ch) and No.4(R ch) of CN401 to -0.5dBs. Or, set pins No.8(L ch) and No.49(R ch) of IC 401 to 775mV.	
2	Bias current	INPUT : MAX 1kHz , -10dBs 10kHz, -30dBs	(B)	Adjust AUX input so that the reco-rding monitor output of CN401 becomes -20dBs at 1kHz, and record and play 1kHz and 10kHz alternately.	B DECK : VR5(L) VR6(R)	Record 1kHz and 10kHz reciprocally, and adjust so that they are identical in playback level.	
3	Bias oscilating frequency	Load the non recorded tapes on Deck A and B.	Connect the frequency counter between E.H & GND on Deck A, between E.H & GND on Deck B.	REC	B DECK: L3	After confirming BEAT CANCEL OFF, adjust so that the frequency counter shows 105kHz.	

※Equipment connection : Refer to page 34.

AJUSTE

Cassette Deck seccíon

Orden	Ítem	Ajuste de entrada	Ajuste de salida	Ajuste de la platina	Puntos de ajuste	MÈtodo de ajuste	Fig.
A menos que se indique lo contrario, ajustar los interruptores respectivos de la manera siguiente: TAPE: NORMAL DOLBY: OFF INPUT: AUX (NIVEL DE AUX : MAX) I. Sección del mecanismo de la cassette (ajuste de la cabeza de grabación/reproducción)							
1	Desmagneti-zación y limpieza	—	—	Alimentación: apagado, desmagnetización, limpieza, reproducción	Cabezas de grabación, cabezas de borrado, ejes de arrastre, rodillos presores	Desmagnetizar las cabezas de grabación/reproducción con un borrador de cabezas. Limpiar las cabezas de grabación/ reproducción, cabezas de borrado, ejes de arrastre y rodillos presores con un bastoncillo de algodón humedecido en alcohol.	
2	Acimut de la cabeza de grabación/ reproducción	SCC-1727, TCC-153, MTT-144, 10kHz, -10dBs	(B)	REPRODUCCIÓN (PLAY)	Tornillo de ajuste del acimut	Maximizar la salida y ajustar de manera que la forma de Lissajous se aproxime a una lÌnea inclinada 45°	
II. Ajuste de la tarjeta de circuito impreso Nota: Efectuar primero el ajuste de la velocidad doble.							
1	Velocidad de la cinta (doble)	SCC-1727, TCC-110, MTT-144, 3kHz	(B)	DespuÈs de la reproducción normal, cortocircuitar siempre la base de Q7 con masa (GND) para ajustarlo en alta velocidad.	PLATINA A: VR7 PLATINA B: VR1	Ajustar de manera que la frecuencia sea de 6 kHz en el centro de la cinta.	
2	Velocidad de la cinta (normal)	SCC-1727, TCC-110, MTT-111, 3kHz	(B)		PLATINA A: VR8 PLATINA B: VR2	Ajustar de manera que la frecuencia sea de 3 kHz en el centro de la cinta.	
III. Ajuste de la tarjeta de circuito impreso (X28-2620-00)							
1	Nivel de reproducción	MTT-150 400Hz	(B)	REPRODUCCI"N (PLAY)	PLATINA A: VR9 (IZQ.) VR10 (DCH.) PLATINA B: VR3 (IZQ.) VR4 (DCH.)	Ajustar los contactos no1 (canal izq.) y no 4 (canal dch.) de CN401 en -0,5 dBs. O ajustar los contactos no 8 (canal izq.) y no 49 (canal dch.) de IC401 en 775 mV.	
2	Corriente de polarización	ENTRADA : AUX 1kHz , -10dBs 10kHz, -30dBs	(B)	Ajustar el entrada AUX de manerfa que la salida de comprobaciÛn de volumen de CN401 sea de -20 dBs a 1 kHz, y grabar y reproducir 1 kHz y 10 kHz alternadamente.	PLATINA B: VR5 (IZQ.) VR6 (DCH.)	Grabar 1 Mhz y 10 kHz recÌprocamente, y ajustar de manera que sean idÈnticos en el nivel de reproducciÛn.	
3	FRECUENCIA DE OSCILACIÓN DE LA POLARIZACIÓN	Cargar las cintas sin grabar en las platinas A y B.	Conectar el contador de frecuencias entre E.H. y masa de la platina A y entre E.H. y masa de la platina B.	GRABACIÓN (REC)	PLATINA B: L3	Después de confirmar que la cancelación de batido (BEAT CANCEL) est· desactivada, ajustar de manera que el contador de frecuencias indique 105 kHz.	

※Conectar de equivalent : como sigue page 34.

ADJUSTMENT

TUNER section

K.P.M.X.R, I Type (X29-249X)

No.	ITEM	INPUT SETTING	OUTPUT SETTING	TUNER SETTING	ALIGNMENT POINTS	ALIGN FOR	FIG.
FM SECTION		BAND : FM					
1	DISTORTION (STEREO)	(C) 98.0MHz 1kHz,±68.25 kHz dev Pilot : ±7.5kHz dev 60 dBμ(ANT input)	(B)	AUTO 98.0MHz	IFT (W02-)	Minimum distortion.	

E.T.G Type (X29-248X)

No.	ITEM	INPUT SETTING	OUTPUT SETTING	TUNER SETTING	ALIGNMENT POINTS	ALIGN FOR	FIG.
FM SECTION		BAND : FM					
1	DISCRIMINATOR	(A) 98.0MHz 1kHz,±75 kHz dev 60 dBμ(ANT input)	Connect a DC voltmeter between TP3 and TP4. (X05-)	AUTO or MONO 98.0MHz	L3 (X05-)	0V	(c)
2	DISTORTION (STEREO)	(C) 98.0MHz 1kHz,±68.25 kHz dev Pilot : ±7.5kHz dev 60 dBμ(ANT input)	(B)	AUTO 98.0MHz	IFT (W02-)	Minimum distortion.	
3	SEPARATION	(C) 98.0MHz 1kHz,±40 kHz dev Pilot : ±6kHz dev Selector : L or R 60 dBμ(ANT input)	(B)	AUTO 98.0MHz	VR3 (X29-)	Minimum crosstaik.	
4	TUNING LEVEL	(C) 98.0MHz 1kHz,±75 kHz dev 14dBμ(ANT input) 75Ω 18dBμ(ANT input) 300Ω	(B)	AUTO or MONO 98.0MHz	VR1 (X29-)	Adjust VR1 and stop at the point where FL201(TUNED) goes ON.	
AM SECTION		BAND : AM(MW)					
1	TUNING LEVEL	(D) 1008MHz 400Hz, 30% mod 26 dBμ(ANT input)	(B)	1008 kHz	VR2 (X29-)	Adjust VR2 and stop at the point where FL201(TUNED) goes ON.	

※Equipment connection : Refer to page 34.

AJUSTE

TUNER seccíon

Tipo K.P.M.X.R, I (X29-249X)

No	ÍTEM	AJUSTES DE ENTRADA	AJUSTES DE SALIDA	AJUSTES DEL SINTONIZADOR	PUNTOS DE CALIBRACIÓN	CALIBRA R EN	FIG.
SECCIÓN DE FM		**BANDA: FM**					
1	DISTORSIÓN (ESTÉREO)	(C) 98,0 MHz 1 kHz, ±68,25 kHz desv. Piloto: ±7,5 kHz desv. 60 dBμ (entrada ANT)	(B)	AUTO 98,0 Mhz	IFT (W02-)	Distorsión mínima	

Tipo E.T.G(X29-248X)

No	ÍTEM	AJUSTES DE ENTRADA	AJUSTES DE SALIDA	AJUSTES DEL SINTONIZADOR	PUNTOS DE CALIBRACIÓN	CALIBRA R EN	FIG.
FM SECTION		**BAND : FM**					
1	DISCRIMINADOR	(A) 98,0 MHz 1 kHz, ±75 kHz desv. 60 dBμ (entrada ANT)	Conectar un voltìmetro de CC entre TP3 y TP4. (X05-)	AUTO o MONO 98,0 MHz	L3 (X05-)	0V	(c)
2	DISTORSIÓN (ESTÉREO)	(C) 98,0 MHz 1 kHz, ±68,25 kHz desv. Piloto: ±7,5 kHz desv. 60 dBm (entrada ANT)	(B)	AUTO 98,0 MHz	IFT (W02-)	Distorsión mínima	
3	SEPARACIÓN	(C) 98,0 MHz 1 kHz, ±40 kHz desv. Piloto: ±6 kHz desv. Selector: L o R 60 dBm (entrada ANT)	(B)	AUTO 98,0 MHz	VR3 (X29-)	Diafonía mníima	
4	NIVEL DE SINTÓNA	(A) 98,0 MHz 1 kHz, ±75 kHz desv. 14 dBμ(entrada ANT) 75 Ω 14 dBm(entrada ANT) 300 Ω	(B)	AUTO o MONO 98,0 MHz	VR1 (X29-)	Ajustar VR1 y parar en el punto donde se activa FL201 (TUNED)	
SECCIÓN DE AM		**BANDA: AM (OM)**					
1	NIVEL DE SINTÓNA	(D) 1008 kHz 400 Hz, 30% mod. 26 dBμ (entrada ANT)	(B)	1008 kHz	VR2 (X29-)	Ajustar VR2 y parar en el punto donde se activa FL201 (TUNED)	

※Conectar de equivalent : como sigue page 34.

ADJUSTMENT

(c)

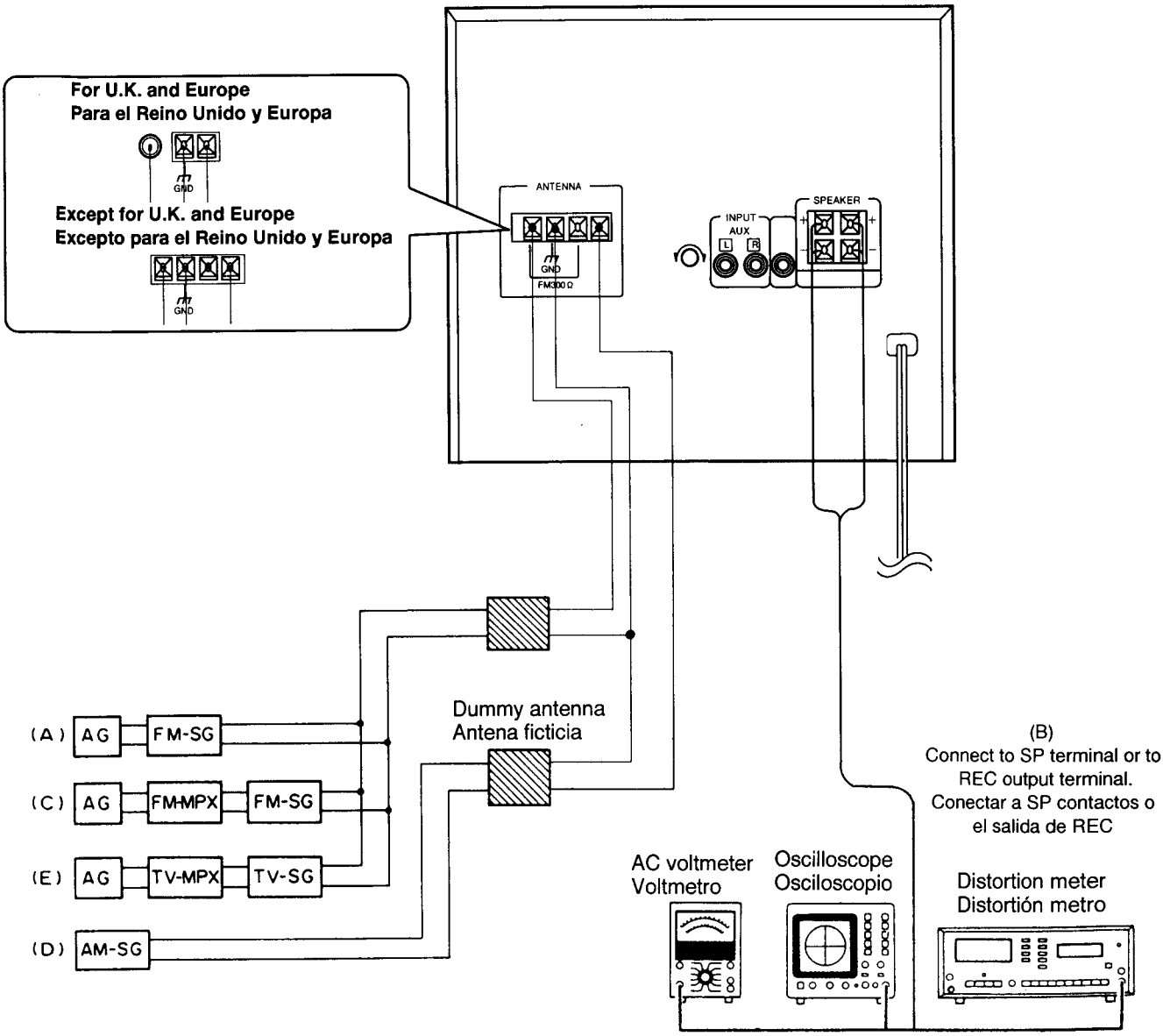

REC output : for X29 L ch, connect CN401 pin 1 to GND;
for X29 R ch, connect CN401 pin 4 toGND.

Salida de REC : X29 canal izp., Conectar CN401
contactos no 1 a masa.
X29 canal dch., Conectar CN401
contactos no 4 a masa.

RXD-C3/C3L RXD-C3/C3L

WIRING DIAGRAM

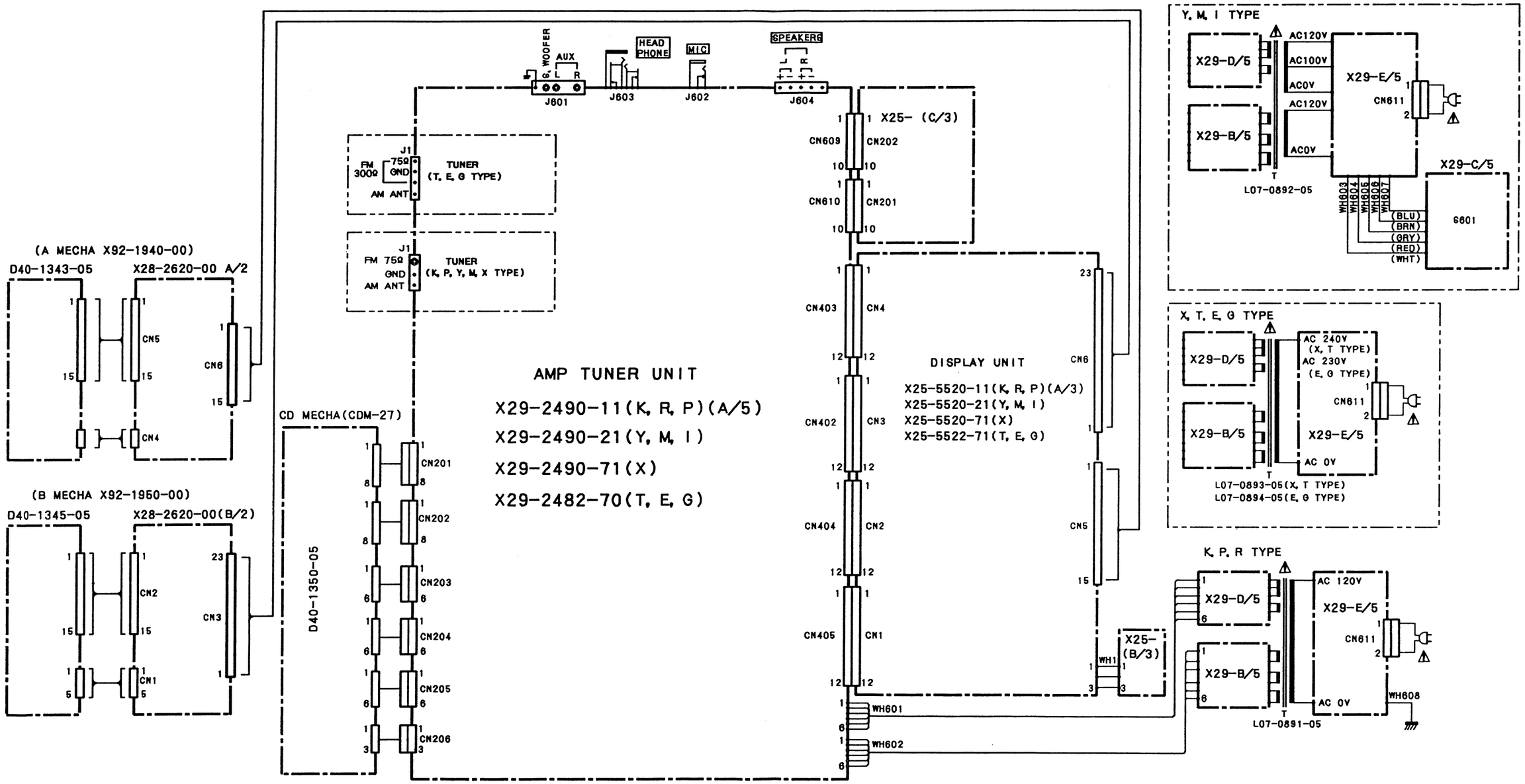

PC BOARD(Component Side View)

DISPLAY UNIT (X25-5520-11) : K, P, R TYPE
(X25-5520-21) : Y, M, I TYPE
(X25-5520-71) : X, TYPE
(X25-5522-71) : E, T, G TYPE

RECORD/PLAYBACK UNIT(X28-2620-00)

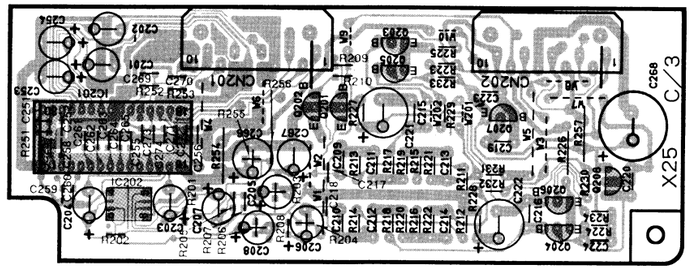

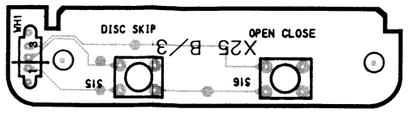

DISK SKIP OPEN/CLOSE

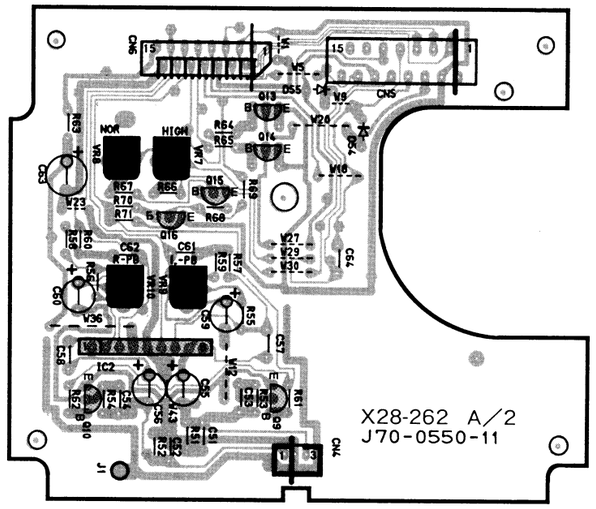

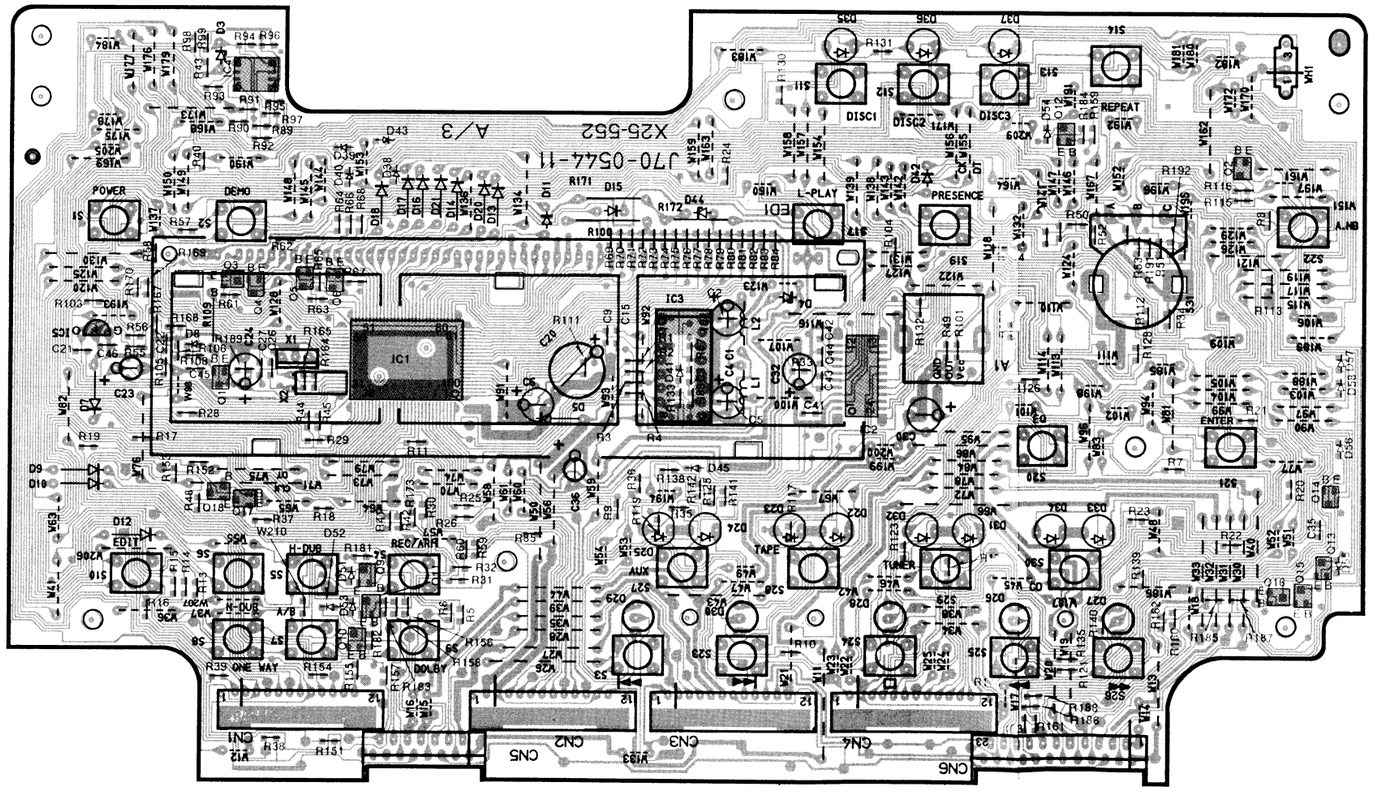

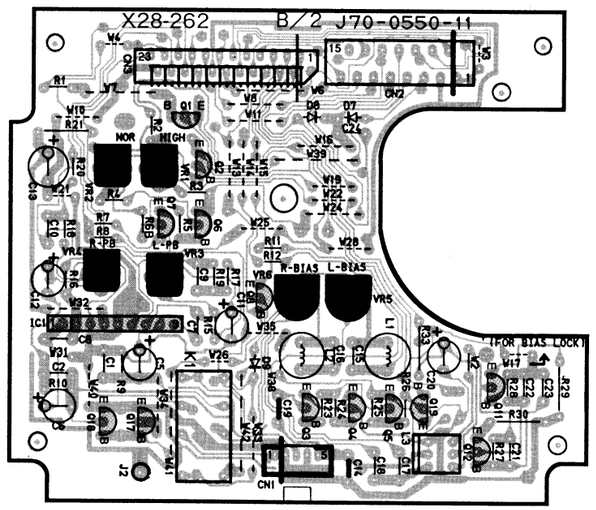

Refer to the schematic diagram for the values of resistors and capacitors.

PC BOARD(Component Side View)

MAIN UNIT-TUNER(X29-2482-70) : E, T, G TYPE

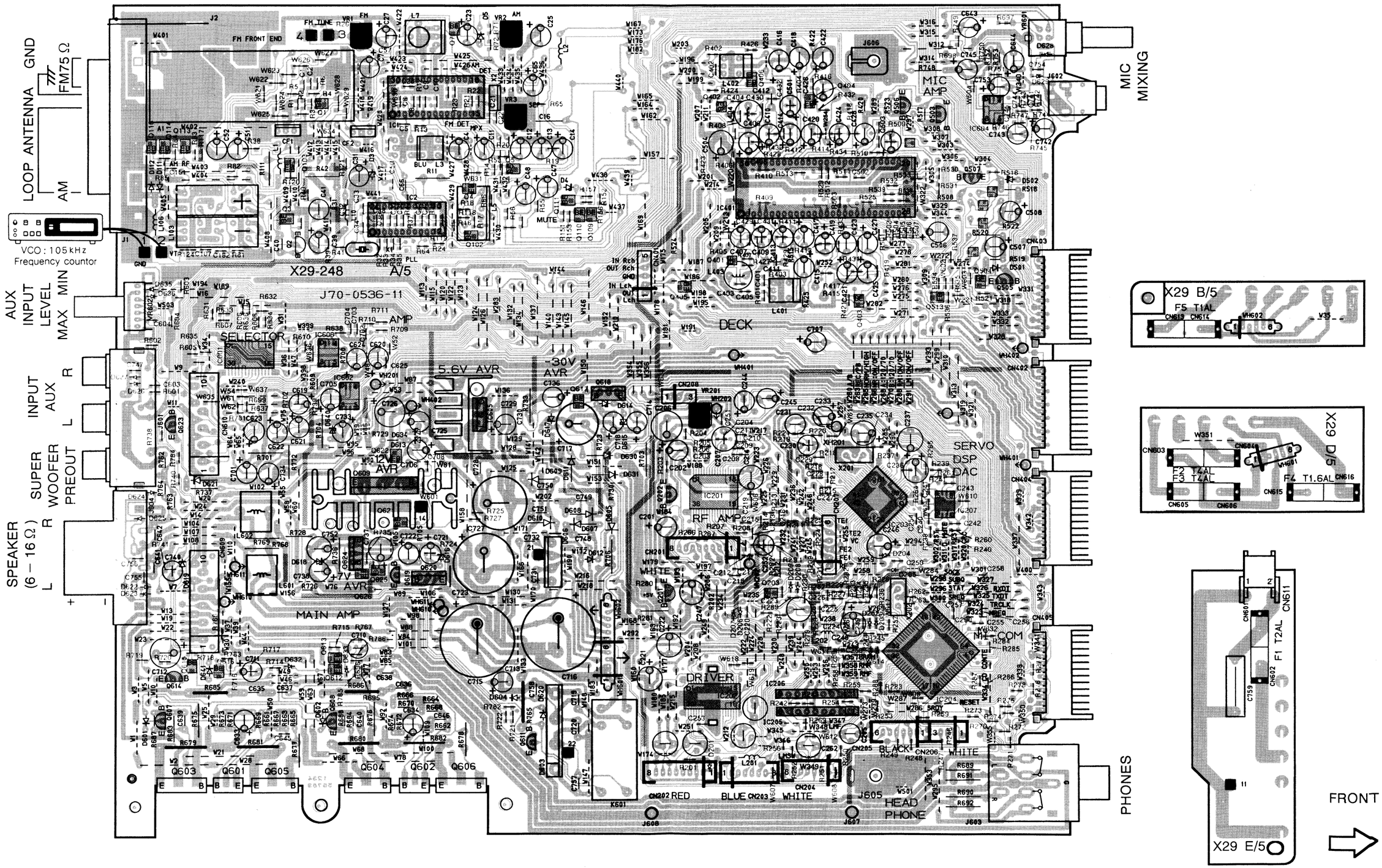

Refer to the schematic diagram for the values of resistors and capacitors.

PC BOARD(Component Side View)

MAIN UNIT-TUNER (X29-2490-11) : K, P, R, TYPE
(X29-2490-21) : Y, M, I TYPE
(X29-2490-71) : X TYPE

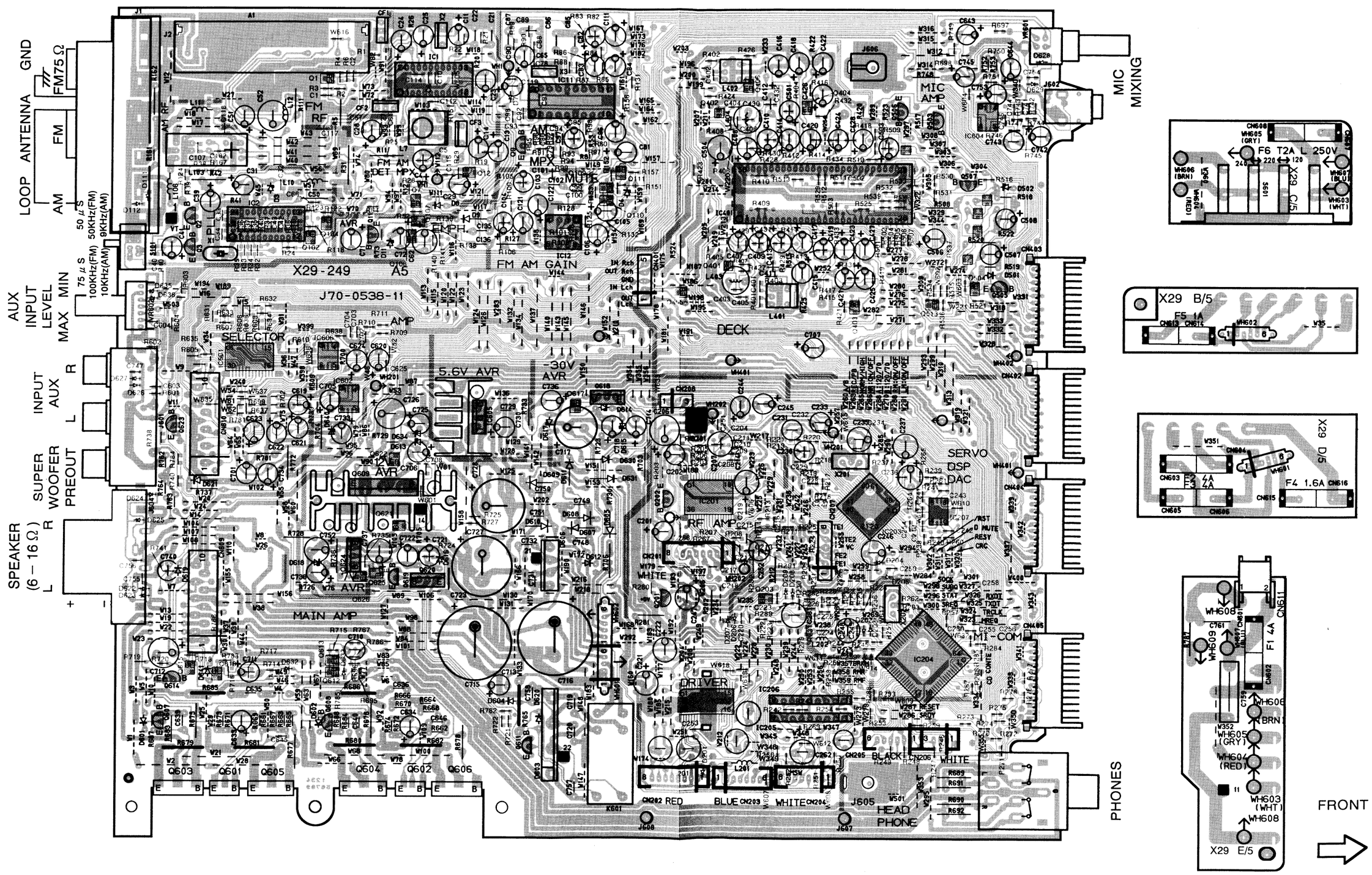

Refer to the schematic diagram for the values of resistors and capacitors.

X29-2490-XX (K, R, P, Y, M, I, X TYPE) TUNER

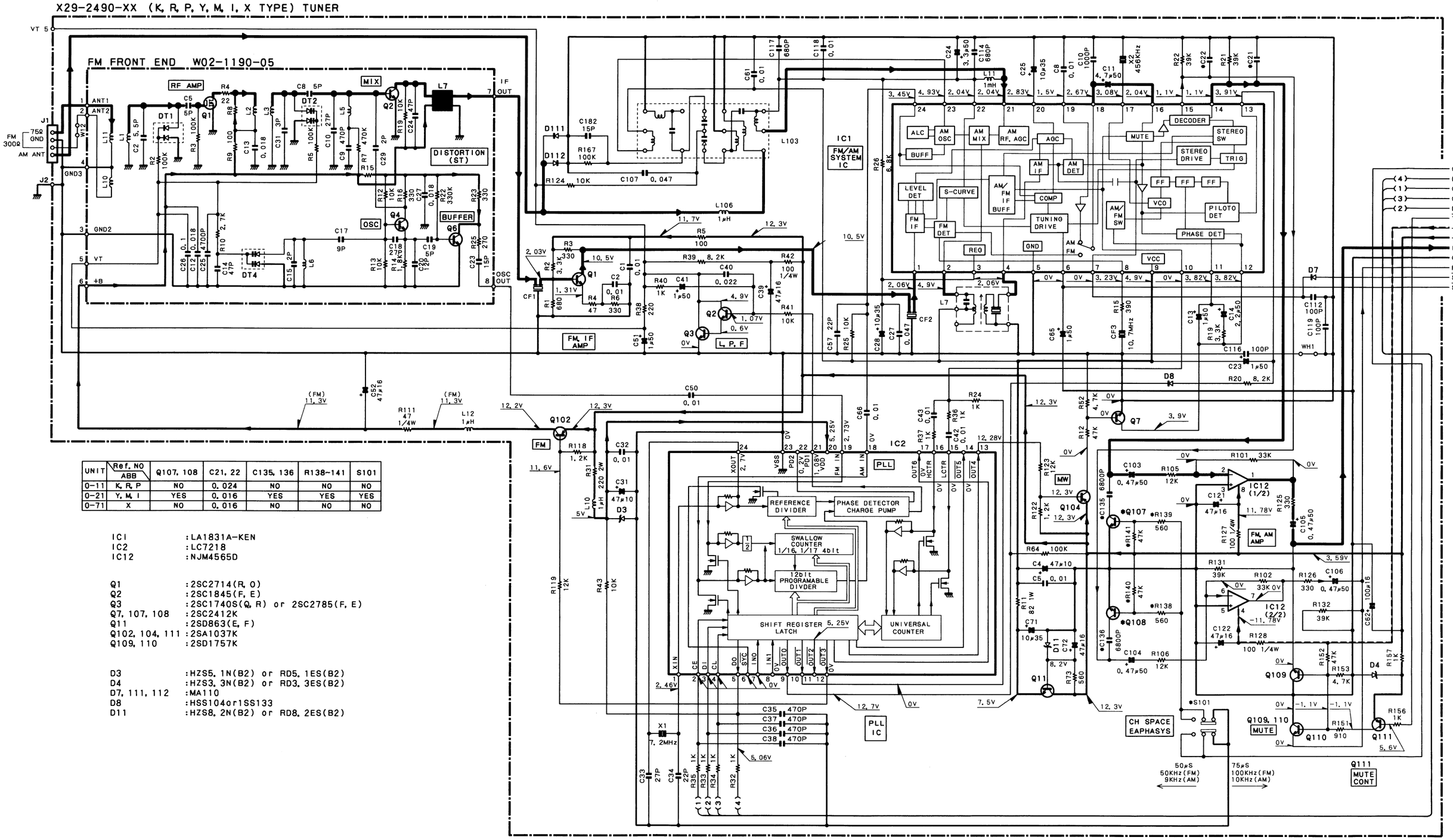

UNIT	Ref. NO / ABB	Q107, 108	C21, 22	C135, 136	R138~141	S101
0-11	K, R, P	NO	0.024	NO	NO	NO
0-21	Y, M, I	YES	0.016	YES	YES	YES
0-71	X	NO	0.016	NO	NO	NO

IC1 :LA1831A-KEN
IC2 :LC7218
IC12 :NJM4565D

Q1 :2SC2714(R, O)
Q2 :2SC1845(F, E)
Q3 :2SC1740S(Q, R) or 2SC2785(F, E)
Q7, 107, 108 :2SC2412K
Q11 :2SD863(E, F)
Q102, 104, 111 :2SA1037K
Q109, 110 :2SD1757K

D3 :HZS5.1N(B2) or RD5.1ES(B2)
D4 :HZS3.3N(B2) or RD3.3ES(B2)
D7, 111, 112 :MA110
D8 :HSS104or1SS133
D11 :HZS8.2N(B2) or RD8.2ES(B2)

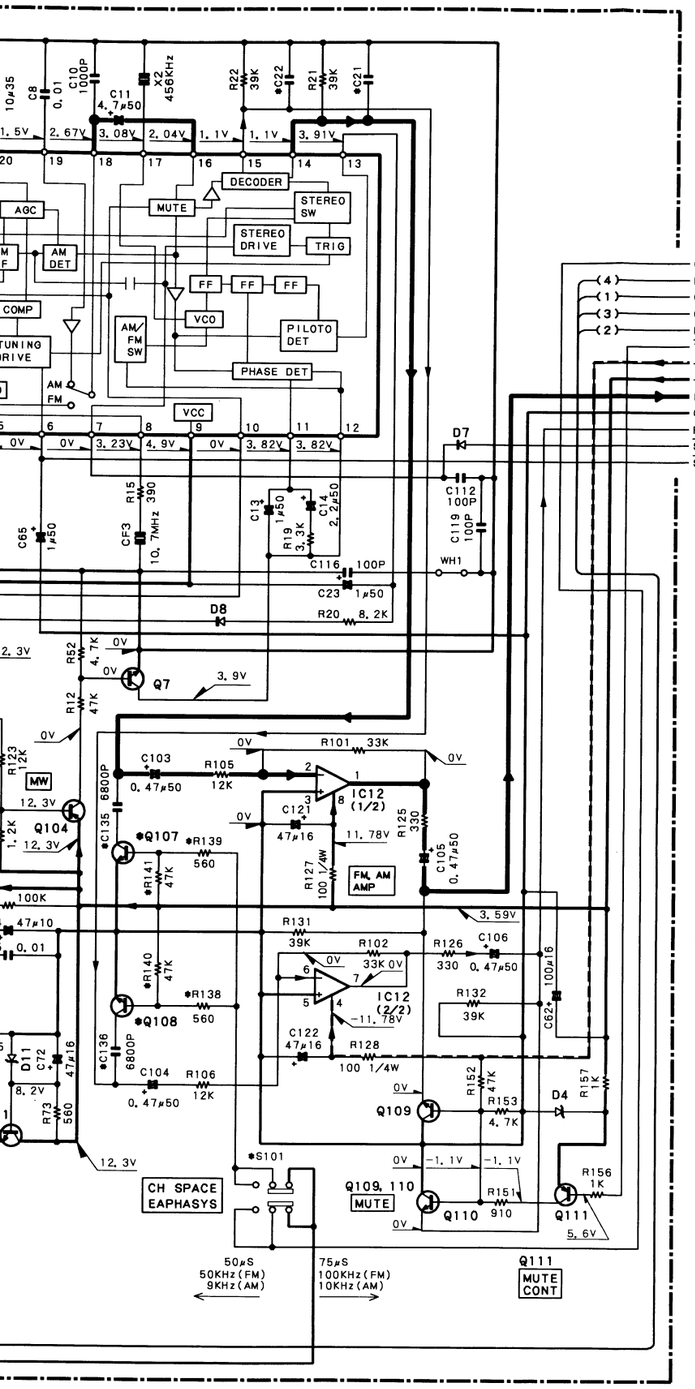

X29-2482-70 (T, E, G TYPE) TUNER

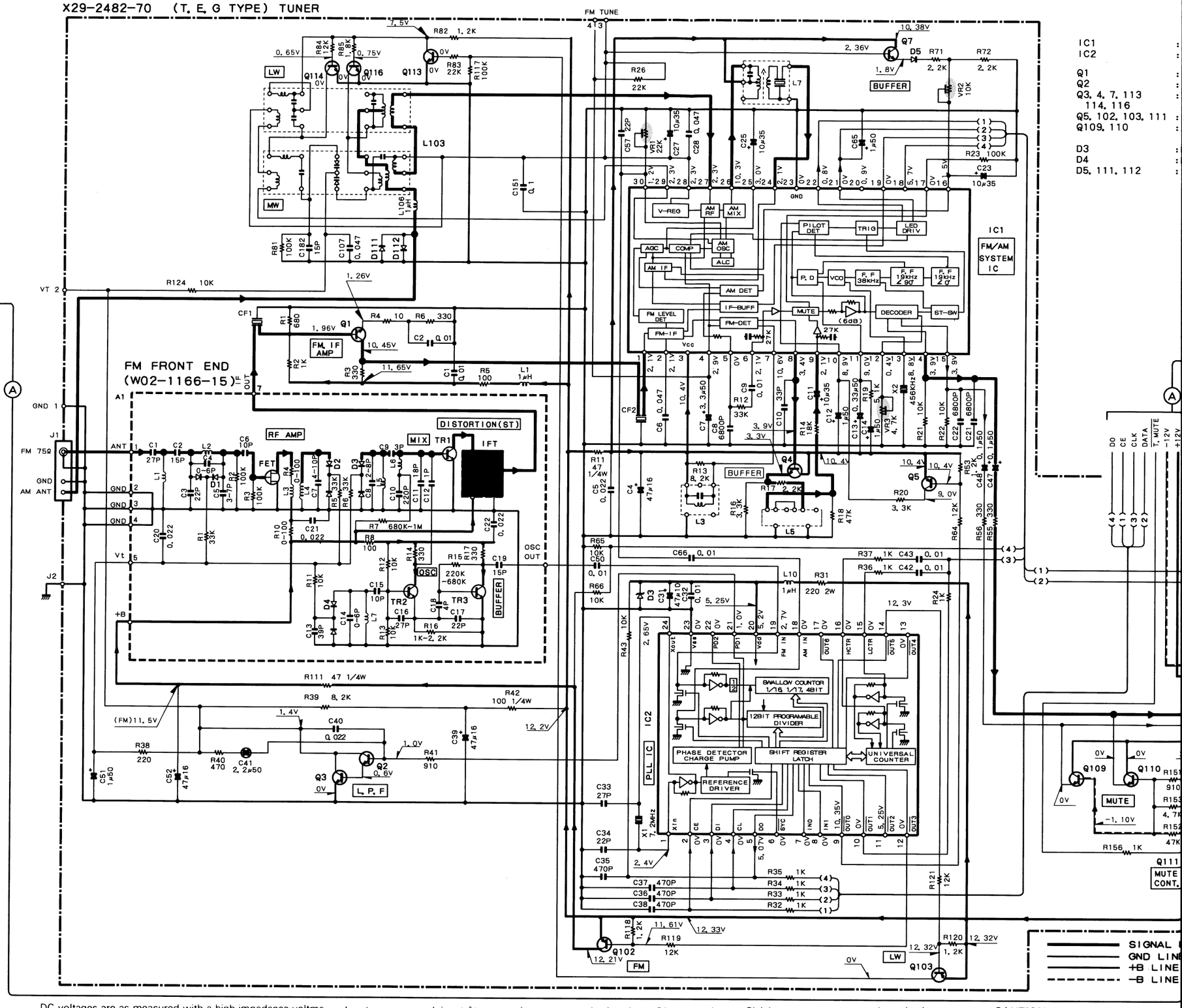

IC1
IC2
Q1
Q2
Q3, 4, 7, 113, 114, 116
Q5, 102, 103, 111
Q109, 110
D3
D4
D5, 111, 112

DC voltages are as measured with a high impedance voltmeter. Values may vary slightly due to variations between individual instruments or/and units.

Les tensions c.c. doivent être mesurées avec un voltmètre à haute impédance. Les valeurs peuvent différer légèrement du fait des variations inhérentes aux appareils et aux instruments de mesure individuels.

Die angegebenen Gleichspannungswerte wurden mit einem hochohmigen Spannungsmesser gemessen. Dabei schwanken die Meßwerte aufgrund von Unterschieden zwischen einzelnen Instrumenten oder Geräten u. U. geringfügig.

CAUTION: For continued safety, repla
nents only with manufacturer's reco
parts list). ⚠ Indicates safety critical co
risk of electric shock, leakage-current or
shall be carried out (exposed parts are
the supply circuit) before the appliance
er.

X29-2482-70 (T, E, G TYPE) TUNER

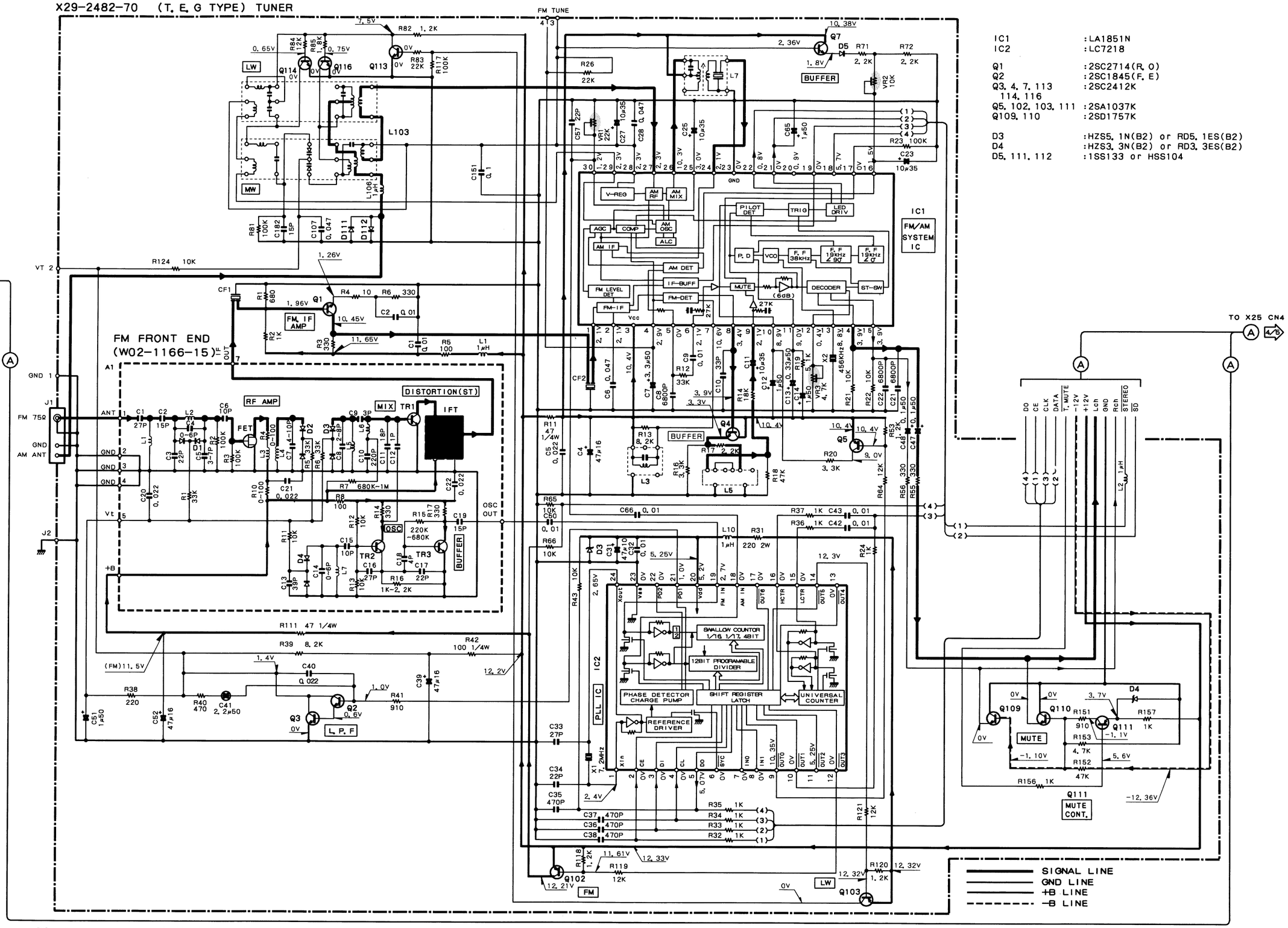

IC1 :LA1851N
IC2 :LC7218

Q1 :2SC2714(R, O)
Q2 :2SC1845(F, E)
Q3, 4, 7, 113, 114, 116 :2SC2412K
Q5, 102, 103, 111 :2SA1037K
Q109, 110 :2SD1757K

D3 :HZS5, 1N(B2) or RD5, 1ES(B2)
D4 :HZS3, 3N(B2) or RD3, 3ES(B2)
D5, 111, 112 :1SS133 or HSS104

DC voltages are as measured with a high impedance voltmeter. Values may vary slightly due to variations between individual instruments or/and units.

Les tensions c.c. doivent être mesurées avec un voltmètre à haute impédance. Les valeurs peuvent différer légèrement du fait des variations inhérentes aux appareils et aux instruments de mesure individuels.

Die angegebenen Gleichspannungswerte wurden mit einem hochohmigen Spannungsmesser gemessen. Dabei schwanken die Meßwerte aufgrund von Unterschieden zwischen einzelnen Instrumenten oder Geräten u. U. geringfügig.

CAUTION: For continued safety, replace safety critical components only with manufacturer's recommended parts (refer to parts list). ⚠ Indicates safety critical components. To reduce the risk of electric shock, leakage-current or resistance measurements shall be carried out (exposed parts are acceptably insulated from the supply circuit) before the appliance is returned to the customer.

Y39-2030-11

RXD-C3/C3L

KENWOOD

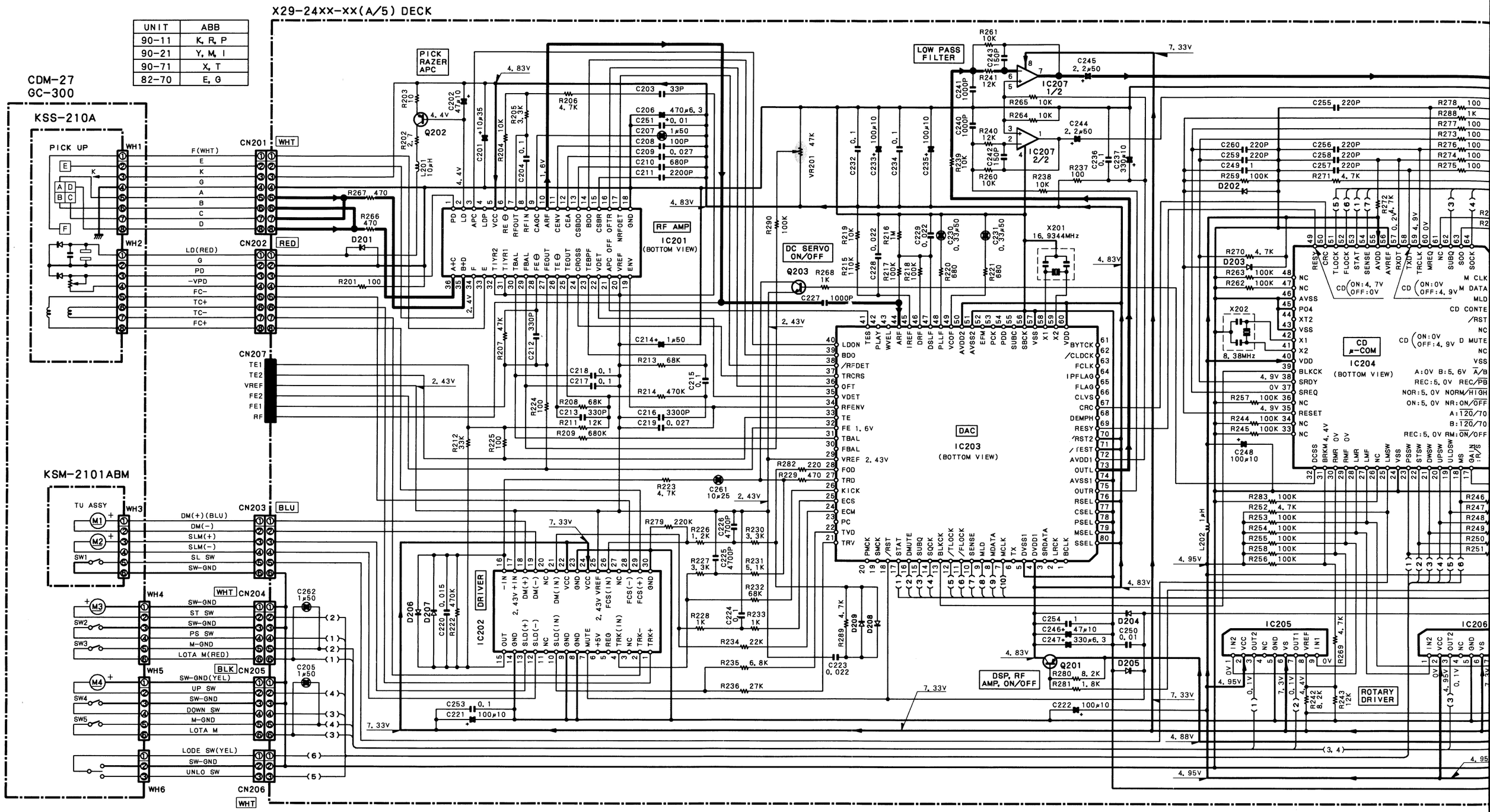

UNIT	ABB
90-11	K, R, P
90-21	Y, M, I
90-71	X, T
82-70	E, G

IC201	:AN8806SB	IC204	:μPD78012BGC-634	Q201	:2SA1534A(R, S)	D201-209	:MA110
IC202	:BA6398FP	IC205, 206	:TA8409S	Q202	:2SA954(L, K)		
IC203	:MN66271RA	IC207	:NJM2100M	Q203	:2SC2412K		

Die angegebenen
hochohmigen Sp
ken die Meßwerte
zelnen Instrument

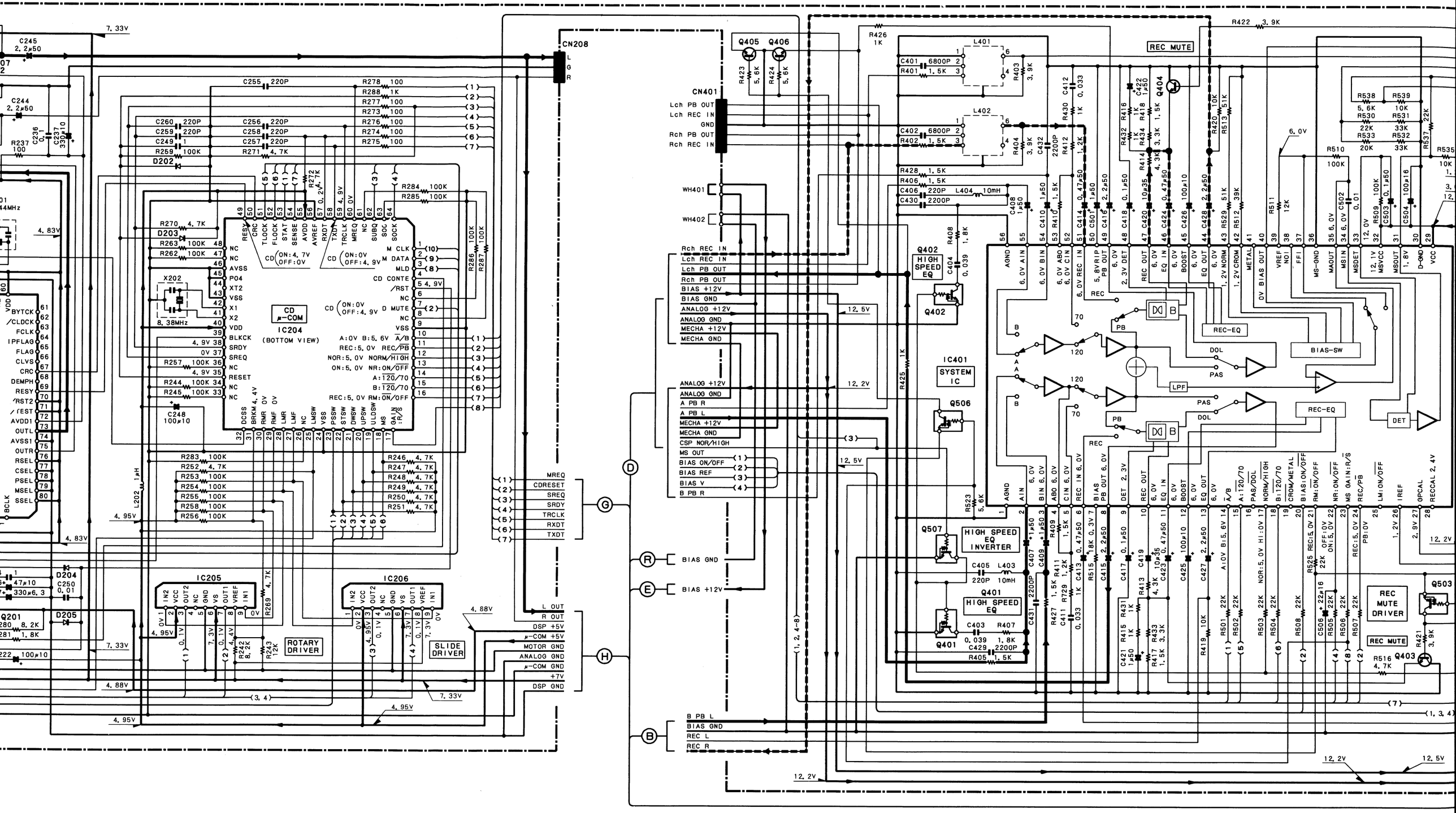

IC401 :HA12182NT

Q401, 402 :DTC124EU
Q403, 404 :2SD1757K
405, 406
Q503, 506 :DTA124ES or UN4112

Q504, 513 :2SC2412K
Q505 :2SC3940A(R, S)
Q507 :DTC124ES

D501 :1SS133 or HSS104
D502 :HZS5, 1N(B2)or RD5, 1E

Die angegebenen Gleichspannungswerte wurden mit einem hochohmigen Spannungsmesser gemessen. Dabei schwanken die Meßwerte aufgrund von Unterschieden zwischen einzelnen Instrumenten oder Geräten u. U. geringfügig.

DC voltages are as measured with a high impedance voltmeter. Values may vary slightly due to variations between individual instruments or/and units.

Les tensions c.c. doivent être mesurées avec un voltmètre à haute impédance. Les valeurs peuvent différer légèrement du fait des variations inhérentes aux appareils et aux instruments de mesure individuels.

CAUTION: For continued safety, replace safety
nents only with manufacturer's recommended
parts list). ⚠ Indicates safety critical component
risk of electric shock, leakage-current or resistance
shall be carried out (exposed parts are acceptabl
the supply circuit) before the appliance is returned
er.

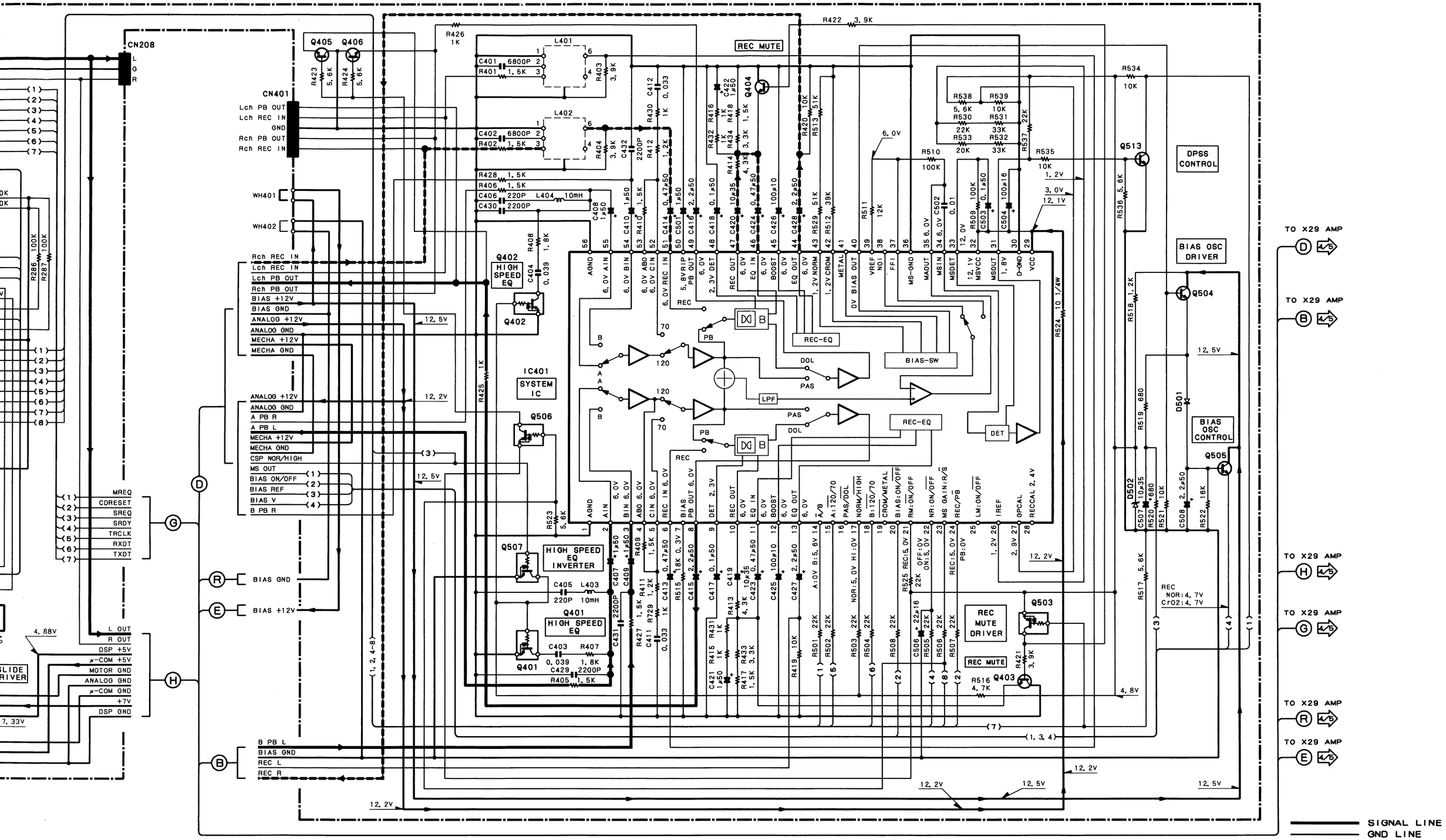

IC401 :HA12182NT

Q401, 402 :DTC124EU
Q403, 404 :2SD1757K
405, 406
Q503, 506 :DTA124ES or UN4112

Q504, 513 :2SC2412K
Q505 :2SC3940A(R, S)
Q507 :DTC124ES

D501 :1SS133 or HSS104
D502 :HZS5, 1N(B2)or RD5, 1ES(B2)

SIGNAL LINE
GND LINE
+B LINE
-B LINE

spannungswerte wurden mit einem smesser gemessen. Dabei schwan- und von Unterschieden zwischen ein- Geräten u. U. geringfügig.

DC voltages are as measured with a high impedance voltmeter. Values may vary slightly due to variations between individual instruments or/and units.

Les tensions c.c. doivent être mesurées avec un voltmètre à haute impédance. Les valeurs peuvent différer légèrement du fait des variations inhérentes aux appareils et aux instruments de mesure individuels.

CAUTION: For continued safety, replace safety critical components only with manufacturer's recommended parts (refer to parts list). ⚠ Indicates safety critical components. To reduce the risk of electric shock, leakage-current or resistance measurements shall be carried out (exposed parts are acceptably insulated from the supply circuit) before the appliance is returned to the customer.

Y39-2030-11

RXD-C3/C3L

KENWOOD

X29-2490-XX (K, R, P, Y, M, I, X TYPE) TUNER

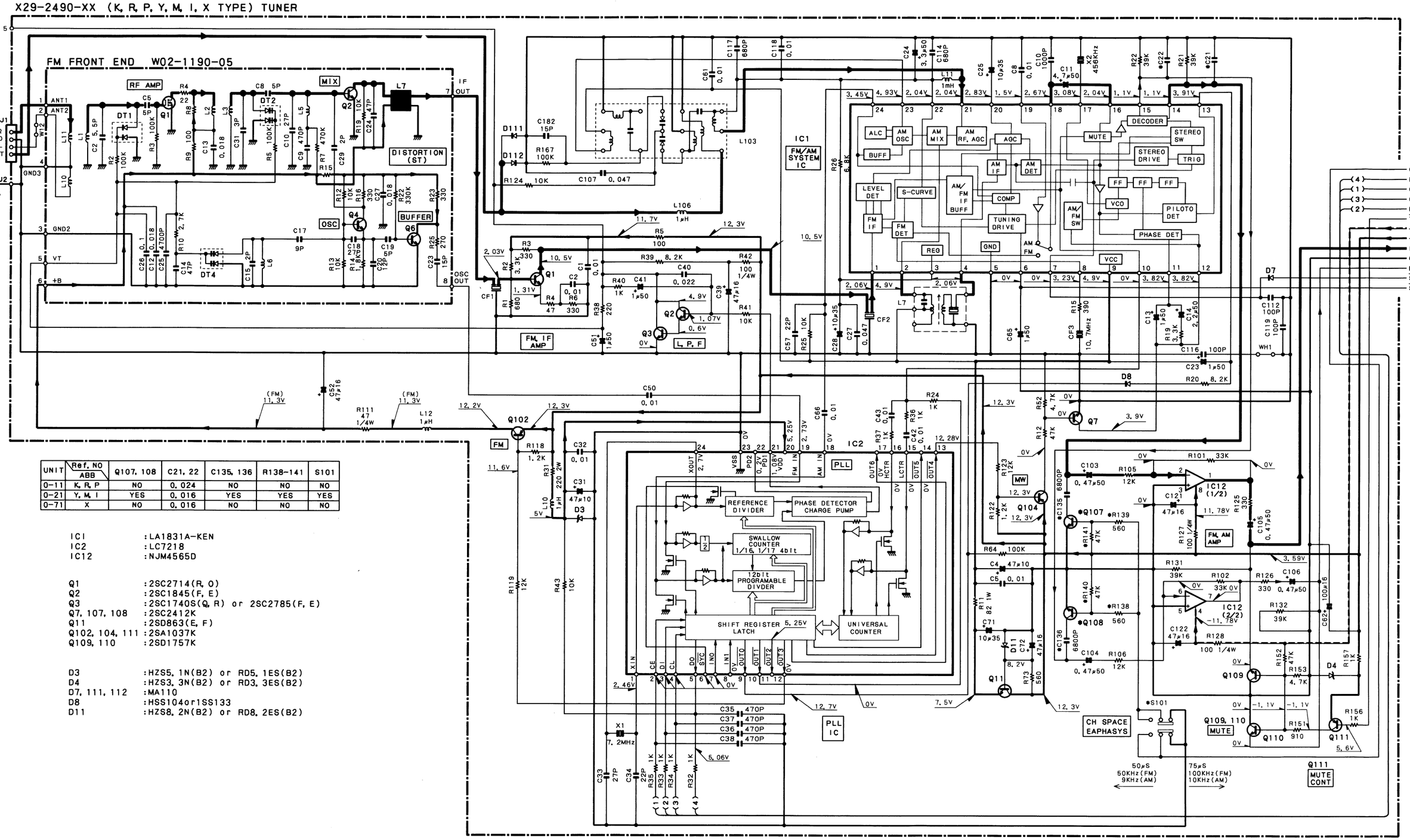

UNIT	Ref. NO / ABB	Q107, 108	C21, 22	C135, 136	R138-141	S101
0-11	K, R, P	NO	0.024	NO	NO	NO
0-21	Y, M, I	YES	0.016	YES	YES	YES
0-71	X	NO	0.016	NO	NO	NO

IC1 :LA1831A-KEN
IC2 :LC7218
IC12 :NJM4565D

Q1 :2SC2714(R, O)
Q2 :2SC1845(F, E)
Q3 :2SC1740S(Q, R) or 2SC2785(F, E)
Q7, 107, 108 :2SC2412K
Q11 :2SD863(E, F)
Q102, 104, 111 :2SA1037K
Q109, 110 :2SD1757K

D3 :HZS5, 1N(B2) or RD5, 1ES(B2)
D4 :HZS3, 3N(B2) or RD3, 3ES(B2)
D7, 111, 112 :MA110
D8 :HSS104or1SS133
D11 :HZS8, 2N(B2) or RD8, 2ES(B2)

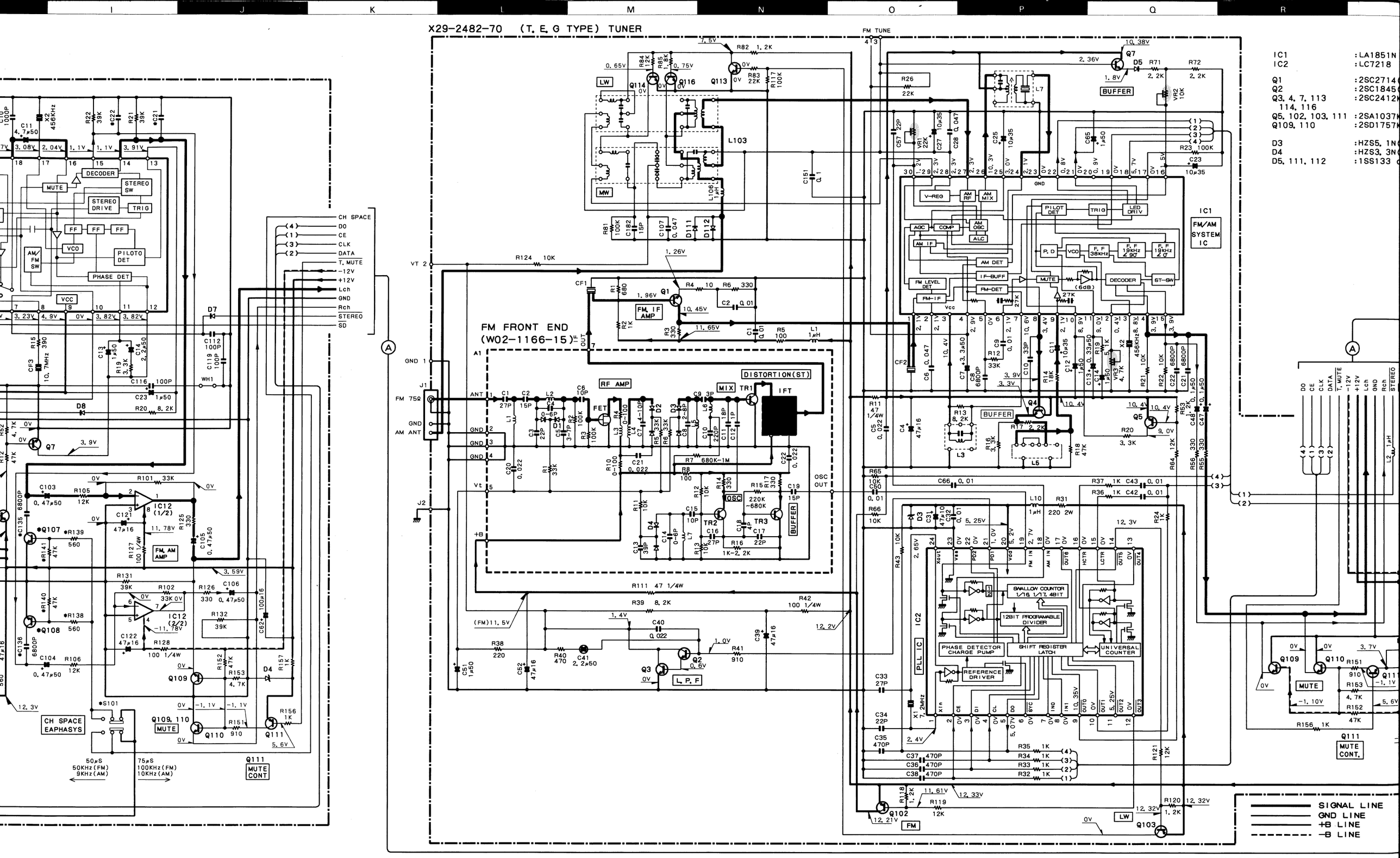

IC1	:LA1851N
IC2	:LC7218
Q1	:2SC2714
Q2	:2SC1845
Q3, 4, 7, 113 114, 116	:2SC2412K
Q5, 102, 103, 111	:2SA1037K
Q109, 110	:2SD1757K
D3	:HZS5, 1N
D4	:HZS3, 3N
D5, 111, 112	:1SS133

DC voltages are as measured with a high impedance voltmeter. Values may vary slightly due to variations between individual instruments or/and units.

Les tensions c.c. doivent être mesurées avec un voltmètre à haute impédance. Les valeurs peuvent différer légèrement du fait des variations inhérentes aux appareils et aux instruments de mesure individuels.

Die angegebenen Gleichspannungswerte wurden mit einem hochohmigen Spannungsmesser gemessen. Dabei schwanken die Meßwerte aufgrund von Unterschieden zwischen einzelnen Instrumenten oder Geräten u. U. geringfügig.

CAUTION: For continued safety, replace safety nents only with manufacturer's recommende parts list). ⚠ Indicates safety critical component risk of electric shock, leakage-current or resistanc shall be carried out (exposed parts are acceptabl the supply circuit) before the appliance is returne er.

X29-2482-70 (T, E, G TYPE) TUNER

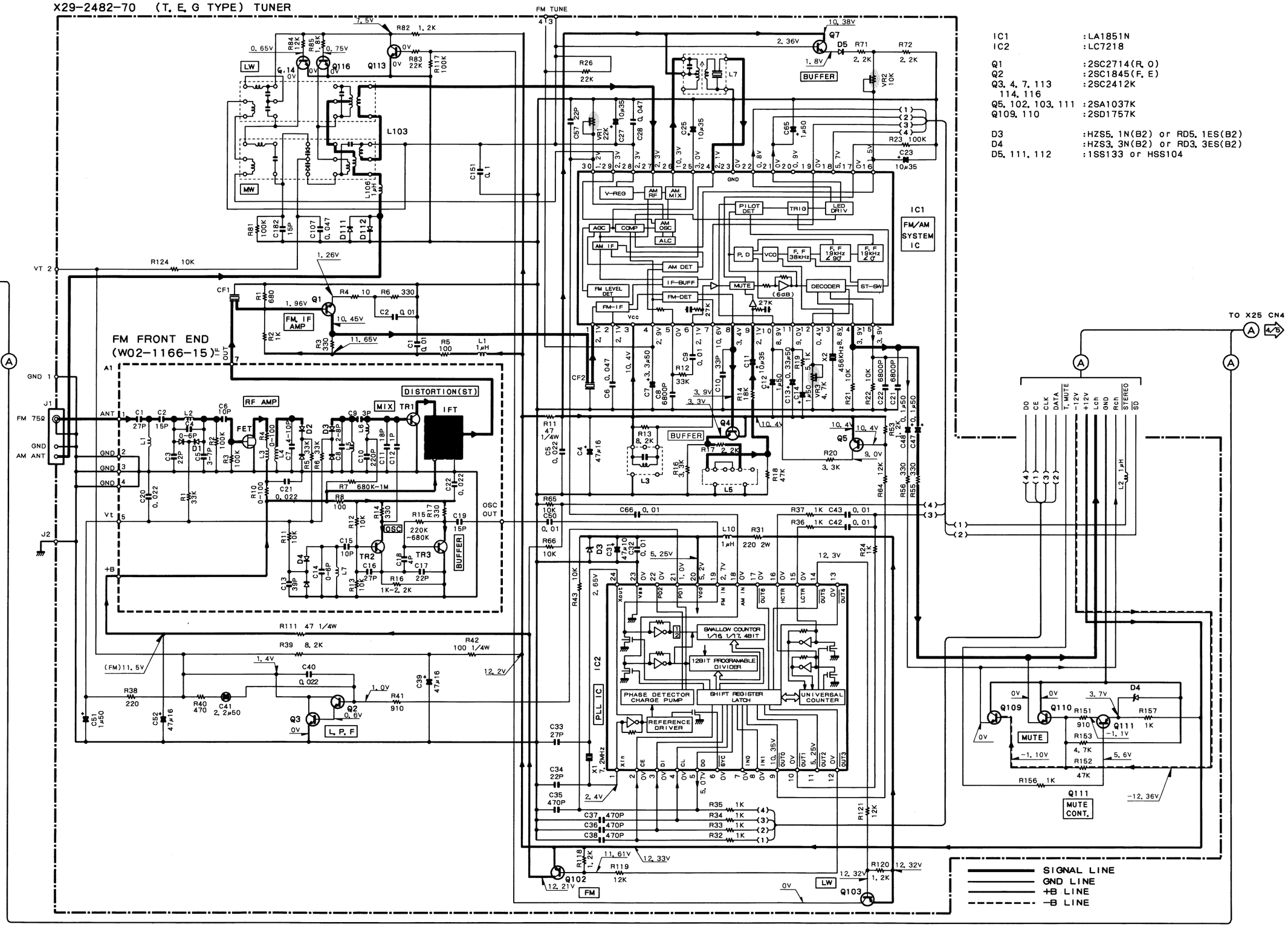

IC1	:LA1851N
IC2	:LC7218
Q1	:2SC2714(R, O)
Q2	:2SC1845(F, E)
Q3, 4, 7, 113 114, 116	:2SC2412K
Q5, 102, 103, 111	:2SA1037K
Q109, 110	:2SD1757K
D3	:HZS5, 1N(B2) or RD5, 1ES(B2)
D4	:HZS3, 3N(B2) or RD3, 3ES(B2)
D5, 111, 112	:1SS133 or HSS104

DC voltages are as measured with a high impedance voltmeter. Values may vary slightly due to variations between individual instruments or/and units.

Les tensions c.c. doivent être mesurées avec un voltmètre à haute impédance. Les valeurs peuvent différer légèrement du fait des variations inhérentes aux appareils et aux instruments de mesure individuels.

Die angegebenen Gleichspannungswerte wurden mit einem hochohmigen Spannungsmesser gemessen. Dabei schwanken die Meßwerte aufgrund von Unterschieden zwischen einzelnen Instrumenten oder Geräten u. U. geringfügig.

CAUTION: For continued safety, replace safety critical components only with manufacturer's recommended parts (refer to parts list). ⚠ Indicates safety critical components. To reduce the risk of electric shock, leakage-current or resistance measurements shall be carried out (exposed parts are acceptably insulated from the supply circuit) before the appliance is returned to the customer.

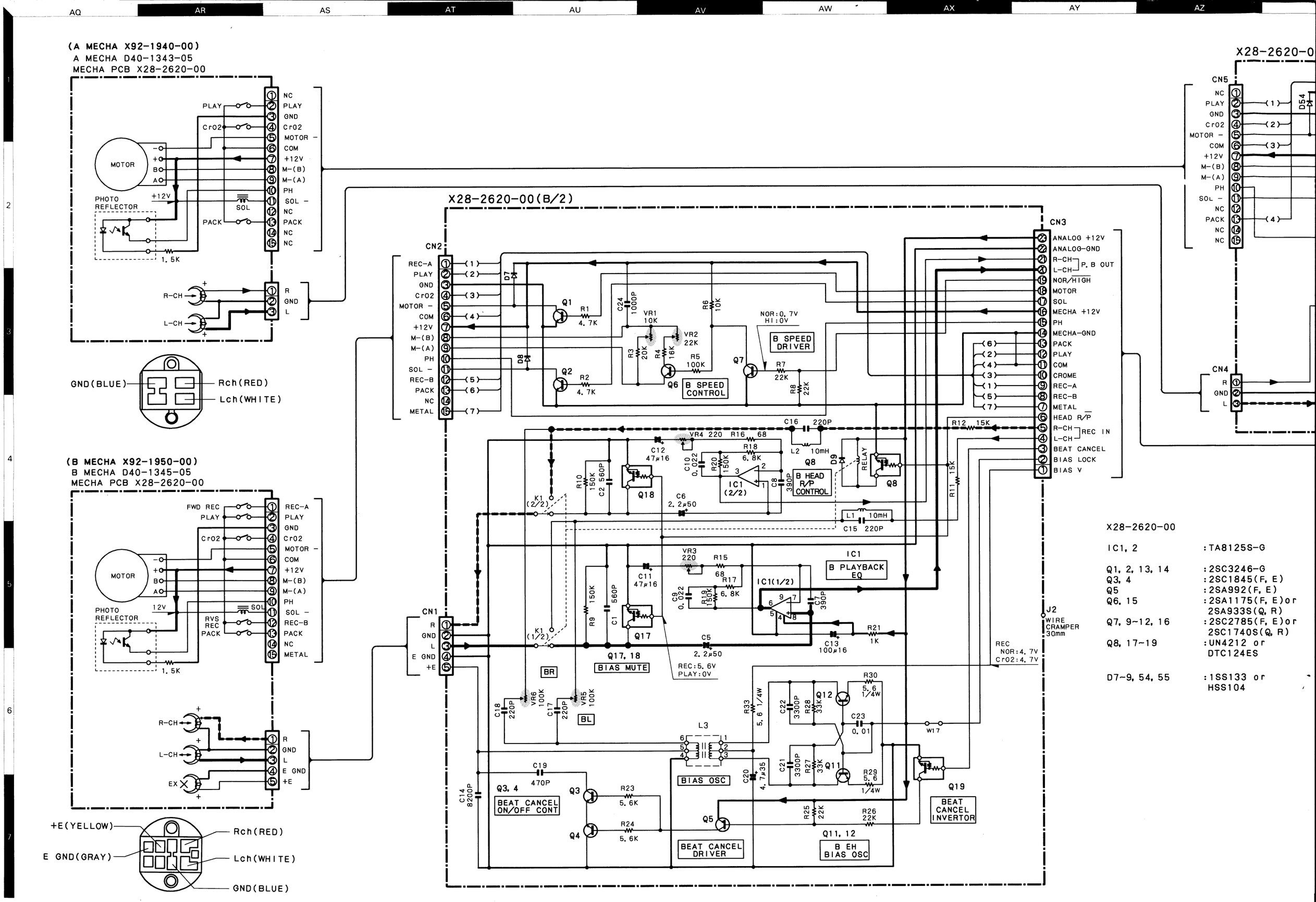
(A MECHA X92-1940-00)
A MECHA D40-1343-05
MECHA PCB X28-2620-00
MOTOR
PHOTO REFLECTOR
1.5K
PLAY
CrO2
PACK
SOL
+12V
NC
PLAY
GND
CrO2
MOTOR -
COM
+12V
M-(B)
M-(A)
PH
SOL -
NC
PACK
NC
NC
R-CH
L-CH
R
GND
L
GND(BLUE)
Rch(RED)
Lch(WHITE)
(B MECHA X92-1950-00)
B MECHA D40-1345-05
MECHA PCB X28-2620-00
FWD REC
PLAY
CrO2
RVS REC PACK
12V
REC-A
PLAY
GND
CrO2
MOTOR -
COM
+12V
M-(B)
M-(A)
PH
SOL -
REC-B
PACK
NC
METAL
EX
E GND
+E
+E(YELLOW)
E GND(GRAY)
Rch(RED)
Lch(WHITE)
GND(BLUE)
X28-2620-00(B/2)
CN2
CN1
CN3
CN4
CN5
X28-2620-0
ANALOG +12V
ANALOG-GND
R-CH
L-CH
P. B OUT
NOR/HIGH
MOTOR
SOL
MECHA +12V
PH
MECHA-GND
PACK
PLAY
COM
CROME
REC-A
REC-B
METAL
HEAD R/P
REC IN
BEAT CANCEL
BIAS LOCK
BIAS V
B SPEED DRIVER
B SPEED CONTROL
NOR:0.7V
HI:0V
B HEAD R/P CONTROL
RELAY
B PLAYBACK EQ
BIAS MUTE
REC:5.6V
PLAY:0V
BIAS OSC
BEAT CANCEL ON/OFF CONT
BEAT CANCEL DRIVER
BEAT CANCEL INVERTOR
B EH BIAS OSC
J2
WIRE CRAMPER 30mm
REC
NOR:4.7V
CrO2:4.7V
X28-2620-00
IC1, 2 :TA8125S-G
Q1, 2, 13, 14 :2SC3246-G
Q3, 4 :2SC1845(F, E)
Q5 :2SA992(F, E)
Q6, 15 :2SA1175(F, E)or 2SA933S(Q, R)
Q7, 9~12, 16 :2SC2785(F, E)or 2SC1740S(Q, R)
Q8, 17~19 :UN4212 or DTC124ES
D7~9, 54, 55 :1SS133 or HSS104

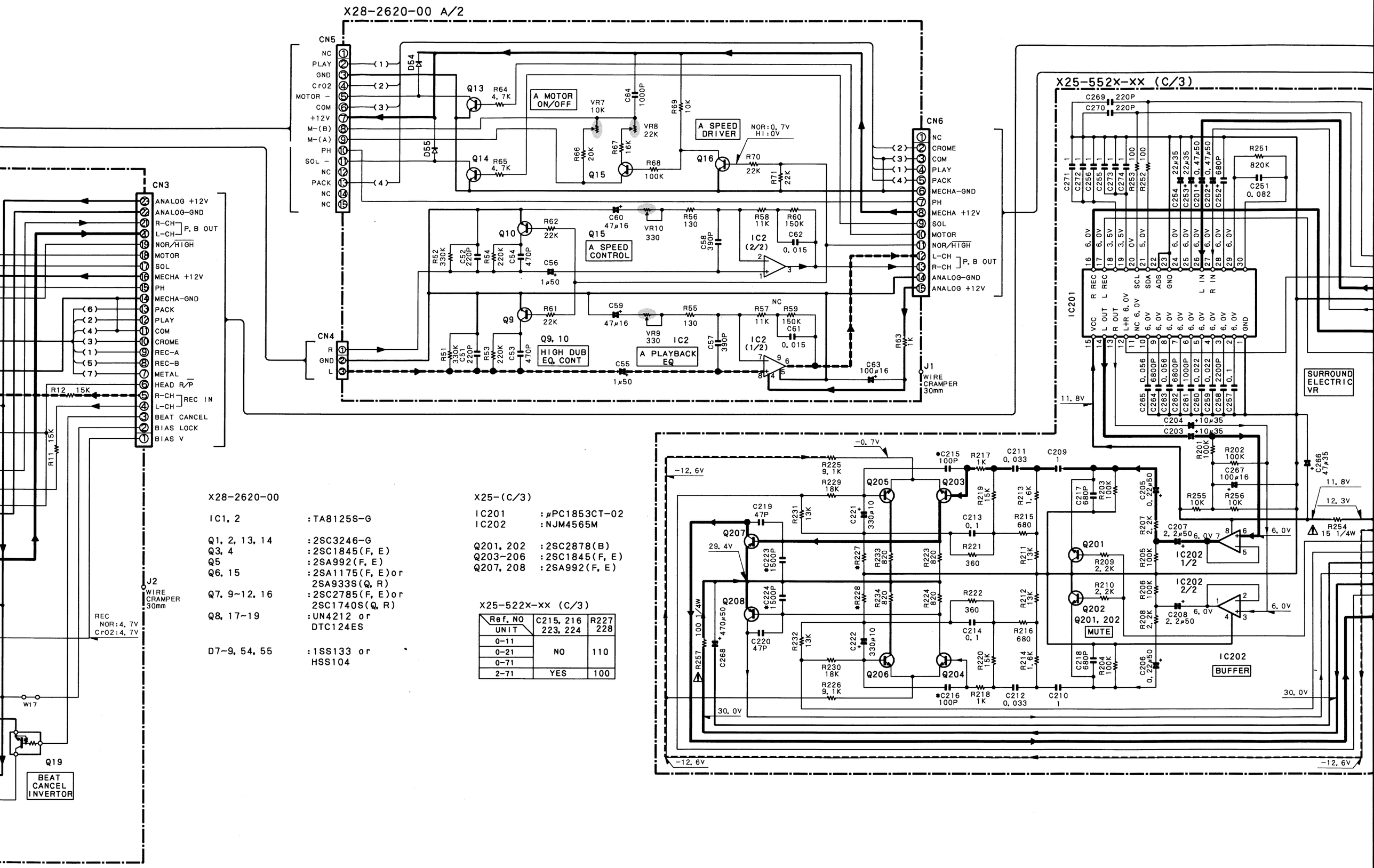

X28-2620-00

IC1, 2	:TA8125S-G
Q1, 2, 13, 14	:2SC3246-G
Q3, 4	:2SC1845(F, E)
Q5	:2SA992(F, E)
Q6, 15	:2SA1175(F, E)or 2SA933S(Q, R)
Q7, 9~12, 16	:2SC2785(F, E)or 2SC1740S(Q, R)
Q8, 17~19	:UN4212 or DTC124ES
D7~9, 54, 55	:1SS133 or HSS104

X25-(C/3)

IC201	:μPC1853CT-02
IC202	:NJM4565M
Q201, 202	:2SC2878(B)
Q203~206	:2SC1845(F, E)
Q207, 208	:2SA992(F, E)

X25-522x-xx (C/3)

Ref. NO / UNIT	C215, 216 223, 224	R227 228
0-11	NO	110
0-21		
0-71		
2-71	YES	100

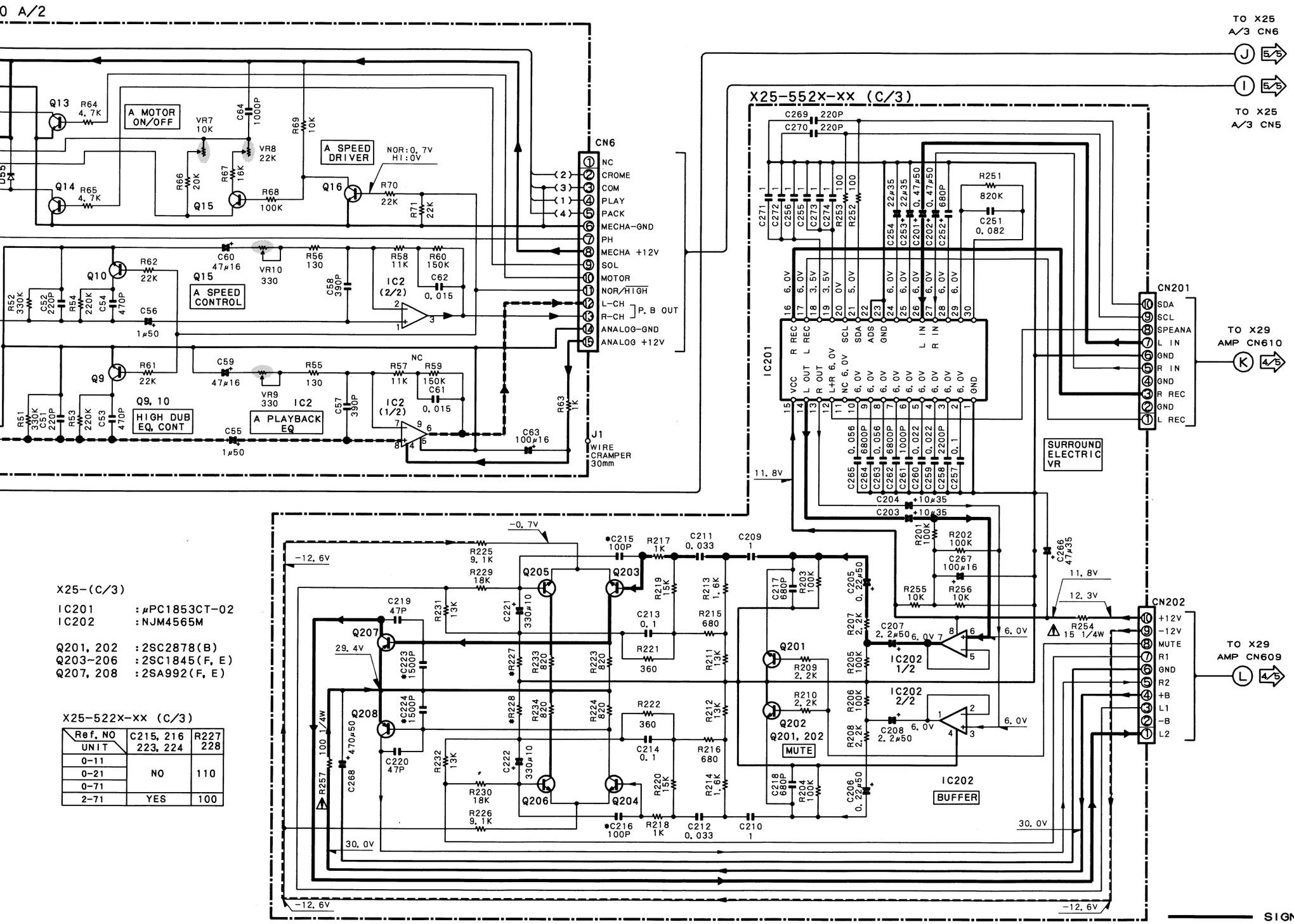

X25-(C/3)

IC201	: μPC1853CT-02
IC202	: NJM4565M
Q201, 202	: 2SC2878(B)
Q203~206	: 2SC1845(F, E)
Q207, 208	: 2SA992(F, E)

X25-522X-XX (C/3)

Ref. NO / UNIT	C215, 216 223, 224	R227 228
0-11	NO	110
0-21		
0-71		
2-71	YES	100

DC voltages are as measured with a high impedance voltmeter. Values may vary slightly due to variations between individual instruments or/and units.

Les tensions c.c. doivent être mesurées avec un voltmètre à haute impédance. Les valeurs peuvent différer légèrement du fait des variations inhérentes aux appareils et aux instruments de mesure individuels.

Die angegebenen Gleichspannungswerte wurden mit einem hochohmigen Spannungsmesser gemessen. Dabei schwanken die Meßwerte aufgrund von Unterschieden zwischen einzelnen Instrumenten oder Geräten u. U. geringfügig.

CAUTION: For continued safety, replace safety critical components only with manufacturer's recommended parts (refer to parts list). ⚠ Indicates safety critical components. To reduce the risk of electric shock, leakage-current or resistance measurements shall be carried out (exposed parts are acceptably insulated from the supply circuit) before the appliance is returned to the customer.

SIGNAL LINE
GND LINE
+B LINE
-B LINE

3/5

Y39-2030-11

RXD-C3/C3L

KENWOOD

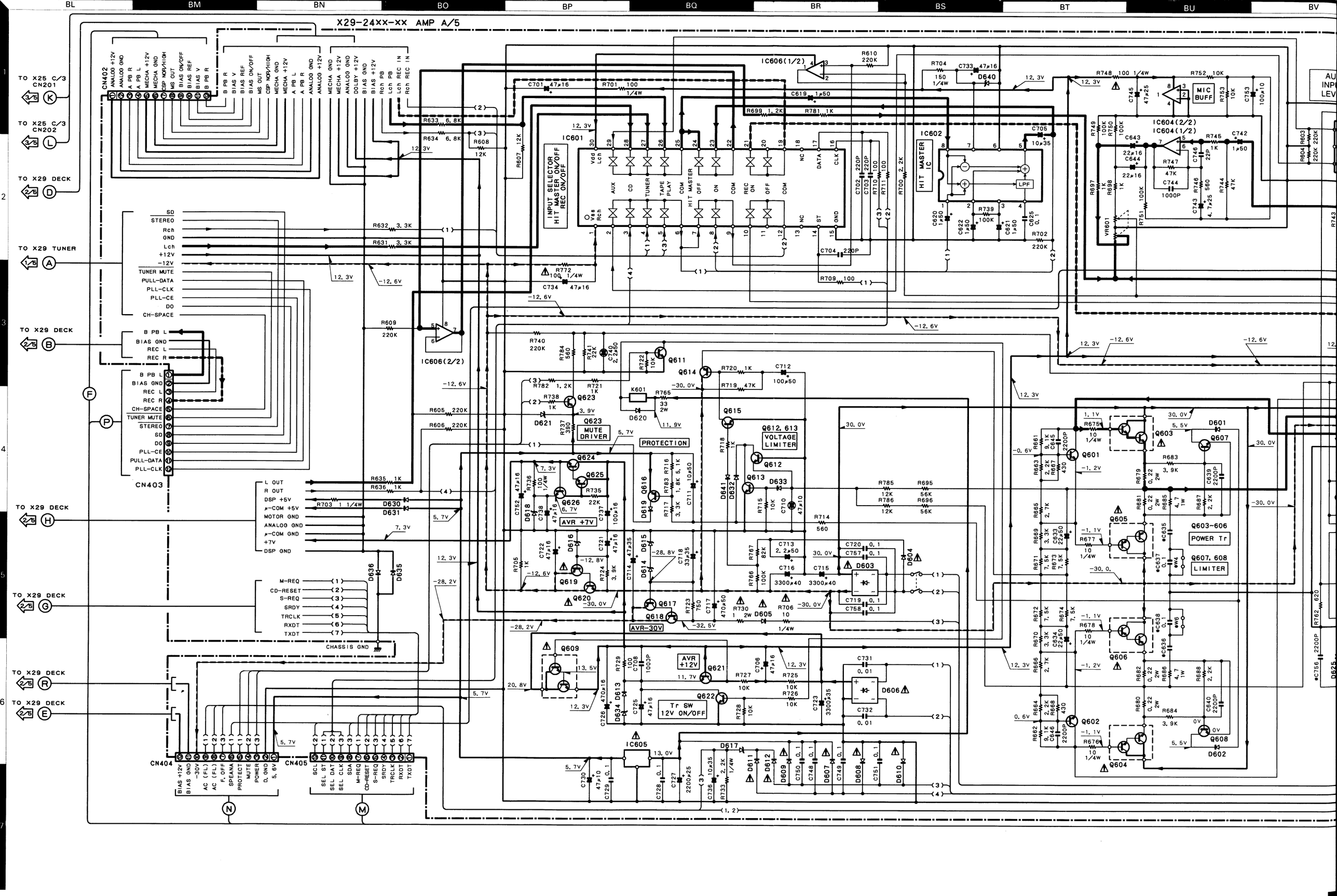
X29-24xx-xx AMP A/5
CN402
CN403
CN404
CN405
IC601
INPUT SELECTOR
HIT MASTER ON/OFF
REC ON/OFF
IC602
HIT MASTER IC
IC604(2/2)
IC604(1/2)
MIC BUFF
IC606(1/2)
IC606(2/2)
IC605
MUTE DRIVER
PROTECTION
VOLTAGE LIMITER
AVR +7V
AVR-30V
AVR +12V
Tr SW 12V ON/OFF
Q603-606
POWER Tr
Q607, 608
LIMITER
TO X25 C/3 CN201
TO X25 C/3 CN202
TO X29 DECK
TO X29 TUNER
CHASSIS GND

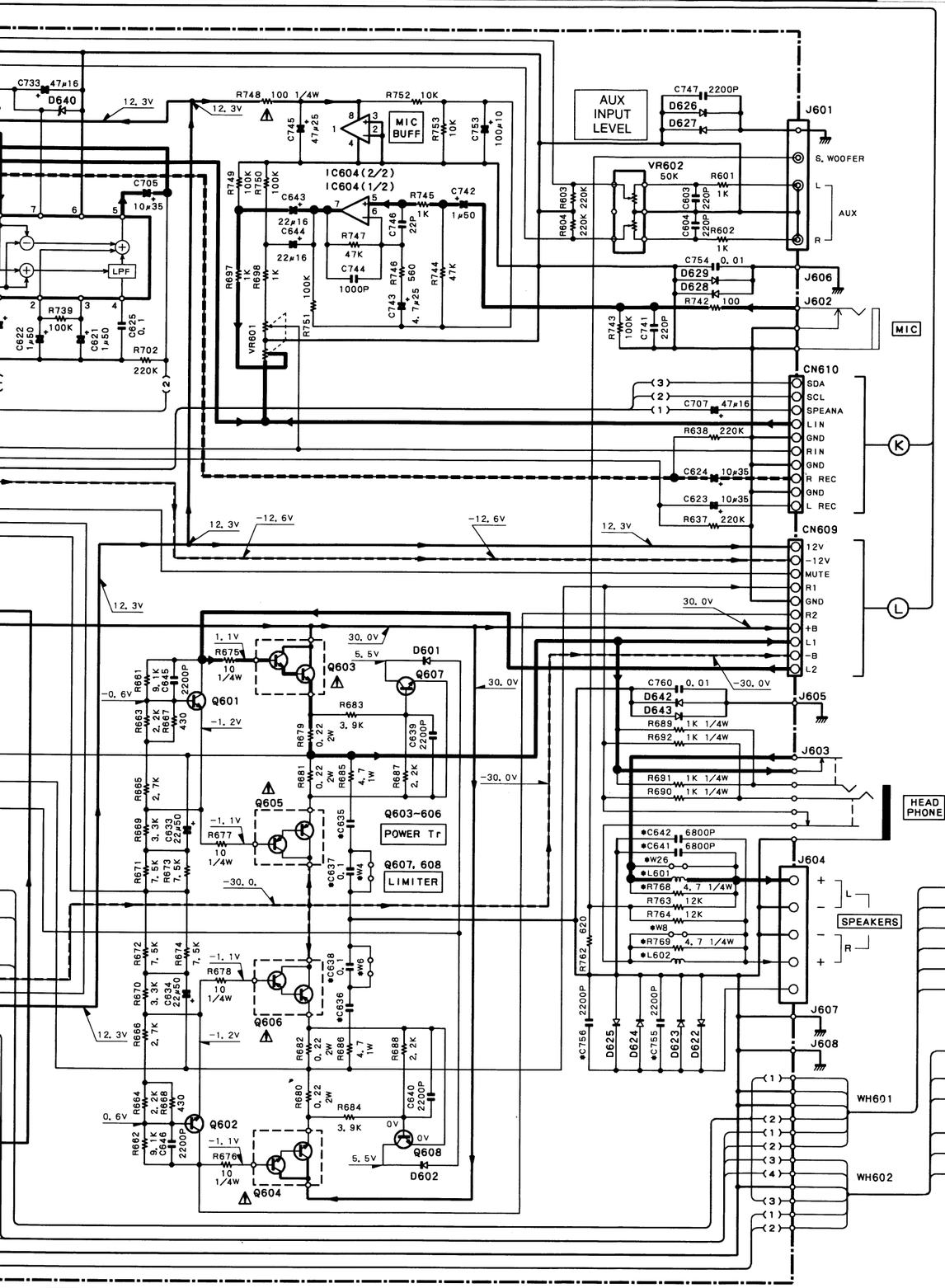

X29-24XX-XX

IC601	:NJU7313AM	Q601, 602	:2SC4137(V, W)	D601, 602, 611, 612 619, 620, 631, 641	:1SS133 or HSS104
IC602	:CXA1642M	Q603, 604	:2SD2493	D603	:D3SBA20F03 or RBV-402LFA
IC604	:NJM4565M	Q605, 606	:2SB1624	D604	:1SS131 or HSS104A
IC605	:TA78057S	Q607, 608	:2SC1845(F, E)	D605, 607~610 630, 631	:S5688B or 1SR139-100
		Q609	:2SD1893	D606	:KBP02ML-6127
		Q612, 613, 621 622, 625, 626	:2SC2412K	D613, 618	:HZS6, 8N(B2) or RD6, 8ES(B2)
		Q611	:2SC3246(H, J)	D614	:HZS16N(B2) or RD16ES(B2)
		Q614	:2SA954(L, K)	D615, 616	:HZS13N(B2) or RD13ES(B2)
		Q615~617	:2SA1037K	D617	:HZS2, 7N(B2) or RD2, 7ES(B2)
		Q618, 620, 624	:2SD2012	D621	:HZS3, 9N(B2) or RD3, 9ES(B2)
		Q619, 623	:2SA933S(Q, R)	D622~629, 632 633, 635, 636	:MA110
				D634	:HZS5, 1N(B2) or RD5, 1ES(B2)
				D640	:HZS10N(B2)

X29-24XX-XX

UNIT	Ref. NO / ABB	C635, 636	C63 C64 C75
90-11	K, R, P	0.047μ	
90-21	Y, M, I		
90-71	X		
82-70	T, E, G	0.1μ	Y

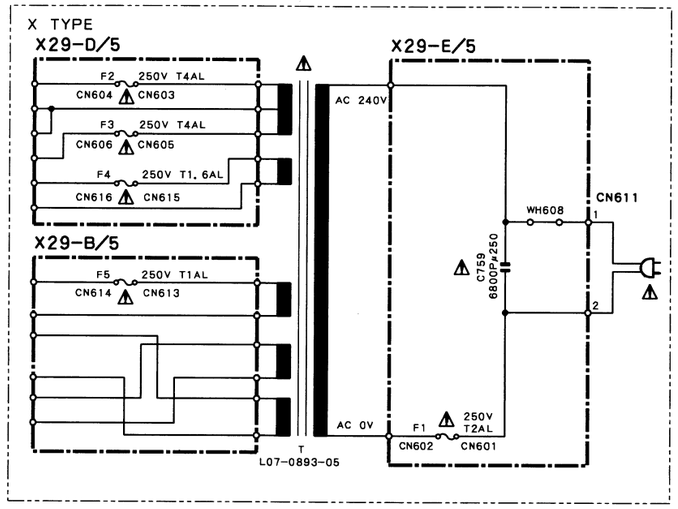

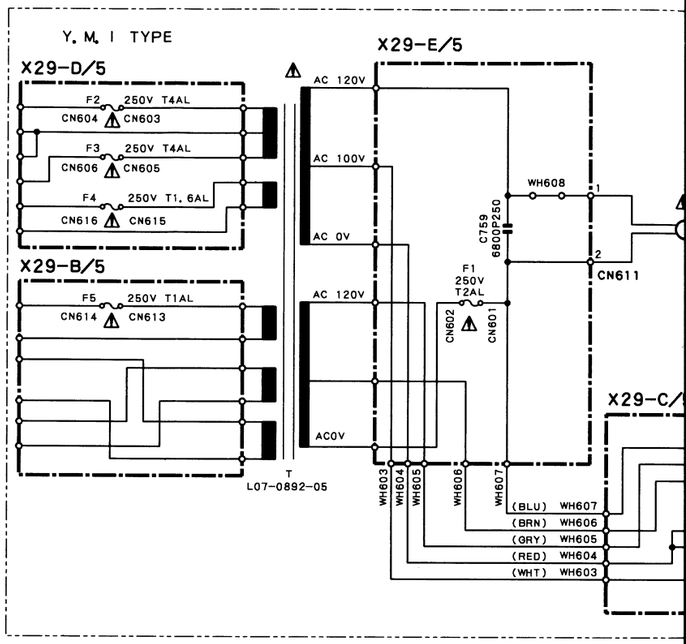

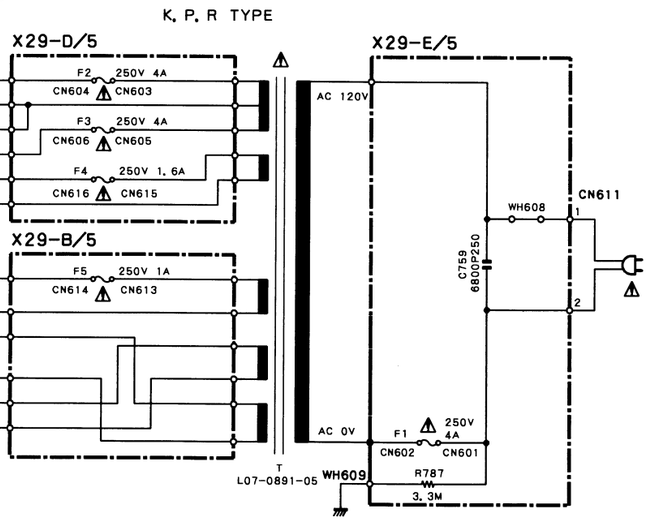

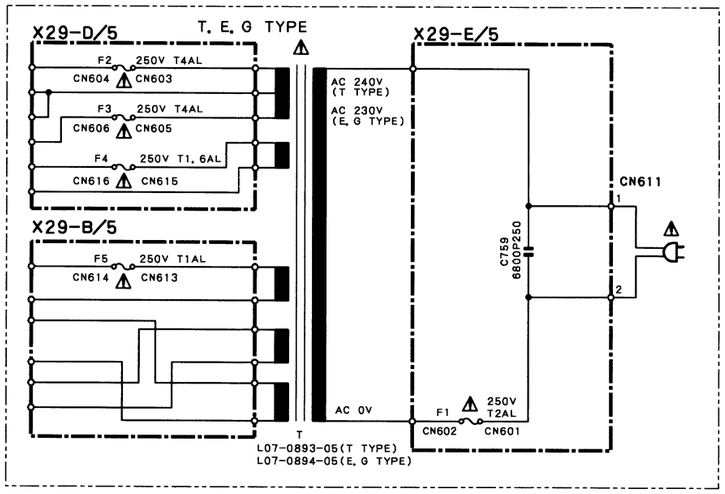

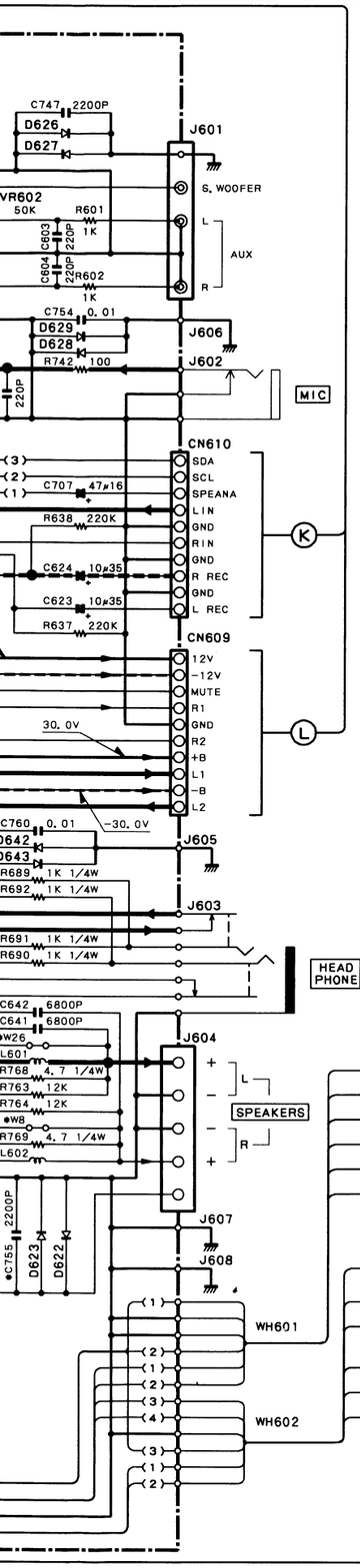

X29-24XX-XX

IC601	:NJU7313AM	Q601, 602	:2SC4137(V, W)	D601, 602, 611, 612 619, 620, 631, 641	:1SS133 or HSS104
IC602	:CXA1642M	Q603, 604	:2SD2493	D603	:D3SBA20F03 or RBV-402LFA
IC604	:NJM4565M	Q605, 606	:2SB1624	D604	:1SS131 or HSS104A
IC605	:TA78057S	Q607, 608	:2SC1845(F, E)	D605, 607~610 630, 631	:S5688B or 1SR139-100
		Q609	:2SD1893	D606	:KBP02ML-6127
		Q612, 613, 621 622, 625, 626	:2SC2412K	D613, 618	:HZS6, 8N(B2) or RD6, 8ES(B2)
		Q611	:2SC3246(H, J)	D614	:HZS16N(B2) or RD16ES(B2)
		Q614	:2SA954(L, K)	D615, 616	:HZS13N(B2) or RD13ES(B2)
		Q615~617	:2SA1037K	D617	:HZS2, 7N(B2) or RD2, 7ES(B2)
		Q618, 620, 624	:2SD2012	D621	:HZS3, 9N(B2) or RD3, 9ES(B2)
		Q619, 623	:2SA933S(Q, R)	D622~629, 632 633, 635, 636	:MA110
				D634	:HZS5, 1N(B2) or RD5, 1ES(B2)
				D640	:HZS10N(B2)

X29-24XX-XX

UNIT	Ref. NO / ABB	C635, 636	C637, 638 C641, 642 C755, 756	R768, 769	L601, 602
90-11	K, R, P	0. 047μ	NO	NO	NO
90-21	Y, M, I				
90-71	X				
82-70	T, E, G	0. 1μ	YES	YES	YES

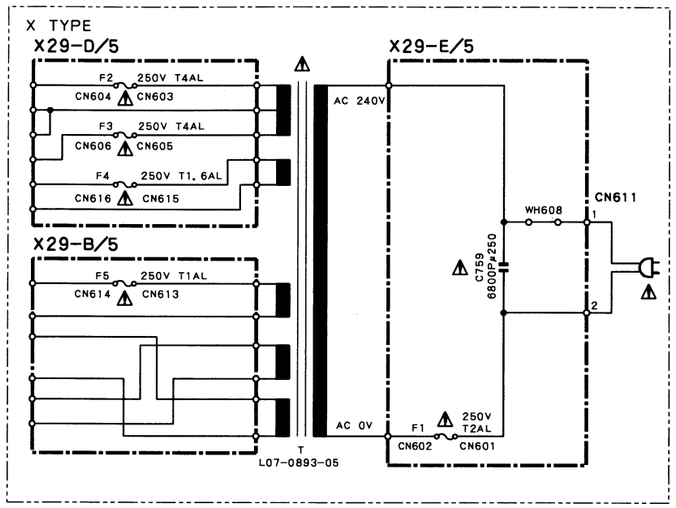

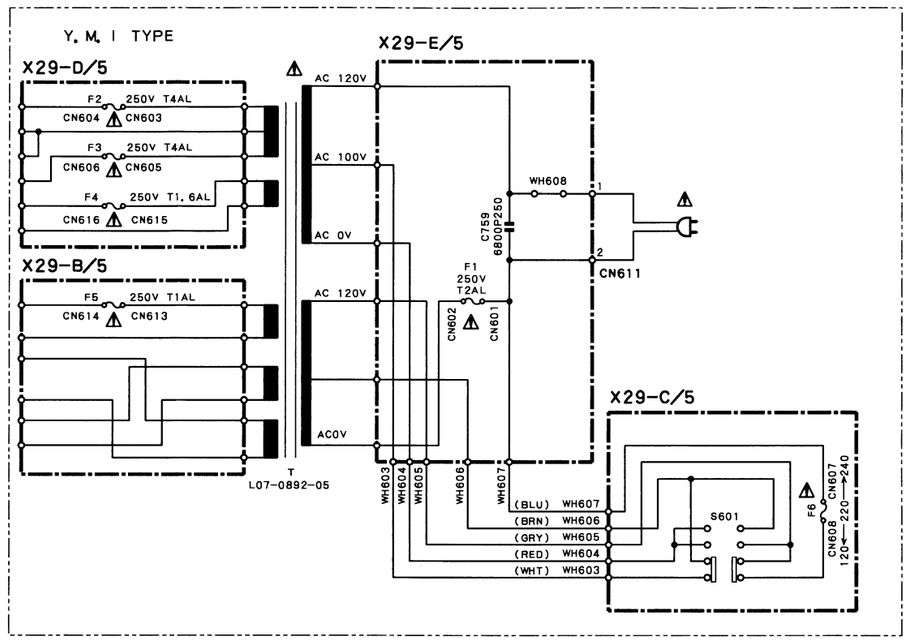

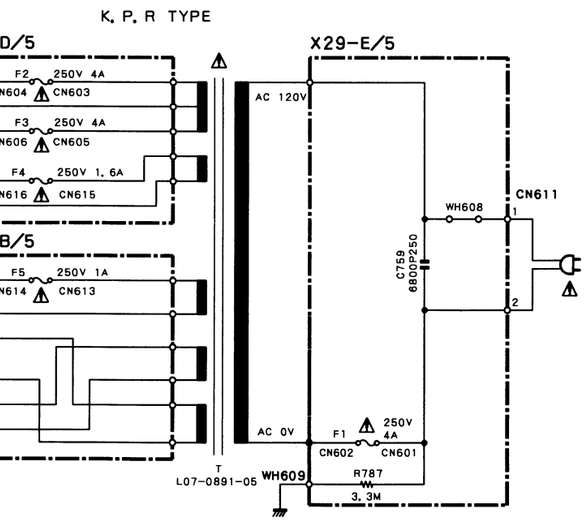

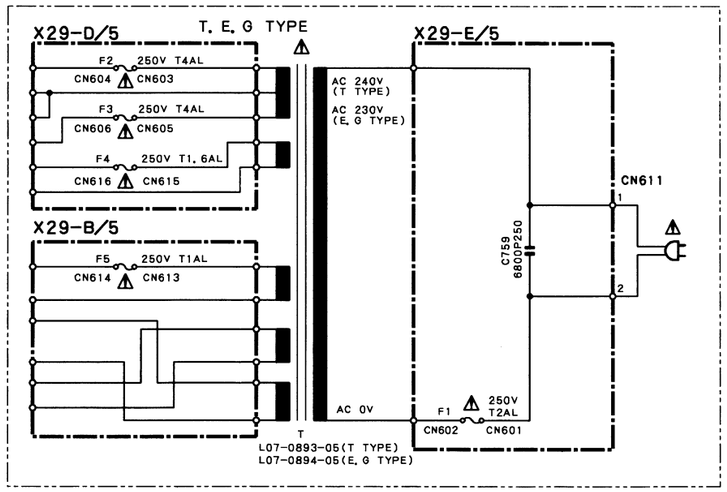

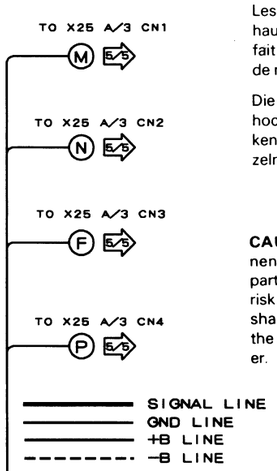

DC voltages are as measured with a high impedance voltmeter. Values may vary slightly due to variations between individual instruments or/and units.

Les tensions c.c. doivent être mesurées avec un voltmètre à haute impédance. Les valeurs peuvent différer légèrement du fait des variations inhérentes aux appareils et aux instruments de mesure individuels.

Die angegebenen Gleichspannungswerte wurden mit einem hochohmigen Spannungsmesser gemessen. Dabei schwanken die Meßwerte aufgrund von Unterschieden zwischen einzelnen Instrumenten oder Geräten u. U. geringfügig.

CAUTION: For continued safety, replace safety critical components only with manufacturer's recommended parts (refer to parts list). ⚠ Indicates safety critical components. To reduce the risk of electric shock, leakage-current or resistance measurements shall be carried out (exposed parts are acceptably insulated from the supply circuit) before the appliance is returned to the customer.

Y39-2030-11

RXD-C3/C3L

KENWOOD

DISPLAY UNIT X25-552X-XX (A/3)

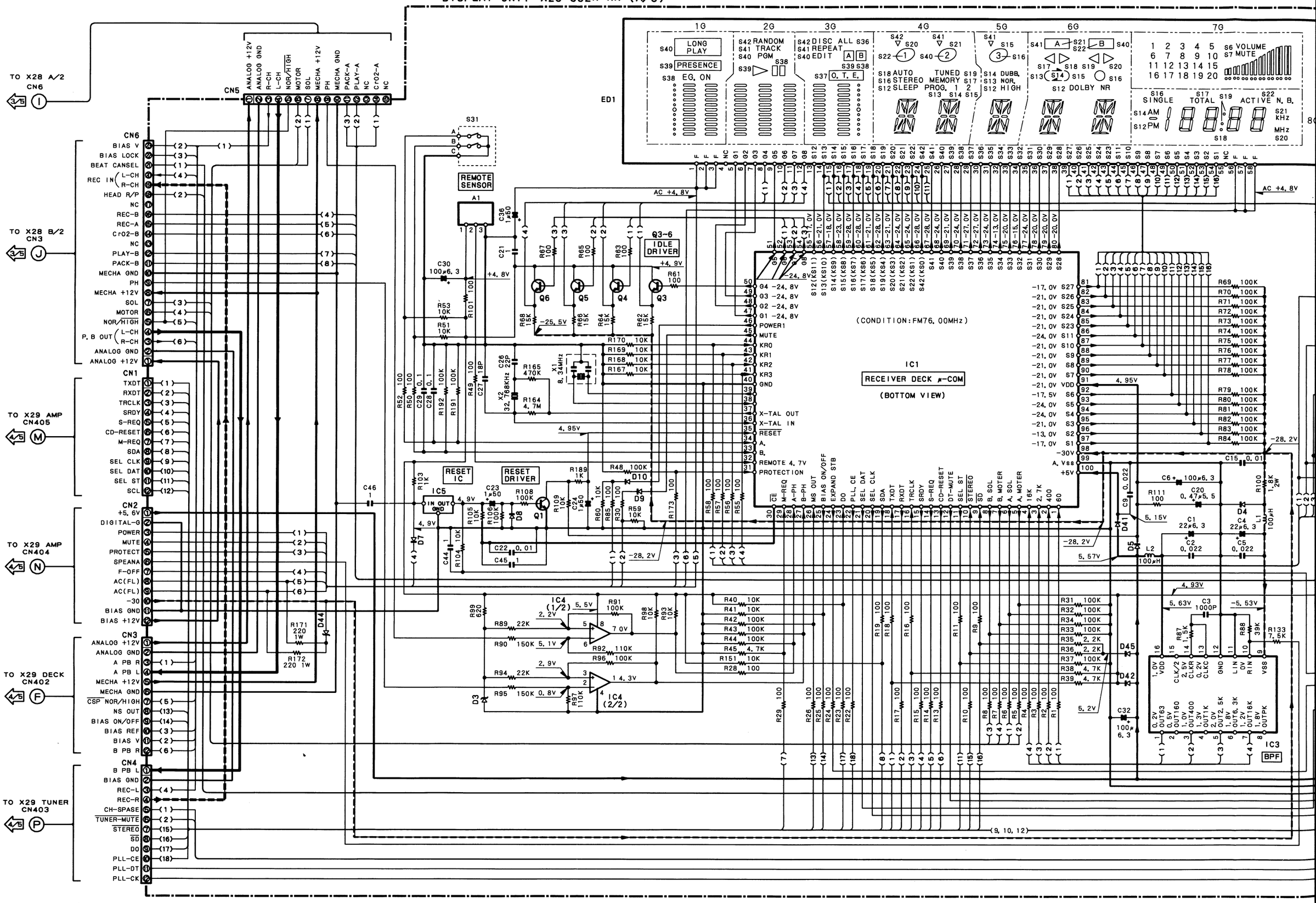

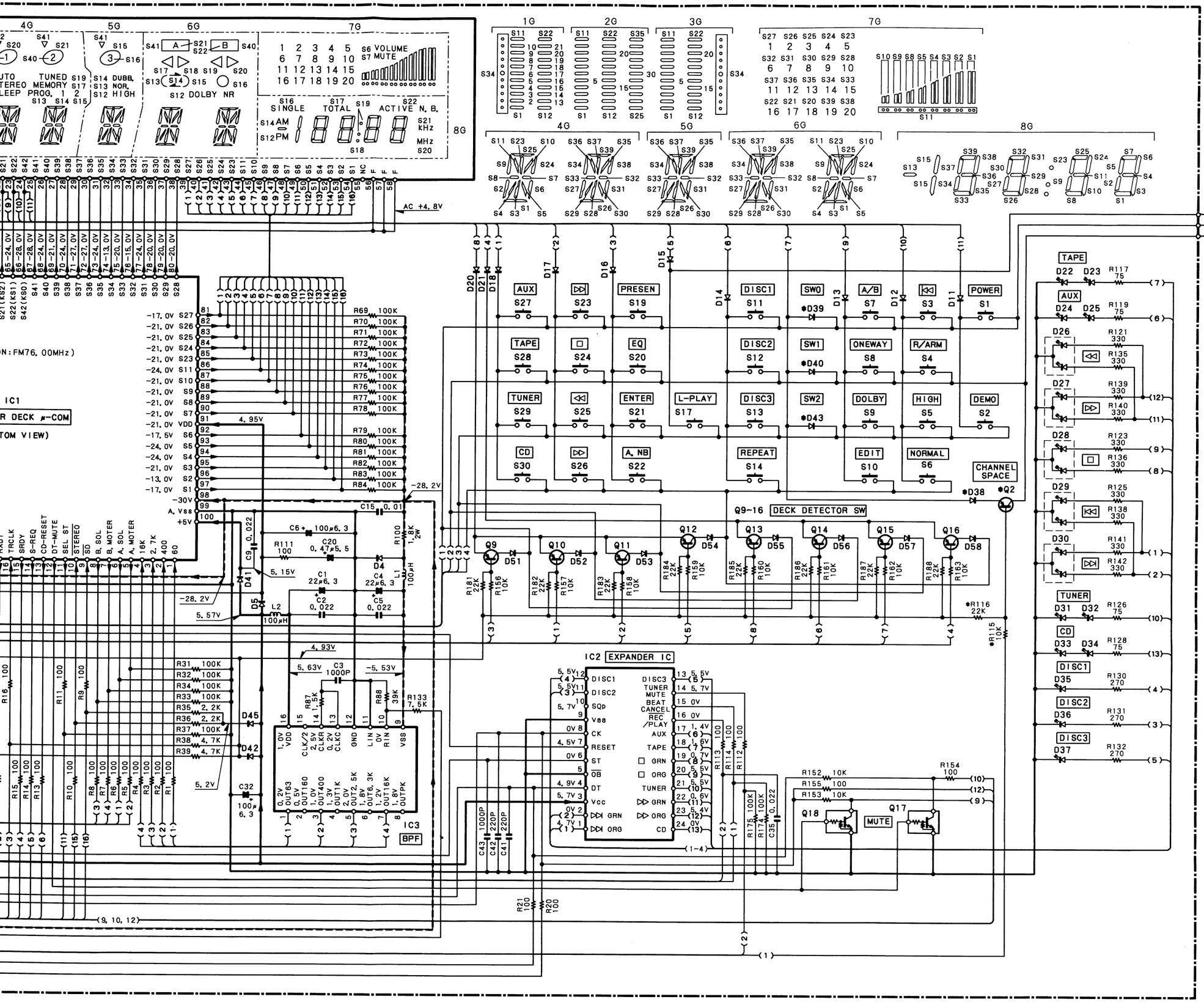

RXD-C3 (5/5) (K)

2SA1534A 2SC18
2SA954 2SC28
2SA992 2SC32

DTA124ES
DTC124ES
2SA933S
2SC1740S

2SD2012

TA8125S-G
TA8409S

NJU7313A

MN66271

S-80740A

AN8806SB

X25-(A/3)

IC1	:M38197MA-077FP
IC2	:M66310FP
IC3	:XR-1091FCP
IC4	:BA10393F
IC5	:S-80740AL
Q1, 3~6	:2SC2412K
Q2, 9~16	:2SA1037K
Q17, 18	:DTC124EU
D3	:HZS2. 7N(B2) or RD2. 7ES(B2)
D4, 44	:HZS5. 6N(B2) or RD5. 6ES(B2)
D5, 7, 9~21, 42	:1SS131 or HSS104A
D8, 38~41, 43 45, 51~58	:MA111
D22~25, 31~37	:B30-2462-05
D26~30	:B30-2463-05
ED1	:FIP8QMW5R

X25-522X-XX (A/3)

UNIT	Ref. NO / ABB	R115 116	Q2	D38	D39	D40	D43
0-11	K, R, P	NO	NO	NO	NO	NO	NO
0-21	Y, M, I	YES	YES	YES	YES		
2-71	T, E, G	NO	NO	NO	NO		YES
0-71	X				YES	YES	NO

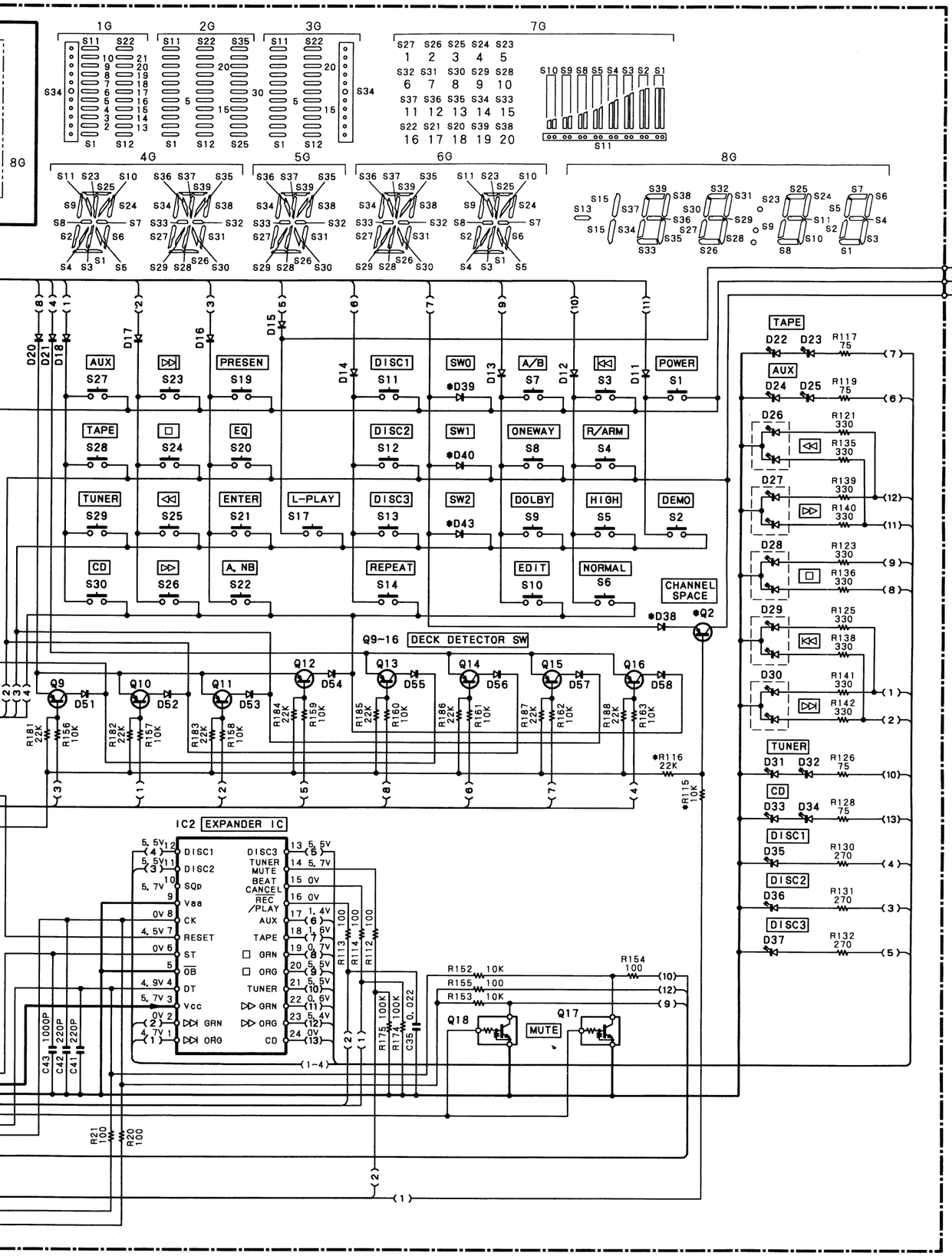

X25-(A/3)

IC1	:M38197MA-077FP
IC2	:M66310FP
IC3	:XR-1091FCP
IC4	:BA10393F
IC5	:S-80740AL
Q1, 3-6	:2SC2412K
Q2, 9-16	:2SA1037K
Q17, 18	:DTC124EU
D3	:HZS2, 7N(B2) or RD2, 7ES(B2)
D4, 44	:HZS5, 6N(B2) or RD5, 6ES(B2)
D5, 7, 9~21, 42	:1SS131 or HSS104A
D8, 38~41, 43 45, 51~58	:MA111
D22~25, 31~37	:B30-2462-05
D26~30	:B30-2463-05
ED1	:FIP8QMW5R

X25-522X-XX (A/3)

UNIT	Ref. NO / ABB	R115 116	Q2	D38	D39	D40	D43
0-11	K, R, P	NO	NO	NO	NO	NO	NO
0-21	Y, M, I	YES	YES	YES	YES		
2-71	T, E, G	NO	NO	NO	NO		YES
0-71	X				YES	YES	NO

SIGNAL LINE
GND LINE
+B LINE
-B LINE

RXD-C3 (5/5) (K)

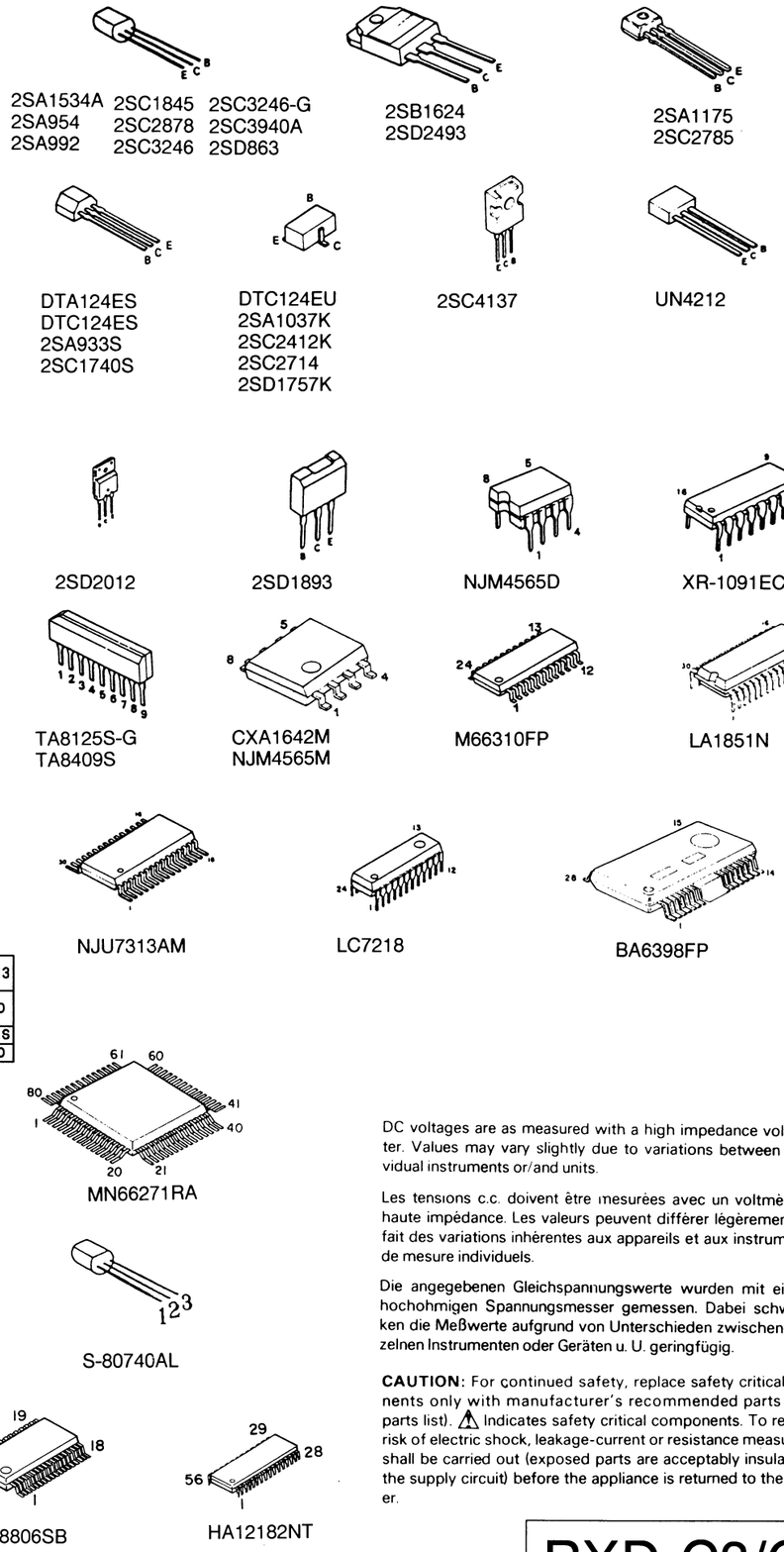

DC voltages are as measured with a high impedance voltmeter. Values may vary slightly due to variations between individual instruments or/and units.

Les tensions c.c. doivent être mesurées avec un voltmètre à haute impédance. Les valeurs peuvent différer légèrement du fait des variations inhérentes aux appareils et aux instruments de mesure individuels.

Die angegebenen Gleichspannungswerte wurden mit einem hochohmigen Spannungsmesser gemessen. Dabei schwanken die Meßwerte aufgrund von Unterschieden zwischen einzelnen Instrumenten oder Geräten u. U. geringfügig.

CAUTION: For continued safety, replace safety critical components only with manufacturer's recommended parts (refer to parts list). ⚠ Indicates safety critical components. To reduce the risk of electric shock, leakage-current or resistance measurements shall be carried out (exposed parts are acceptably insulated from the supply circuit) before the appliance is returned to the customer.

RXD-C3/C3L

KENWOOD

Y39-2030-11

EXPLODED VIEW(CD MECHANISM)

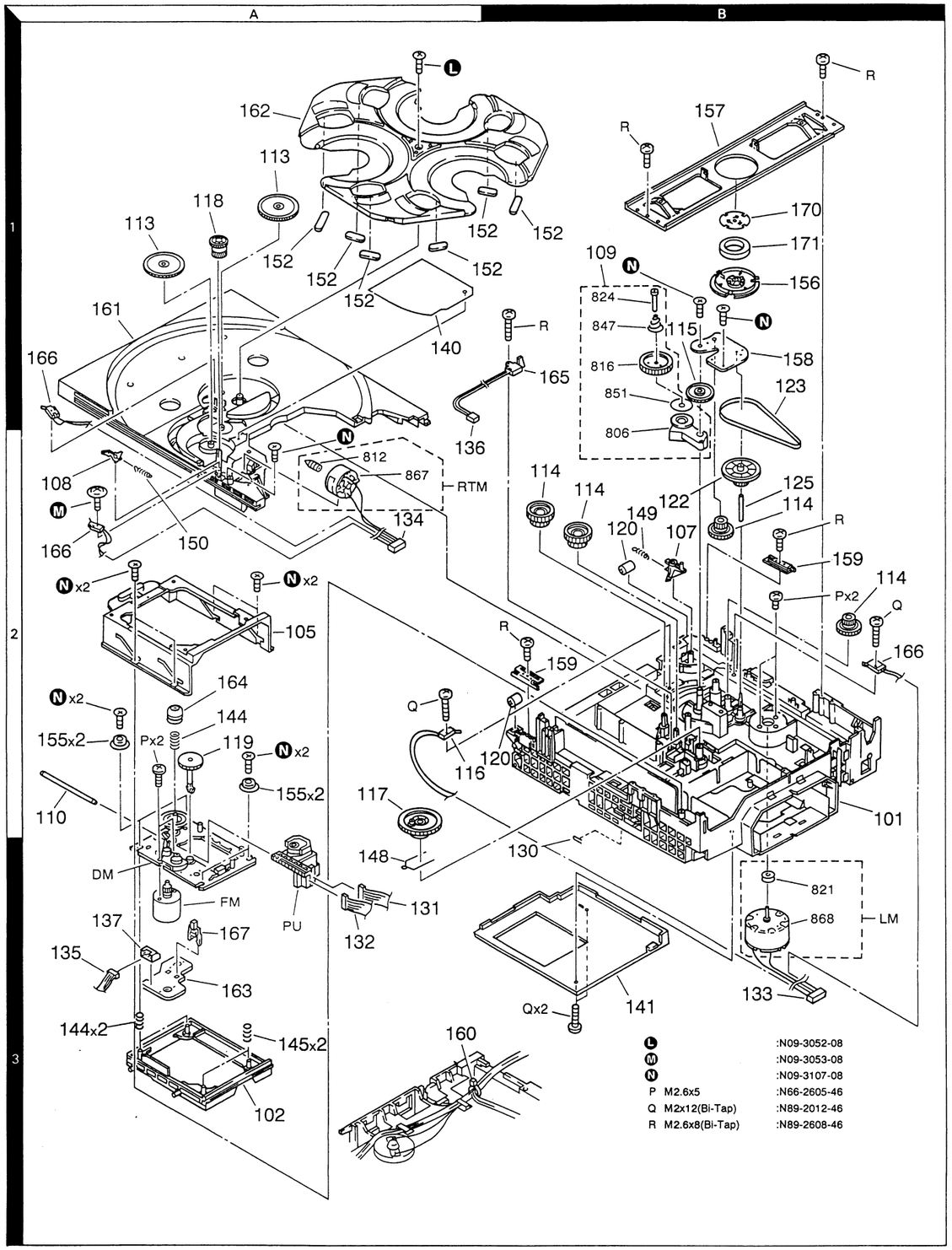

Parts with the exploded numbers larger than 700 are not supplied.

EXPLODED VIEW(CASSETTE DECK MECHANISM)

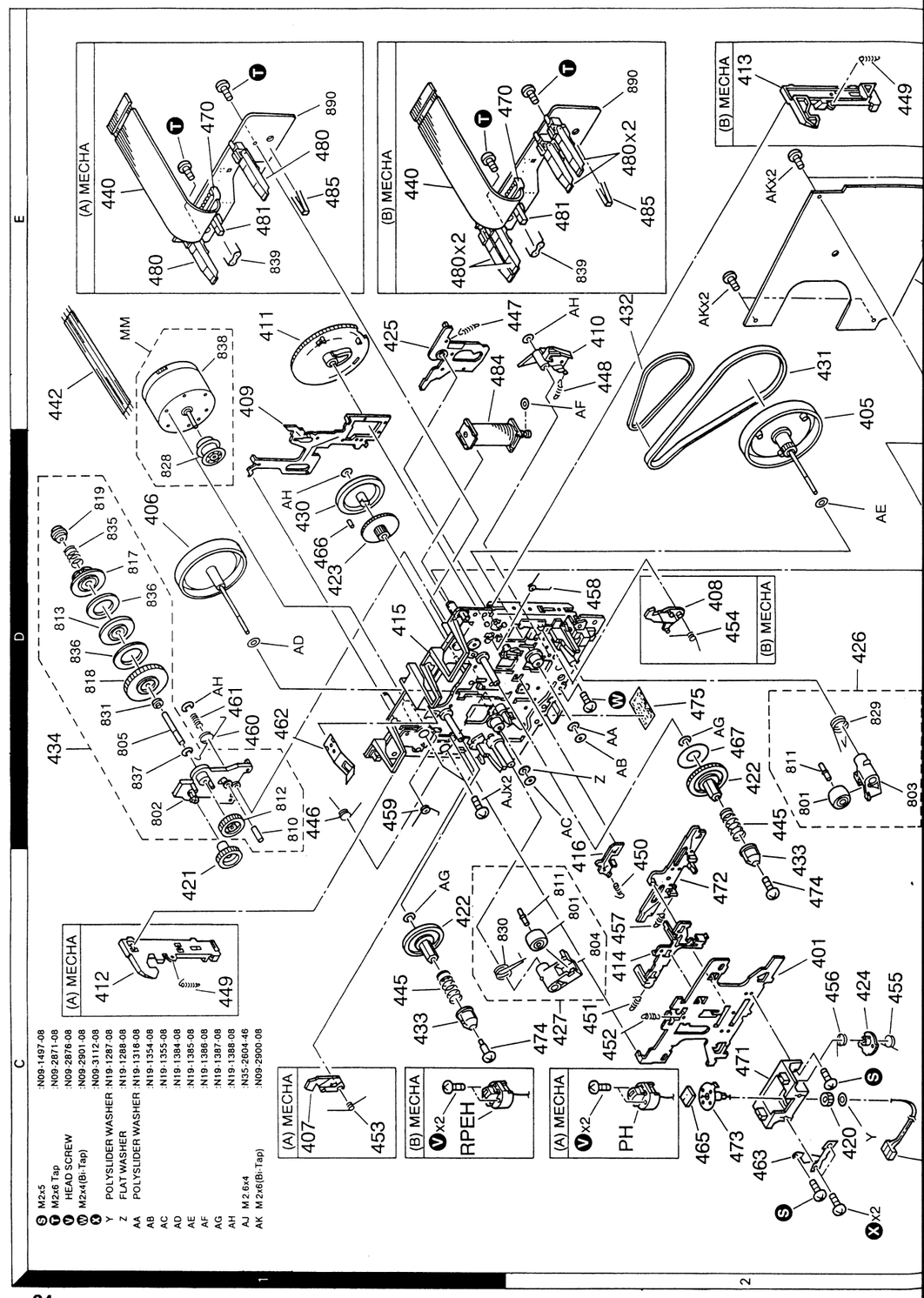

Parts with the exploded numbers larger than 700 are not s

EXPLODED VIEW(CASSETTE DECK MECHANISM)

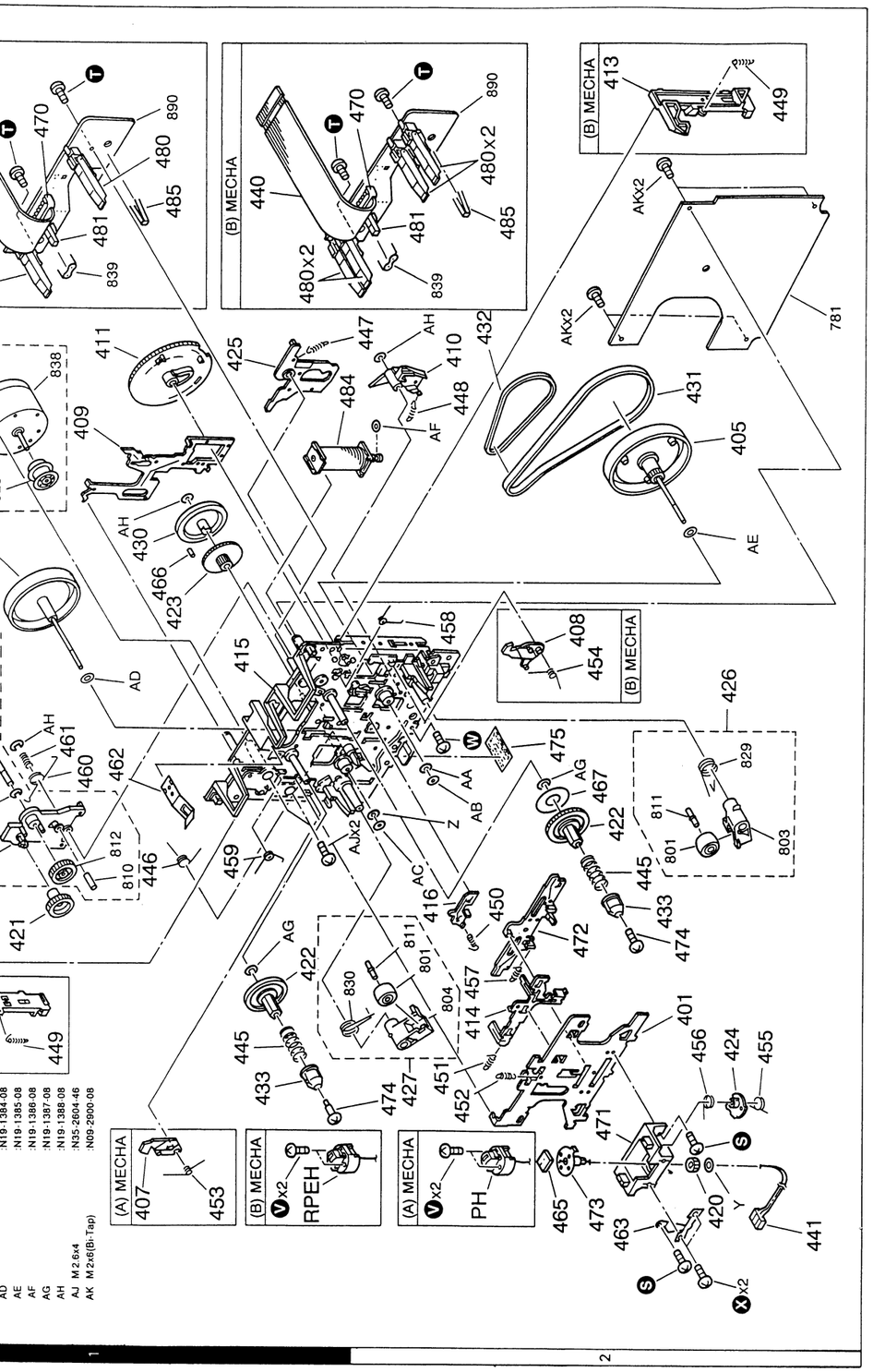

Parts with the exploded numbers larger than 700 are not supplied.

EXPLODED VIEW(UNIT)

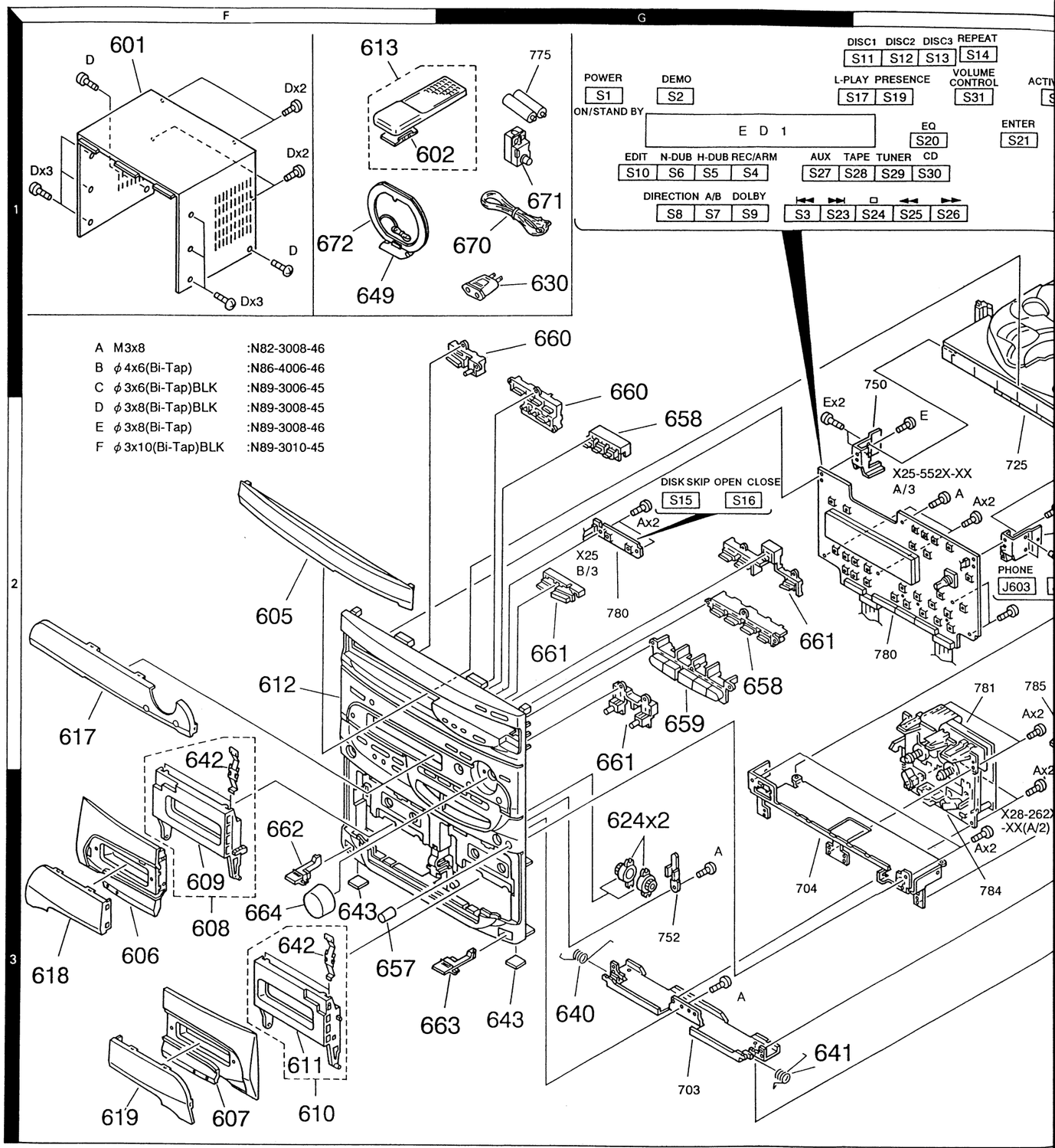

 RXD-C3/C3L

EXPLODED VIEW(UNIT)

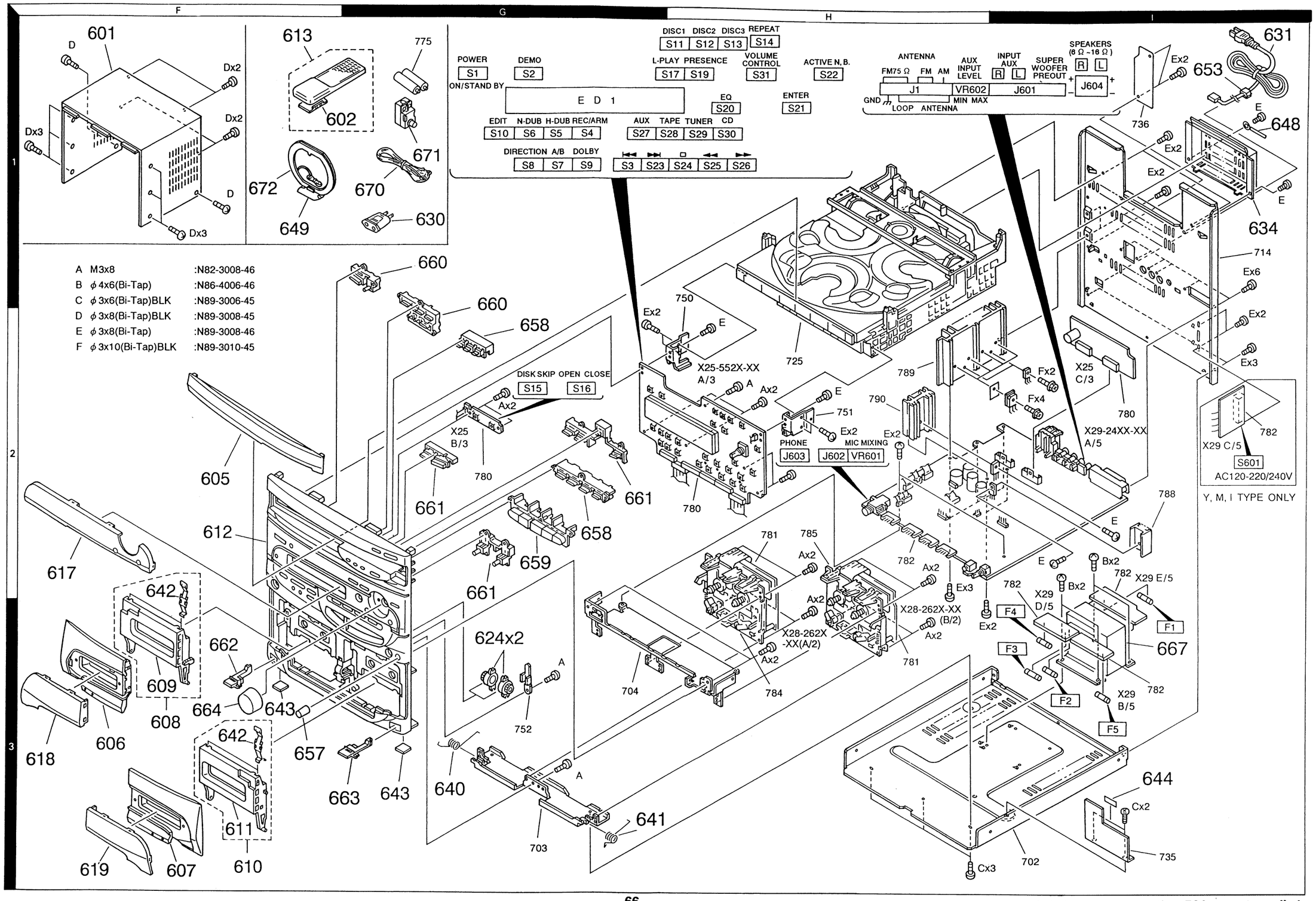

Parts with the exploded numbers larger than 700 are not supplied.

PARTS LIST

RXD-C3/C3L

DISTINATION	DISPLAY UNIT	RECORD/PLAYBACK UNIT	MAIN UNIT-TUNER (T,E,G TYPE)	MAIN UNIT-TUNER (K,P,R,Y,M,X TYPE)
SINGAPORE MADE				
K	X25-5520-11	X28-2620-00	—	X29-2490-11
R	X25-5520-11	X28-2620-00	—	X29-2490-11
P	X25-5520-11	X28-2620-00	—	X29-2490-11
Y	X25-5520-21	X28-2620-00	—	X29-2490-21
M	X25-5520-21	X28-2620-00	—	X29-2490-21
X	X25-5520-71	X28-2620-00	—	X29-2490-71
T	X25-5520-71	X28-2620-00	X29-2482-70	—
E	X25-5520-71	X28-2620-00	X29-2482-70	—
G	X25-5520-71	X28-2620-00	X29-2482-70	—
MALAYSIA MADE				
K	X25-5520-11	X28-2620-00	—	X29-2490-11
R	X25-5520-11	X28-2620-00	—	X29-2490-11
P	X25-5520-11	X28-2620-00	—	X29-2490-11
Y	X25-5520-21	X28-2620-00	—	X29-2490-21
M	X25-5520-21	X28-2620-00	—	X29-2490-21
X	X25-5520-71	X28-2620-00	—	X29-2490-71
T	X25-5520-71	X28-2620-00	X29-2482-70	—
E	X25-5520-71	X28-2620-00	X29-2482-70	—
G	X25-5520-71	X28-2620-00	X29-2482-70	—
I	X25-5520-21	X28-2620-00	—	X29-2490-21

* New Parts
Parts without Parts No. are not supplied.
Les articles non mentionnes dans le Parts No. ne sont pas fournis.
Teile ohne Parts No. werden nicht geliefert.

No.1

Ref. No. 参照番号	Address 位置	New Parts 新	Parts No. 部品番号	Description 部品名／規格	Destination 仕向	Remarks 備考
RXD-C3/C3L						
601	1F	*	A01-3115-21	METALLIC CABINET		
602	1F		A09-0170-08	BATTERY COVER		
605	2F	*	A29-0367-12	PANEL (CD TRAY)		
606	3F	*	A53-1466-02	CASSETTE LID		A
607	3F	*	A53-1467-02	CASSETTE LID		B
608	3F	*	A53-1468-03	CASSETTE HOLDER ASSY		A
609	3F	*	A53-1469-02	CASSETTE HOLDER		A
610	3F	*	A53-1470-03	CASSETTE HOLDER ASSY		B
611	3F	*	A53-1471-02	CASSETTE HOLDER		B
612	2F	*	A60-0553-21	PANEL	KRPYMI	
612	2F	*	A60-0553-21	PANEL	X	
612	2F	*	A60-0572-21	PANEL	TEG	
613	1F	*	A70-0978-05	REMOTE CONTROLLER ASSY		
617	2F	*	B10-2012-13	FRONT GLASS		
618	3F	*	B10-2013-03	FRONT GLASS		A
619	3F	*	B10-2014-03	FRONT GLASS		B
-			B46-0094-03	WARRANTY CARD	Y	
-			B46-0095-03	WARRANTY CARD	Y	
-			B46-0096-43	WARRANTY CARD	X	
-			B46-0121-33	WARRANTY CARD	P	
-			B46-0307-13	WARRANTY CARD	K	
-			B46-0310-03	WARRANTY CARD	TEG	
-		*	B58-0964-03	CAUTION CARD	KRY	
-		*	B58-0965-03	CAUTION CARD	PXT	
-		*	B58-0966-03	CAUTION CARD	MIE	
-		*	B58-0968-04	CAUTION CARD	Y	
-		*	B58-0970-03	CAUTION CARD (R TYPE)	RG	
-		*	B60-1543-00	INSTRUCTION MANUAL(ENGLISH)	KRPYMI	
-		*	B60-1543-00	INSTRUCTION MANUAL(ENGLISH)	XTE	
-		*	B60-1544-00	INSTRUCTION MANUAL(FRENCH)	PE	
-		*	B60-1545-00	INSTRUCTION MANUAL(GERMAN)	EG	
-		*	B60-1546-00	INSTRUCTION MANUAL(DUTCH)	E	
-		*	B60-1547-00	INSTRUCTION MANUAL(ITALIAN)	E	
-		*	B60-1548-00	INSTRUCTION MANUAL(SPANISH)	RME	
-		*	B60-1549-00	INSTRUCTION MANUAL(CHINESE)	MI	
624	3G	*	D39-0316-05	DAMPER		
⚠ 630	1G		E03-0115-05	AC PLUG ADAPTER	MI	
⚠ 631	1I		E30-2592-15	AC POWER CORD	MIEG	
⚠ 631	1I		E30-2605-05	AC POWER CORD	Y	
⚠ 631	1I		E30-2650-05	AC POWER CORD	KRP	
⚠ 631	1I		E30-2717-05	AC POWER CORD	X	
⚠ 631	1I		E30-2721-05	AC POWER CORD	T	
632	2G	*	E35-0886-05	WIRING HARNESS		A
633	2H	*	E35-0887-05	WIRING HARNESS		B
634	1I	*	F07-0737-03	COVER		
640	3G	*	G01-3652-24	TORSION COIL SPRING		
641	3G	*	G01-3653-24	TORSION COIL SPRING		
642	3F	*	G02-1040-04	FLAT SPRING		
643	3F	*	G11-2200-04	CUSHION		
644	3I		G10-0173-04	NON-WOVEN FABRIC		

L:Scandinavia K:USA P:Canada R:Mexico S : SINGAPORE MADE A : A DECK
Y:PX(Far East, Hawaii) T:England E:Europe G:Germany W : MALAYSIA MADE B : B DECK
Y:AAFES(Europe) X:Australia M, I:Other Areas ⚠ indicates safety critical components.

RXD-C3/C3L

PARTS LIST

* New Parts
Parts without Parts No. are not supplied.
Les articles non mentionnes dans le Parts No. ne sont pas fournis.
Teile ohne Parts No. werden nicht geliefert.

No.2

Ref. No. 参照番号	Address 位置	New Parts 新	Parts No. 部品番号	Description 部品名／規格	Destination 仕向	Remarks 備考
-		*	H10-5724-12	POLYSTYRENE FOAMED FIXTURE		S
-		*	H10-5725-22	POLYSTYRENE FOAMED FIXTURE		S
-		*	H10-5818-12	POLYSTYRENE FOAMED FIXTURE		W
-		*	H10-5819-22	POLYSTYRENE FOAMED FIXTURE		W
-			H13-0086-04	CARTON BOARD		
-			H21-0305-04	PROTECTION SHEET		
-			H25-0632-24	PROTECTION BAG	KRPYMI	
-			H25-0632-24	PROTECTION BAG	XEG	
-			H25-0644-04	PROTECTION BAG	T	
-			H25-1509-04	PROTECTION BAG	MI	
-		*	H25-1536-04	PROTECTION BAG	KRPYXT	
-		*	H25-1536-04	PROTECTION BAG	EG	
-		*	H50-0993-04	ITEM CARTON CASE	KRPYX	S
-		*	H50-0994-04	ITEM CARTON CASE	M	S
-		*	H50-0995-14	ITEM CARTON CASE	TEG	S
-		*	H50-1139-04	ITEM CARTON CASE	KRPYX	W
-		*	H50-1140-04	ITEM CARTON CASE	M	W
-		*	H50-1141-14	ITEM CARTON CASE	I	W
-		*	H50-1142-14	ITEM CARTON CASE	TEG	W
648	1I		J19-2808-05	HOLDER	MI	
649	1F		J19-3645-05	ANTENNA STAND		
⚠ 653	1I		J42-0083-05	POWER CORD BUSHING		
657	3F		K29-5810-04	KNOB (MIC)		
658	2G	*	K29-5870-03	KNOB (INPUT&DIS)		
659	2G	*	K29-5871-13	KNOB		
660	1G	*	K29-5872-03	KNOB		
661	2G	*	K29-5873-22	KNOB		
662	3F	*	K29-5874-24	KNOB (EJECT)(L)		
663	3F	*	K29-5875-24	KNOB (EJECT)(R)		
664	3F	*	K29-5903-24	KNOB (VOL)		
⚠ 667	3I	*	L07-0891-15	POWER TRANSFORMER	KRP	
⚠ 667	3I	*	L07-0892-15	POWER TRANSFORMER	YMI	
⚠ 667	3I	*	L07-0893-15	POWER TRANSFORMER	XT	
⚠ 667	3I	*	L07-0894-15	POWER TRANSFORMER	EG	
670	1G		T90-0175-05	T TYPE ANTENNA		
671	1G		T90-0185-05	ANTENNA ADAPTOR	TEG	
672	1F		T90-0195-05	LOOP ANTENNA		
DISPLAY UNIT(X25-552X-XX)						
D22 -25		*	B30-2462-05	LED(GRN)		
D26 -30		*	B30-2463-05	LED(TWIN VRPG 561)		
D31 -37		*	B30-2462-05	LED(GRN)		
C1			C90-3210-05	ELECTRO 22UF 6.3WV		
C2			CK73FB1H223K	CHIP C 0.022UF K		
C3			CC73FSL1H102J	CHIP C 1000PF J		
C4			C90-3210-05	ELECTRO 22UF 6.3WV		
C5			CK73FB1H223K	CHIP C 0.022UF K		
C6			C90-3214-05	ELECTRO 100UF 6.3WV		
C9			CK73FB1H223K	CHIP C 0.022UF K		
C15			CK73FB1H103K	CHIP C 0.010UF K		
C20			C90-1827-05	BACKUP 0.047F 5.5WV		
C21			CK73FF1C105Z	CHIP C 1.0UF Z		
C22			CK73FB1H103K	CHIP C 0.010UF K		
C23 ,24			C90-3253-05	ELECTRO 1UF 50WV		

L:Scandinavia K:USA P:Canada R:Mexico S : SINGAPORE MADE A : A DECK
Y:PX(Far East, Hawaii) T:England E:Europe G:Germany W : MALAYSIA MADE B : B DECK
Y:AAFES(Europe) X:Australia M, I:Other Areas ⚠ indicates safety critical components.

* New Parts
Parts without Parts No. are not supplied.
Les articles non mentionnes dans le Parts No. ne sont pas fournis.
Teile ohne Parts No. werden nicht geliefert.

No.3

Ref. No. 参照番号	Address 位置	New Parts 新	Parts No. 部品番号	Description 部品名／規格	Destination 仕向	Remarks 備考
C26			CC73FCH1H220J	CHIP C 22PF J		
C27			CC73FCH1H180J	CHIP C 18PF J		
C28 ,29			CK73FB1E104K	CHIP C 0.10UF K		
C30			C90-3214-05	ELECTRO 100UF 6.3WV		
C32			C90-3214-05	ELECTRO 100UF 6.3WV		
C35			CK73FB1H223K	CHIP C 0.022UF K		
C36			C90-3253-05	ELECTRO 1UF 50WV		
C41 ,42			CC73FCH1H221J	CHIP C 220PF J		
C43			CK73FB1H102K	CHIP C 1000PF K		
C44 -46			CK73FF1C105Z	CHIP C 1.0UF Z		
C201,202			CE04LW1HR47M	ELECTRO 0.47UF 50WV		
C203,204			CE04LW1V100M	ELECTRO 10UF 35WV		
C205,206			CE04LW1HR22M	ELECTRO 0.22UF 50WV		
C207,208			CE04LW1H2R2M	ELECTRO 2.2UF 50WV		
C209,210			CF92FV1H105J	MF 1.0UF J		
C211,212			CF92FV1H333J	MF 0.033UF J		
C213,214			CF92FV1H104J	MF 0.10UF J		
C215,216			CC45FSL1H101J	CERAMIC 100PF J	TEG	
C217,218			CC73FSL1H681J	CHIP C 680PF J		
C219,220			CC45FSL1H470J	CERAMIC 47PF J		
C221,222			CE04LW1A331M	ELECTRO 330UF 10WV		
C223,224			CK45FB1H152K	CERAMIC 1500PF K	TEG	
C251			CK73FB1E823K	CHIP C 0.082UF K		
C252			CC73FSL1H681J	CHIP C 680PF J		
C253,254			CE04LW1V220M	ELECTRO 22UF 35WV		
C255,256			CK73FF1C105Z	CHIP C 1.0UF Z		
C257			CK73FB1E104K	CHIP C 0.10UF K		
C258			CK73FB1H222K	CHIP C 2200PF K		
C259,260			CK73FB1H223K	CHIP C 0.022UF K		
C261			CK73FB1H102K	CHIP C 1000PF K		
C262			CK73FB1H682K	CHIP C 6800PF K		
C263			CK73FB1E563K	CHIP C 0.056UF K		
C264			CK73FB1H682K	CHIP C 6800PF K		
C265			CK73FB1E563K	CHIP C 0.056UF K		
C266			CE04LW1V470M	ELECTRO 47UF 35WV		
C267			CE04LW1C101M	ELECTRO 100UF 16WV		
C268			CE04LW1H471M	ELECTRO 470UF 50WV		
C269,270			CC73FCH1H221J	CHIP C 220PF J		
C271-274			CK73FF1C105Z	CHIP C 1.0UF Z		
CN5		*	E40-4725-05	FLAT CABLE CONNCTOR		
CN6		*	E40-4729-05	FLAT CABLE CONNCTOR		
L1 ,2			L40-1011-17	SMALL FIXED INDUCTOR(100UH,K)		
X1			L78-0605-05	RESONATOR (8.38MHZ)		
X2			L77-2111-05	CRYSTAL RESONATOR(32.768KHZ)		
R100			RS14KB3D182J	FL-PROOF RS 1.8K J 2W		
R171,172			RS14KB3A221J	FL-PROOF RS 220 J 1W		
R254			RD14NB2E150J	RD 15 J 1/4W		
R257			RD14NB2E101J	RD 100 J 1/4W		
W210			R92-0670-05	CHIP R 0 OHM		
S1 -17	1G,1H		S40-1064-05	PUSH SWITCH		
S19 -30	1G,1H		S40-1064-05	PUSH SWITCH		
S31	1H		T99-0548-05	SPEED DETECTOR		

L:Scandinavia K:USA P:Canada R:Mexico S : SINGAPORE MADE A : A DECK
Y:PX(Far East, Hawaii) T:England E:Europe G:Germany W : MALAYSIA MADE B : B DECK
Y:AAFES(Europe) X:Australia M, I:Other Areas ⚠ indicates safety critical components.

* New Parts
Parts without Parts No. are not supplied.
Les articles non mentionnes dans le Parts No. ne sont pas fournis.
Teile ohne Parts No. werden nicht geliefert.

No.4

Ref. No. 参照番号	Address 位置	New Parts 新	Parts No. 部品番号	Description 部品名／規格	Destination 仕向	Remarks 備考
D3			HZS2.7N(B2)	ZENER DIODE		
D3			RD2.7ES(B2)	ZENER DIODE		
D4			HZS5.6N(B2)	ZENER DIODE		
D4			RD5.6ES(B2)	ZENER DIODE		
D5			HSS104A	DIODE		
D5			1SS131	DIODE		
D7			HSS104A	DIODE		
D7			1SS131	DIODE		
D8		*	MA111	DIODE		
D9 -18			HSS104A	DIODE		
D9 -18			1SS131	DIODE		
D20 ,21			HSS104A	DIODE		
D20 ,21			1SS131	DIODE		
D38 ,39		*	MA111	DIODE	YM	
D39 -41		*	MA111	DIODE	X	
D41		*	MA111	DIODE	KRPYMT	
D41		*	MA111	DIODE	EG	
D42			HSS104A	DIODE		
D42			1SS131	DIODE		
D43		*	MA111	DIODE	TEG	
D44			HZS5.6N(B2)	ZENER DIODE		
D44			RD5.6ES(B2)	ZENER DIODE		
D45		*	MA111	DIODE		
D51 -58		*	MA111	DIODE		
ED1		*	FIP8QMW5R	INDICATOR TUBE		
IC1		*	M38197MA-077FP	MOS-IC		
IC2		*	M66310FP	MOS-IC		
IC3			XR-1091ECP	IC(GE FILTER)		
IC4		*	BA10393F	IC		
IC5			S-80740AL	IC(VOLTAGE DETECTOR)		
IC201		*	UPC1853CT-02	ANALOG IC		
IC202			NJM4565M	IC(OP AMP X2)		
Q1			2SC2412K	TRANSISTOR		
Q2			2SA1037K	TRANSISTOR	YM	
Q3 -6			2SC2412K	TRANSISTOR		
Q9 -16			2SA1037K	TRANSISTOR		
Q17 ,18			DTC124EU	DIGITAL TRANSISTOR		
Q201,202			2SC2878(B)	TRANSISTOR		
Q203-206			2SC1845(F,E)	TRANSISTOR		
Q207,208			2SA992(F,E)	TRANSISTOR		
A1			W02-1046-05	ELECTRIC CIRCUIT MODULE		
A1			W02-1174-05	ELECTRIC CIRCUIT MODULE		
RECORD/PLAYBACK UNIT(X28-2620-00)						
C1 ,2			CK45FB1H471K	CERAMIC 470PF K		
C5 ,6			CE04LW1H2R2M	ELECTRO 2.2UF 50WV		
C7 ,8			CK45FB1H391K	CERAMIC 390PF K		
C9 ,10			CQ92FM1H223J	MYLAR 0.022UF J		
C11 ,12			CE04LW1C470M	ELECTRO 47UF 16WV		
C13			CE04LW1C101M	ELECTRO 100UF 16WV		
C14		*	CQ93HP2A822J-G	MYLAR 8200PF J		
C15 -18			CC45FSL1H221J	CERAMIC 220PF J		
C19		*	CK45FB2H471K-G	CERAMIC 470PF K		
C20			CE04LW1V4R7M	ELECTRO 4.7UF 35WV		
C21 ,22			CK45FB1H332K	CERAMIC 3300PF K		

L:Scandinavia K:USA P:Canada R:Mexico S : SINGAPORE MADE A : A DECK
Y:PX(Far East, Hawaii) T:England E:Europe G:Germany W : MALAYSIA MADE B : B DECK
Y:AAFES(Europe) X:Australia M, I:Other Areas ⚠ indicates safety critical components.

* New Parts
Parts without Parts No. are not supplied.
Les articles non mentionnes dans le Parts No. ne sont pas fournis.
Teile ohne Parts No. werden nicht geliefert.

No.5

Ref. No. 参照番号	Address 位置	New Parts 新	Parts No. 部品番号	Description 部品名／規格	Destination 仕向	Remarks 備考
C23			CK45FF1H103Z	CERAMIC 0.010UF Z		
C24			CK45FB1H102K	CERAMIC 1000PF K		
C51 ,52			CC45FSL1H221J	CERAMIC 220PF J		
C53 ,54			CK45FB1H471K	CERAMIC 470PF K		
C55 ,56			CE04LW1H010M	ELECTRO 1.0UF 50WV		
C57 ,58			CK45FB1H391K	CERAMIC 390PF K		
C59 ,60			CE04LW1C470M	ELECTRO 47UF 16WV		
C61 ,62			CQ92FM1H153J	MYLAR 0.015UF J		
C63			CE04LW1C101M	ELECTRO 100UF 16WV		
C64			CK45FB1H102K	CERAMIC 1000PF K		
CN3			E40-4163-05	FLAT CABLE CONNCTOR		
CN6			E40-4155-05	FLAT CABLE CONNCTOR		
J1 ,2			J11-0098-05	WIRE CLAMPER		
L1 ,2			L40-1035-20	SMALL FIXED INDUCTOR(10MH,J)		
L3			L32-0542-05	BIAS OSCILATING COIL		
VR1			R12-3685-05	TRIMMING POT.(10K ｱﾋﾞ)		
VR2			R12-3686-05	TRIMMING POT.(22K ｱﾋﾞ)		
VR3 ,4			R12-0605-05	TRIMMING POT.(220 ｱﾋﾞ)		
VR5 ,6		*	R12-5086-05-G	TRIMMING POT.(100K ｱﾋﾞ)		
VR7			R12-3685-05	TRIMMING POT.(10K ｱﾋﾞ)		
VR8			R12-3686-05	TRIMMING POT.(22K ｱﾋﾞ)		
VR9 ,10			R12-0606-05	TRIMMING POT.(330 ｱﾋﾞ)		
K1			S51-2089-05	MAGNETIC RELAY		
K1		*	S76-0018-05-G	MAGNETIC RELAY		
D7 -9			HSS104	DIODE		
D7 -9			1SS133	DIODE		
D54 ,55			HSS104	DIODE		
D54 ,55			1SS133	DIODE		
IC1 ,2		*	TA8125S-G	IC(2CH PRE AMP)		
Q1 ,2		*	2SC3246-G	TRANSISTOR		
Q3 ,4			2SC1845(F,E)	TRANSISTOR		
Q5			2SA992(F,E)	TRANSISTOR		
Q6			2SA1175(F,E)	TRANSISTOR		
Q6			2SA933S(Q,R)	TRANSISTOR		
Q7			2SC1740S(Q,R)	TRANSISTOR		
Q7			2SC2785(F,E)	TRANSISTOR		
Q8			DTC124ES	DIGITAL TRANSISTOR		
Q8			UN4212	TRANSISTOR		
Q9 -12			2SC1740S(Q,R)	TRANSISTOR		
Q9 -12			2SC2785(F,E)	TRANSISTOR		
Q13 ,14		*	2SC3246-G	TRANSISTOR		
Q15			2SA1175(F,E)	TRANSISTOR		
Q15			2SA933S(Q,R)	TRANSISTOR		
Q16			2SC1740S(Q,R)	TRANSISTOR		
Q16			2SC2785(F,E)	TRANSISTOR		
Q17 -19			DTC124ES	DIGITAL TRANSISTOR		
Q17 -19			UN4212	TRANSISTOR		
MAIN UNIT-TUNER(X29-2482-70) : E, T, G TYPE						
C1 ,2			CK73FB1H103K	CHIP C 0.010UF K		
C4			CE04LW1C470M	ELECTRO 47UF 16WV		
C5			CK73FB1H223K	CHIP C 0.022UF K		
C6			CK73FB1E473K	CHIP C 0.047UF K		

L:Scandinavia K:USA P:Canada R:Mexico S : SINGAPORE MADE A : A DECK
Y:PX(Far East, Hawaii) T:England E:Europe G:Germany W : MALAYSIA MADE B : B DECK
Y:AAFES(Europe) X:Australia M, I:Other Areas ⚠ indicates safety critical components.

* New Parts
Parts without Parts No. are not supplied.
Les articles non mentionnes dans le Parts No. ne sont pas fournis.
Teile ohne Parts No. werden nicht geliefert.

No.6

Ref. No. 参照番号	Address 位置	New Parts 新	Parts No. 部品番号	Description 部品名／規格	Destination 仕向	Remarks 備考
C7			CE04LW1H3R3M	ELECTRO 3.3UF 50WV		
C8			CK73FB1H682K	CHIP C 6800PF K		
C9			CK73FB1H103K	CHIP C 0.010UF K		
C10			CC73FCH1H330J	CHIP C 33PF J		
C11			CE04LW1V100M	ELECTRO 10UF 35WV		
C12			CE04LW1H010M	ELECTRO 1.0UF 50WV		
C13			CE04LW1HR33M	ELECTRO 0.33UF 50WV		
C14			CE04LW1H010M	ELECTRO 1.0UF 50WV		
C21 ,22			CK73FB1H682K	CHIP C 6800PF K		
C23			CE04LW1V100M	ELECTRO 10UF 35WV		
C25			CE04LW1V100M	ELECTRO 10UF 35WV		
C27			CE04LW1V100M	ELECTRO 10UF 35WV		
C28			CK73FB1E473K	CHIP C 0.047UF K		
C31			CE04LW1A470M	ELECTRO 47UF 10WV		
C32			CK73FB1H103K	CHIP C 0.010UF K		
C33			CC73FCH1H270J	CHIP C 27PF J		
C34			CC73FCH1H220J	CHIP C 22PF J		
C35 -38			CK73FB1H471K	CHIP C 470PF K		
C39			CE04LW1C470M	ELECTRO 47UF 16WV		
C40			CQ92FM1H223J	MYLAR 0.022UF J		
C41			CE04HW1H2R2M	NP-ELEC 2.2UF 50WV		
C42 ,43			CK73FB1H103K	CHIP C 0.010UF K		
C47 ,48			CE04LW1H0R1M	ELECTRO 0.1UF 50WV		
C50			CK73FB1H103K	CHIP C 0.010UF K		
C51			CE04LW1H010M	ELECTRO 1.0UF 50WV		
C52			CE04LW1C470M	ELECTRO 47UF 16WV		
C57			CC73FCH1H220J	CHIP C 22PF J		
C65			CE04LW1H010M	ELECTRO 1.0UF 50WV		
C66			C91-0769-05	CERAMIC 0.01UF K		
C107			CK73FB1E473K	CHIP C 0.047UF K		
C151			CK73FB1E104K	CHIP C 0.10UF K		
C182			CC73FSL1H150J	CHIP C 15PF J		
J1			E20-0321-05	LOCK TERMINAL BOARD		
J2		*	F10-0921-14	SHIELDING PLATE		
CF1 ,2			L72-0536-05	CERAMIC FILTER		
L1 ,2			L40-1091-17	SMALL FIXED INDUCTOR		
L3			L30-0498-05	FM IFT		
L5			L79-0125-05	LC FILTER		
L7		*	L30-0911-05	AM IFT		
L10			L40-1091-17	SMALL FIXED INDUCTOR		
L103			L39-1325-05	COMBINATION COIL		
L106			L40-1091-17	SMALL FIXED INDUCTOR		
X1			L77-1122-05	CRYSTAL RESONATOR(7.2MHZ)		
X2			L78-0295-05	RESONATOR (456KHZ)		
R11			RD14NB2E470J	RD 47 J 1/4W		
R31			RS14KB3D221J	FL-PROOF RS 220 J 2W		
R42			RD14NB2E101J	RD 100 J 1/4W		
R111			RD14NB2E470J	RD 47 J 1/4W		
VR1			R12-3686-05	TRIMMING POT.(22K ㌢)		
VR2			R12-3685-05	TRIMMING POT.(10K ㌢)		
VR3			R12-1619-05	TRIMMING POT.(4.7K ㌢)		
D3			HZS5.1N(B2)	ZENER DIODE		

L:Scandinavia K:USA P:Canada R:Mexico S : SINGAPORE MADE A : A DECK
Y:PX(Far East, Hawaii) T:England E:Europe G:Germany W : MALAYSIA MADE B : B DECK
Y:AAFES(Europe) X:Australia M, I:Other Areas ⚠ indicates safety critical components.

* New Parts
Parts without Parts No. are not supplied.
Les articles non mentionnes dans le Parts No. ne sont pas fournis.
Teile ohne Parts No. werden nicht geliefert.

No.7

Ref. No. 参照番号	Address 位置	New Parts 新	Parts No. 部品番号	Description 部品名／規格	Destination 仕向	Remarks 備考
D3			RD5.1ES(B2)	ZENER DIODE		
D4			HZS3.3N(B2)	ZENER DIODE		
D4			RD3.3ES(B2)	ZENER DIODE		
D5			HSS104	DIODE		
D5			1SS133	DIODE		
D111,112			HSS104	DIODE		
D111,112			1SS133	DIODE		
IC1			LA1851N	IC(AM,FM TUNER)		
IC2			LC7218	IC(PLL SYNTHESIZER)		
Q1			2SC2714(R,O)	TRANSISTOR		
Q2			2SC1845(F,E)	TRANSISTOR		
Q3 ,4			2SC2412K	TRANSISTOR		
Q5			2SA1037K	TRANSISTOR		
Q7			2SC2412K	TRANSISTOR		
Q102,103			2SA1037K	TRANSISTOR		
Q109,110			2SD1757K	TRANSISTOR		
Q111			2SA1037K	TRANSISTOR		
Q113,114			2SC2412K	TRANSISTOR		
Q116			2SC2412K	TRANSISTOR		
A1			W02-1166-15	FM FRONT-END ASSY		
MAIN UNIT-TUNER(X29-249X-XX) : K, P, Y, M, X, R, I TYPE						
C1 ,2			CK73FB1H103K	CHIP C 0.010UF K		
C4			CE04LW1A470M	ELECTRO 47UF 10WV		
C5			CK73FB1H103K	CHIP C 0.010UF K		
C8			CK73FB1H103K	CHIP C 0.010UF K		
C10			CK73FB1H102K	CHIP C 1000PF K		
C11			CE04LW1H4R7M	ELECTRO 4.7UF 50WV		
C13			CE04LW1H010M	ELECTRO 1.0UF 50WV		
C14			CE04LW1H2R2M	ELECTRO 2.2UF 50WV		
C21 ,22			CQ92FM1H163J	MYLAR 0.016UF J	YMX	
C21 ,22			CQ92FM1H243J	MYLAR 0.024UF J	KRP	
C23			CE04LW1H010M	ELECTRO 1.0UF 50WV		
C24			CE04LW1H3R3M	ELECTRO 3.3UF 50WV		
C25			CE04LW1V100M	ELECTRO 10UF 35WV		
C27			CK73FB1E473K	CHIP C 0.047UF K		
C28			CE04LW1V100M	ELECTRO 10UF 35WV		
C31			CE04LW1A470M	ELECTRO 47UF 10WV		
C32			CK73FB1H103K	CHIP C 0.010UF K		
C33			CC73FCH1H270J	CHIP C 27PF J		
C34			CC73FCH1H220J	CHIP C 22PF J		
C35 -38			CK73FB1H471K	CHIP C 470PF K		
C39			CE04LW1C470M	ELECTRO 47UF 16WV		
C40			CK73FB1H223K	CHIP C 0.022UF K		
C41			CE04LW1H010M	ELECTRO 1.0UF 50WV		
C42 ,43			CK73FB1H103K	CHIP C 0.010UF K		
C50			C91-0769-05	CERAMIC 0.01UF K		
C51			CE04LW1H010M	ELECTRO 1.0UF 50WV		
C52			CE04LW1C470M	ELECTRO 47UF 16WV		
C57			CC73FCH1H220J	CHIP C 22PF J		
C61			CK73FB1H103K	CHIP C 0.010UF K		
C62			CE04LW1C101M	ELECTRO 100UF 16WV		
C65			CE04LW1H010M	ELECTRO 1.0UF 50WV		
C66			CK73FB1H103K	CHIP C 0.010UF K		
C71			CE04LW1V100M	ELECTRO 10UF 35WV		

L:Scandinavia K:USA P:Canada R:Mexico S : SINGAPORE MADE A : A DECK
Y:PX(Far East, Hawaii) T:England E:Europe G:Germany W : MALAYSIA MADE B : B DECK
Y:AAFES(Europe) X:Australia M, I:Other Areas ⚠ indicates safety critical components.

* New Parts
Parts without Parts No. are not supplied.
Les articles non mentionnes dans le Parts No. ne sont pas fournis.
Teile ohne Parts No. werden nicht geliefert.

No.8

Ref. No. 参照番号	Address 位置	New Parts 新	Parts No. 部品番号	Description 部品名／規格	Destination 仕向	Remarks 備考
C72			CE04LW1C470M	ELECTRO 47UF 16WV		
C103-106			CE04LW1HR47M	ELECTRO 0.47UF 50WV		
C107			CK73FB1E473K	CHIP C 0.047UF K		
C112			CC73FSL1H101J	CHIP C 100PF J		
C114			CK73FB1H681K	CHIP C 680PF K		
C116			CC73FSL1H101J	CHIP C 100PF J		
C117			CK73FB1H681K	CHIP C 680PF K		
C118			CK73FB1H103K	CHIP C 0.010UF K		
C119			CC73FSL1H101J	CHIP C 100PF J		
C121,122			CE04LW1C470M	ELECTRO 47UF 16WV		
C135,136			CQ92FM1H682J	MYLAR 6800PF J	YM	
C182			CC73FSL1H150J	CHIP C 15PF J		
J1	1H		E20-0476-05	LOCK TERMINAL BOARD(4P)		
J2		*	F10-0945-04	SHIELDING PLATE		
CF1 ,2			L72-0531-05	CERAMIC FILTER		
CF3			L72-0574-05	CERAMIC FILTER		
L7		*	L30-0911-05	AM IFT		
L10			L40-1091-17	SMALL FIXED INDUCTOR		
L11			L40-1021-14	SMALL FIXED INDUCTOR(1.0MH,K)		
L12			L40-1091-17	SMALL FIXED INDUCTOR		
L103			L39-1328-05	COMBINATION COIL		
L106			L40-1091-17	SMALL FIXED INDUCTOR		
X1			L77-1122-05	CRYSTAL RESONATOR(7.2MHZ)		
X2			L78-0295-05	RESONATOR (456KHZ)		
R11			RS14KB3A820J	FL-PROOF RS 82 J 1W		
R31			RS14KB3D221J	FL-PROOF RS 220 J 2W		
R42			RD14NB2E101J	RD 100 J 1/4W		
R111			RD14NB2E470J	RD 47 J 1/4W		
R127,128			RD14NB2E101J	RD 100 J 1/4W		
S101			S62-0034-05	SLIDE SWITCH	YM	
D3			HZS5.1N(B2)	ZENER DIODE		
D3			RD5.1ES(B2)	ZENER DIODE		
D4			HZS3.3N(B2)	ZENER DIODE		
D4			RD3.3ES(B2)	ZENER DIODE		
D7			MA110	DIODE		
D8			HSS104	DIODE		
D8			1SS133	DIODE		
D11			HZS8.2N(B2)	ZENER DIODE		
D11			RD8.2ES(B2)	ZENER DIODE		
D111,112			MA110	DIODE		
IC1		*	LA1831A-KEN	ANALOG IC		
IC2			LC7218	IC(PLL SYNTHESIZER)		
IC12			NJM4565D	IC(OP AMP X2)		
Q1			2SC2714(R,O)	TRANSISTOR		
Q2			2SC1845(F,E)	TRANSISTOR		
Q3			2SC1740S(Q,R)	TRANSISTOR		
Q3			2SC2785(F,E)	TRANSISTOR		
Q7			2SC2412K	TRANSISTOR		
Q11			2SD863(E,F)	TRANSISTOR		
Q102			2SA1037K	TRANSISTOR		
Q104			2SA1037K	TRANSISTOR		
Q107,108			2SC2412K	TRANSISTOR	YM	

L:Scandinavia K:USA P:Canada R:Mexico S : SINGAPORE MADE A : A DECK
Y:PX(Far East, Hawaii) T:England E:Europe G:Germany W : MALAYSIA MADE B : B DECK
Y:AAFES(Europe) X:Australia M, I:Other Areas ⚠ indicates safety critical components.

* New Parts
Parts without Parts No. are not supplied.
Les articles non mentionnes dans le Parts No. ne sont pas fournis.
Teile ohne Parts No. werden nicht geliefert.

No.9

Ref. No. 参照番号	Address 位置	New Parts 新	Parts No. 部品番号	Description 部品名／規格	Destination 仕向	Remarks 備考
Q109,110			2SD1757K	TRANSISTOR		
Q111			2SA1037K	TRANSISTOR		
MAIN UNIT-EXCEPT TUNER(X29-25XX-XX)						
C201			CE04LW1V100M	ELECTRO 10UF 35WV		
C202			CE04LW1A470M	ELECTRO 47UF 10WV		
C203			CC73FCH1H330J	CHIP C 33PF J		
C204			CK73FB1E104K	CHIP C 0.10UF K		
C205			CE04HW1H010M	NP-ELEC 1.0UF 50WV		
C206			CE04LW0J471M	ELECTRO 470UF 6.3WV		
C207			CE04HW1H010M	NP-ELEC 1.0UF 50WV		
C208			CC73FSL1H101J	CHIP C 100PF J		
C209			CK73FB1H273K	CHIP C 0.027UF K		
C210			CK73FB1H681K	CHIP C 680PF K		
C211			CK73FB1H222K	CHIP C 2200PF K		
C212			CK73FB1H331K	CHIP C 330PF K		
C213			CC73FSL1H331J	CHIP C 330PF J		
C214			CE04LW1H010M	ELECTRO 1.0UF 50WV		
C215			CK73FB1E104K	CHIP C 0.10UF K		
C216			CK73FB1H332K	CHIP C 3300PF K		
C217,218			CK73FB1E104K	CHIP C 0.10UF K		
C219			CK73FB1H273K	CHIP C 0.027UF K		
C220			CK73FB1H153K	CHIP C 0.015UF K		
C221,222			CE04LW1A101M	ELECTRO 100UF 10WV		
C223			CK73FB1C224K	CHIP C 0.22UF K		
C224			CK73FB1E104K	CHIP C 0.10UF K		
C225,226			CK73FB1H472K	CHIP C 4700PF K		
C227			CK73FB1H102K	CHIP C 1000PF K		
C228,229			CK73FB1H223K	CHIP C 0.022UF K		
C230,231			CE04HW1HR33M	NP-ELEC 0.33UF 50WV		
C232			CK73FB1E104K	CHIP C 0.10UF K		
C233			CE04LW1A101M	ELECTRO 100UF 10WV		
C234			CK73FB1E104K	CHIP C 0.10UF K		
C235			CE04LW1A101M	ELECTRO 100UF 10WV		
C236			CK73FB1E104K	CHIP C 0.10UF K		
C237			CE04LW1A331M	ELECTRO 330UF 10WV		
C240,241			CC73FSL1H102J	CHIP C 1000PF J		
C242,243			CC73FSL1H151J	CHIP C 150PF J		
C244,245			CE04LW1H2R2M	ELECTRO 2.2UF 50WV		
C246			CE04LW1A470M	ELECTRO 47UF 10WV		
C247			CE04LW0J331M	ELECTRO 330UF 6.3WV		
C248			CE04LW1A101M	ELECTRO 100UF 10WV		
C249			CK73FF1C105Z	CHIP C 1.0UF Z		
C250,251			CK73FB1H103K	CHIP C 0.010UF K		
C253			CK73FB1E104K	CHIP C 0.10UF K		
C254			CK73FF1C105Z	CHIP C 1.0UF Z		
C255-260			CC73FSL1H221J	CHIP C 220PF J		
C261			CE04HW1E100M	NP-ELEC 10UF 25WV		
C262			CE04HW1H010M	NP-ELEC 1.0UF 50WV		
C401,402			CK73FB1H682K	CHIP C 6800PF K		
C403,404			CK73FB1H393K	CHIP C 0.039UF K		
C405,406			CC73FSL1H221J	CHIP C 220PF J		
C407-410			CE04LW1H010M	ELECTRO 1.0UF 50WV		
C411,412			CQ92FM1H333J	MYLAR 0.033UF J		
C413,414			CE04LW1HR47M	ELECTRO 0.47UF 50WV		

L:Scandinavia K:USA P:Canada R:Mexico S : SINGAPORE MADE A : A DECK
Y:PX(Far East, Hawaii) T:England E:Europe G:Germany W : MALAYSIA MADE B : B DECK
Y:AAFES(Europe) X:Australia M, I:Other Areas ⚠ indicates safety critical components.

PARTS LIST

* New Parts
Parts without Parts No. are not supplied.
Les articles non mentionnes dans le Parts No. ne sont pas fournis.
Teile ohne Parts No. werden nicht geliefert.

No.10

Ref. No. 参照番号	Address 位置	New Parts 新	Parts No. 部品番号	Description 部品名／規格	Destination 仕向	Remarks 備考
C415,416			CE04LW1H2R2M	ELECTRO 2.2UF 50WV		
C417,418			CE04LW1H0R1M	ELECTRO 0.1UF 50WV		
C419,420			CE04LW1V100M	ELECTRO 10UF 35WV		
C421,422			CE04LW1H010M	ELECTRO 1.0UF 50WV		
C423,424			CE04LW1HR47M	ELECTRO 0.47UF 50WV		
C425,426			CE04LW1A101M	ELECTRO 100UF 10WV		
C427,428			CE04LW1H2R2M	ELECTRO 2.2UF 50WV		
C429-432			CK73FB1H222K	CHIP C 2200PF K		
C501			CE04LW1H010M	ELECTRO 1.0UF 50WV		
C502			CK73FB1H103K	CHIP C 0.010UF K		
C503			CE04LW1H0R1M	ELECTRO 0.1UF 50WV		
C504			CE04LW1C101M	ELECTRO 100UF 16WV		
C506			CE04LW1C220M	ELECTRO 22UF 16WV		
C507			CE04LW1V100M	ELECTRO 10UF 35WV		
C508			CE04LW1H2R2M	ELECTRO 2.2UF 50WV		
C603,604			CC73FSL1H221J	CHIP C 220PF J		
C619-622			CE04LW1H010M	ELECTRO 1.0UF 50WV		
C623,624			CE04LW1V100M	ELECTRO 10UF 35WV		
C625			CK73FB1E104K	CHIP C 0.10UF K		
C633,634			CE04LW1H220M	ELECTRO 22UF 50WV		
C635,636			CQ92FM1H473J	MYLAR 0.047UF J		
C639,640			CK45FB1H222K	CERAMIC 2200PF K		
C643,644			CE04LW1C220M	ELECTRO 22UF 16WV		
C645			CK73FB1H222K	CHIP C 2200PF K		
C646			CK45FB1H222K	CERAMIC 2200PF K		
C701			CE04LW1C470M	ELECTRO 47UF 16WV		
C702-704			CC73FSL1H221J	CHIP C 220PF J		
C705			CE04LW1V100M	ELECTRO 10UF 35WV		
C706,707			CE04LW1C470M	ELECTRO 47UF 16WV		
C708			CC73FSL1H102J	CHIP C 1000PF J		
C710			CE04HW1A470M	NP-ELEC 47UF 10WV		
C711			CE04LW1H100M	ELECTRO 10UF 50WV		
C712			CE04LW1H101M	ELECTRO 100UF 50WV		
C713			CE04LW1H2R2M	ELECTRO 2.2UF 50WV		
C714			CE04LW1V470M	ELECTRO 47UF 35WV		
C715,716			C90-3541-05	ELECTRO 3300UF 40WV		
C717			CE04LW1H471M	ELECTRO 470UF 50WV		
C718			CE04LW1V330M	ELECTRO 33UF 35WV		
C719,720			CQ92FM1H104J	MYLAR 0.10UF J		
C721,722			CE04LW1C470M	ELECTRO 47UF 16WV		
C723			CE04LW1V332M	ELECTRO 3300UF 35WV		
C725			CE04LW1C470M	ELECTRO 47UF 16WV		
C726			CE04EW1C471M	ELECTRO 470UF 16WV		
C727			CE04LW1E222M	ELECTRO 2200UF 25WV		
C728,729			CQ92FM1H104J	MYLAR 0.10UF J		
C730			CE04LW1A470M	ELECTRO 47UF 10WV		
C731,732			CK45FF1H103Z	CERAMIC 0.010UF Z		
C733,734			CE04LW1C470M	ELECTRO 47UF 16WV		
C736			CE04LW1V100M	ELECTRO 10UF 35WV		
C737			CE04LW1C101M	ELECTRO 100UF 16WV		
C738			CE04LW1C470M	ELECTRO 47UF 16WV		
C740			CE04HW1H2R2M	NP-ELEC 2.2UF 50WV		
C741			CC73FSL1H221J	CHIP C 220PF J		
C742			CE04LW1H010M	ELECTRO 1.0UF 50WV		
C743			CE04HW1E4R7M	NP-ELEC 4.7UF 25WV		

L:Scandinavia K:USA P:Canada R:Mexico S : SINGAPORE MADE A : A DECK
Y:PX(Far East, Hawaii) T:England E:Europe G:Germany W : MALAYSIA MADE B : B DECK
Y:AAFES(Europe) X:Australia M, I:Other Areas ⚠ indicates safety critical components.

* New Parts
Parts without Parts No. are not supplied.
Les articles non mentionnes dans le Parts No. ne sont pas fournis.
Teile ohne Parts No. werden nicht geliefert.

No.11

Ref. No. 参照番号	Address 位置	New Parts 新	Parts No. 部品番号	Description 部品名／規格	Destination 仕向	Remarks 備考
C744			CC73FSL1H102J	CHIP C 1000PF J		
C745			CE04LW1E470M	ELECTRO 47UF 25WV		
C746			CC73FCH1H220J	CHIP C 22PF J		
C747			CK73FB1H222K	CHIP C 2200PF K		
C748-751			CQ92FM1H104J	MYLAR 0.10UF J		
C752			CE04LW1C470M	ELECTRO 47UF 16WV		
C753			CE04LW1A101M	ELECTRO 100UF 10WV		
C754			CK73FB1H103K	CHIP C 0.010UF K		
C757,758			CQ92FM1H104J	MYLAR 0.10UF J		
C759			C91-1488-05	MF 6800PF 250VAC		
C760			CK45FF1H103Z	CERAMIC 0.010UF Z		
J601	1I	*	E63-0115-05	PHONO JACK		
J602	2H		E11-0220-05	MINIATURE PHONE JACK		
J603	2H		E11-0209-05	PHONE JACK		
J604	1I		E70-0045-05	LOCK TERMINAL BOARD		
⚠ F1	3I		F06-2021-05	FUSE (SEMKO) (250V T2AL)	YMX	
⚠ F1 -3	3I		F05-4028-05	FUSE (UL) (125V 4A)	KRP	
⚠ F2 ,3	3I		F05-4025-05	FUSE (SEMKO) (250V T4A)	YMX	
⚠ F4	3I		F05-1623-05	FUSE (SEMKO) (250V T1.6A)	YMX	
⚠ F4	3I		F05-1628-05	FUSE (UL) (250V 1.6A)	KRP	
⚠ F5	3I		F04-1026-05	FUSE (UL) (250V 1A)	KRP	
⚠ F5	3I		F06-1022-05	FUSE (SEMKO) (250V T1AL)	YMX	
⚠ F6	3I		F06-2021-05	FUSE (SEMKO) (250V T2AL)	YM	
CN601-606			J13-0075-05	FUSE CLIP	KRPX	
CN601-608			J13-0075-05	FUSE CLIP	YM	
CN613-616			J13-0075-05	FUSE CLIP		
J607,608			J11-0098-05	WIRE CLAMPER		
L201			L40-1001-17	SMALL FIXED INDUCTOR(10UH,K)		
L202			L40-1091-17	SMALL FIXED INDUCTOR(1UH, K)		
L401,402			L79-1201-05	LC FILTER		
L403,404			L40-1035-20	SMALL FIXED INDUCTOR(10MH,J)		
X201			L78-0299-05	RESONATOR		
X202			L78-0605-05	RESONATOR (8.38MHZ)		
R524			RD14NB2E100J	RD 10 J 1/4W		
R675-678			RD14NB2E100J	RD 10 J 1/4W		
R679-682			RS14KB3DR22J	FL-PROOF RS 0.22 J 2W		
R685,686			RS14KB3A4R7J	FL-PROOF RS 4.7 J 1W		
R689-692			RD14NB2E102J	RD 1.0K J 1/4W		
R701			RD14NB2E101J	RD 100 J 1/4W		
R703			RD14NB2E010J	RD 1.0 J 1/4W		
R704			RD14NB2E151J	RD 150 J 1/4W		
R706			RD14NB2E100J	RD 10 J 1/4W		
R730			RS14KB3D1R0J	FL-PROOF RS 1.0 J 2W		
R733			RD14NB2E222J	RD 2.2K J 1/4W		
R736			RD14NB2E101J	RD 100 J 1/4W		
R748			RD14GB2E101J	FL-PROOF RD 100 J 1/4W		
R765			RS14KB3D330J	FL-PROOF RS 33 J 2W		
R772			RD14NB2E101J	RD 100 J 1/4W		
⚠ R787			R92-1769-05	CARBON 3.3M J 1/2W	KRP	
VR201			R12-3688-05	TRIMMING POT.(47K ｱﾋ)		
VR601	2H	*	R31-0003-05	VARIABLE RESISTOR		
VR602	1H	*	R31-0002-05	VARIABLE RESISTOR		
W52			R92-0670-05	CHIP R 0 OHM		

L:Scandinavia K:USA P:Canada R:Mexico S : SINGAPORE MADE A : A DECK
Y:PX(Far East, Hawaii) T:England E:Europe G:Germany W : MALAYSIA MADE B : B DECK
Y:AAFES(Europe) X:Australia M, I:Other Areas ⚠ indicates safety critical components.

* New Parts
Parts without Parts No. are not supplied.
Les articles non mentionnes dans le Parts No. ne sont pas fournis.
Teile ohne Parts No. werden nicht geliefert.

No.12

Ref. No. 参照番号	Address 位置	New Parts 新	Parts No. 部品番号	Description 部品名／規格	Destination 仕向	Remarks 備考
W221			R92-0670-05	CHIP R 0 OHM		
W601-619			R92-0670-05	CHIP R 0 OHM		
W632,633			R92-0670-05	CHIP R 0 OHM		
W635,636			R92-0679-05	CHIP R 0 OHM		
W637			R92-0670-05	CHIP R 0 OHM		
K601			S51-2094-05	MAGNETIC RELAY		
⚠ S601	2I		S31-2322-05	SLIDE SWITCH	YM	
D201-209			MA110	DIODE		
D501			HSS104	DIODE		
D501			1SS133	DIODE		
D502			HZS5.1N(B2)	ZENER DIODE		
D502			RD5.1ES(B2)	ZENER DIODE		
D601,602			HSS104	DIODE		
D601,602			1SS133	DIODE		
D603			D3SBA20F03	DIODE		
D603			RBV-402LFA	DIODE		
D604			HSS104A	DIODE		
D604			1SS131	DIODE		
D605			S5688B	DIODE		
D605			1SR139-100	DIODE		
D606			KBP02ML-6127	DIODE		
D607-610			S5688B	DIODE		
D607-610			1SR139-100	DIODE		
D611,612			HSS104	DIODE		
D611,612			1SS133	DIODE		
D613			HZS6.8N(B2)	ZENER DIODE		
D613			RD6.8ES(B2)	ZENER DIODE		
D614			HZS16N(B2)	ZENER DIODE		
D614			RD16ES(B2)	ZENER DIODE		
D615,616			HZS13N(B2)	ZENER DIODE		
D615,616			RD13ES(B2)	ZENER DIODE		
D617			HZS2.7N(B2)	ZENER DIODE		
D617			RD2.7ES(B2)	ZENER DIODE		
D618			HZS6.8N(B2)	ZENER DIODE		
D618			RD6.8ES(B2)	ZENER DIODE		
D619,620			HSS104	DIODE		
D619,620			1SS133	DIODE		
D621			HZS3.9N(B2)	ZENER DIODE		
D621			RD3.9ES(B2)	ZENER DIODE		
D622-629			MA110	DIODE		
D630,631			S5688B	DIODE		
D630,631			1SR139-100	DIODE		
D632,633			MA110	DIODE		
D634			HZS5.1N(B2)	ZENER DIODE		
D634			RD5.1ES(B2)	ZENER DIODE		
D635,636			MA110	DIODE		
D640			HZS10N(B2)	ZENER DIODE		
D641-643			HSS104	DIODE		
D641-643			1SS133	DIODE		
IC201			AN8806SB	ANALOG IC		
IC202			BA6398FP	ANALOG IC		
IC203		*	MN66271RA	MOS-IC		
IC204		*	UPD78012BGC-634	MI-COM IC		
IC205,206			TA8409S	IC(MOTOR CONTROL)		

L:Scandinavia K:USA P:Canada R:Mexico S : SINGAPORE MADE A : A DECK
Y:PX(Far East, Hawaii) T:England E:Europe G:Germany W : MALAYSIA MADE B : B DECK
Y:AAFES(Europe) X:Australia M, I:Other Areas ⚠ indicates safety critical components.

* New Parts
Parts without Parts No. are not supplied.
Les articles non mentionnes dans le Parts No. ne sont pas fournis.
Teile ohne Parts No. werden nicht geliefert.

No.13

Ref. No. 参照番号	Address 位置	New Parts 新	Parts No. 部品番号	Description 部品名／規格	Destination 仕向	Remarks 備考
IC207			NJM2100M	IC(OP AMPLIFIER)		
IC401		*	HA12182NT	IC(DOLBY B NR REC EQUALIZER)		
IC601		*	NJU7313AM	ANALOG IC		
IC602		*	CXA1642M	ANALOG IC		
IC604			NJM4565M	IC(OP AMP X2)		
IC605			TA78057S	IC(VOLTAGE REGULATOR/+5.75V)		
IC606			NJM4565M	IC(OP AMP X2)		
Q201			2SA1534A(R,S)	TRANSISTOR		
Q202			2SA954(L,K)	TRANSISTOR		
Q203			2SC2412K	TRANSISTOR		
Q401,402			DTC124EU	DIGITAL TRANSISTOR		
Q403-406			2SD1757K	TRANSISTOR		
Q503			DTA124ES	DIGITAL TRANSISTOR		
Q504			2SC2412K	TRANSISTOR		
Q505			2SC3940A(R,S)	TRANSISTOR		
Q506			DTA124ES	DIGITAL TRANSISTOR		
Q507			DTC124ES	DIGITAL TRANSISTOR		
Q513			2SC2412K	TRANSISTOR		
Q601,602			2SC4137(V,W)	TRANSISTOR		
Q603,604		*	2SD2493	TRANSISTOR		
Q605,606		*	2SB1624	TRANSISTOR		
Q607,608			2SC1845(F,E)	TRANSISTOR		
Q609			2SD1893	TRANSISTOR		
Q611			2SC3246(H,J)	TRANSISTOR		
Q612,613			2SC2412K	TRANSISTOR		
Q614			2SA954(L,K)	TRANSISTOR		
Q615-617			2SA1037K	TRANSISTOR		
Q618			2SD2012	TRANSISTOR		
Q619			2SA933S(Q,R)	TRANSISTOR		
Q620			2SD2012	TRANSISTOR		
Q621,622			2SC2412K	TRANSISTOR		
Q623			2SA933S(Q,R)	TRANSISTOR		
Q624			2SD2012	TRANSISTOR		
Q625,626			2SC2412K	TRANSISTOR		
A1		*	W02-1190-05	FM FRONT-END ASSY		
CD MECHANISM ASSY(D40-1350-05)						
101	2B	*	A10-3119-08	CHASSIS (MAIN)		
102	3A	*	A15-0084-08	FRAME (MD)		
105	2A	*	D10-3457-08	SLIDER (LIFT)		
107	2B	*	D10-3459-08	LEVER (LOCK)		
108	2A	*	D10-3460-08	LEVER (BRAKE)		
109	1B	*	D10-3496-08	FRICTION ARM ASSY		
110	2A		D10-3492-08	FEED SHAFT		
113	1A	*	D13-1599-08	GEAR (IDLER)		
114	2B	*	D13-1600-08	GEAR (LOAD)		
115	1B	*	D13-1601-08	GEAR (CENTER)		
117	2A	*	D13-1603-08	CAM GEAR(UP/DOWN)		
118	1A	*	D13-1604-08	GEAR (HELICAL)		
119	2A		D13-1643-08	GEAR		
120	2B	*	D14-0361-08	ROLLER (TRAY)		
122	2B	*	D15-0366-08	PULLEY (LOAD)		
123	1B	*	D16-0363-08	DRIVE BELT		
125	2B	*	D21-1762-08	SHAFT (PULLEY)		

L:Scandinavia K:USA P:Canada R:Mexico S : SINGAPORE MADE A : A DECK
Y:PX(Far East, Hawaii) T:England E:Europe G:Germany W : MALAYSIA MADE B : B DECK
Y:AAFES(Europe) X:Australia M, I:Other Areas ⚠ indicates safety critical components.

PARTS LIST

* New Parts
Parts without Parts No. are not supplied.
Les articles non mentionnes dans le Parts No. ne sont pas fournis.
Teile ohne Parts No. werden nicht geliefert.

No.14

Ref. No. 参照番号	Address 位置	New Parts 新	Parts No. 部品番号	Description 部品名／規格	Destination 仕向	Remarks 備考
130	3B	*	E32-0343-04	TERMINAL		
131	3A	*	E35-0806-08	8P WIRE (TU-A)		
132	3A	*	E35-0807-08	8P WIRE (TU-B)		
133	3B	*	E35-0808-08	6P WIRE		
134	2A	*	E35-0809-08	6P FRAT WIRE		
135	3A	*	E35-0810-08	6P WIRE (TU-C)		
136	2A	*	E35-0811-08	3P WIRE		
137	3A		E40-3264-05	CONNECTOR		
140	1A	*	F07-0732-08	COVER (TRAY)		
141	3B	*	F07-0736-08	COVER		
144	2A,3A		G01-3693-08	COMPRESSION SPRING		
145	3A	*	G01-3660-08	SPRING (MD-A)		
146	3A	*	G01-3661-08	SPRING (MD-B)		
148	3A	*	G01-3663-08	SPRING (CAM)		
149	2B	*	G01-3664-08	SPRING (LOCK)		
150	2A	*	G01-3665-08	SPRING (BRAKE)		
152	1A,1B		G16-0821-04	SHEET (TRAY)		
155	2A	*	J02-1101-08	INSULATOR		
156	1B	*	J11-0301-08	CLAMPER		
157	1B	*	J19-3659-08	BRACKET (CLAMP)		
158	1B	*	J19-3660-08	BRACKET (GEAR)		
159	2B	*	J19-3661-08	BRACKET (TRAY)		
160	3A		J61-0081-05	SK BINDER SKB-100		
161	1A	*	J99-0541-08	TRAY (SLIDE)		
162	1A	*	J99-0542-08	TRAY (ROTARY)		
163	3A		J70-0619-08	MOTOR PCB		
164	1B		J90-0818-08	CENTER RING		
L		*	N09-3052-08	SCREW		
M		*	N09-3053-08	SCREW		
N		*	N09-3107-08	SCREW		
165	1B		S33-2061-05	LEVER SWITCH		
166	2A,2B	*	S64-0015-08	LEVER SWITCH JPS1220-0201		
167	3A		S74-0038-08	LEAF SWITCH		
170	1B		T50-1055-04	YOKE		
171	1B		T99-0544-05	MAGNET		
DM	3A		A11-1038-08	TT CHASSIS ASSY		
FM	3A		T42-0676-08	MOTOR GEAR (FEED)		
LM	3B	*	T42-0682-08	MOTOR PULLEY ASSY		
PU	3A		T25-0011-05	PICKUP (KSS-210A)		
RTM	2A	*	T42-0683-08	MOTOR WORM ASSY		
CASSETTE MECHANISM ASSY(D40-134X-XX)						
401	2C	*	A10-3174-08	HEAD CHASSIS		
405	2E	*	D01-0175-08	FLYWHEEL (R) ASSY		
406	1D	*	D01-0176-08	FLYWHEEL (L) ASSY		
407	1C	*	D10-3468-08	INTER LOCK ARM (L)(A MECHA)		
408	2D	*	D10-3469-08	INTER LOCK ARM (R)(B MECHA)		
409	1E	*	D10-3470-08	SHIFT LEVER		
410	2E	*	D10-3471-08	HEAD CHANGE ARM		
411	1E	*	D10-3472-08	CAM GEAR		
412	1C	*	D10-3476-08	EJECT LEVER (L) (A MECHA)		
413	2E	*	D10-3477-08	EJECT LEVER (R) (B MECHA)		
414	2C	*	D10-3478-08	SELET LEVER		

L:Scandinavia K:USA P:Canada R:Mexico S : SINGAPORE MADE A : A DECK
Y:PX(Far East, Hawaii) T:England E:Europe G:Germany W : MALAYSIA MADE B : B DECK
Y:AAFES(Europe) X:Australia M, I:Other Areas ⚠ indicates safety critical components.

* New Parts
Parts without Parts No. are not supplied.
Les articles non mentionnes dans le Parts No. ne sont pas fournis.
Teile ohne Parts No. werden nicht geliefert.

No.15

Ref. No. 参照番号	Address 位置	New Parts 新	Parts No. 部品番号	Description 部品名／規格	Destination 仕向	Remarks 備考
415	1D	*	D10-3479-08	CHASSIS OS ASSY		
416	2C	*	D10-3480-08	C/R LEVER		
420	2C	*	D13-0981-08	ROTATION GEAR		
421	1C	*	D13-1616-08	REW GEAR		
422	1C,2D	*	D13-1617-08	REEL GEAR		
423	1D	*	D13-1618-08	IDLER GEAR		
424	2C	*	D13-1621-08	RETURN GEAR		
425	1E	*	D13-1622-08	TRIGGER ARM		
426	2D	*	D14-0367-08	PINCH ARM (R) ASSY		
427	2C	*	D14-0368-08	PINCH ARM (L) ASSY		
430	1D	*	D15-0369-08	IDLER PULLEY		
431	2E	*	D16-0375-08	DRIVE BELT		
432	2E	*	D16-0376-08	CLUTCH BELT		
433	1C,2C		D19-0270-18	REEL CAP (A)		
434	1D	*	D19-0287-08	CLUTCH ARM ASSY		
440	1E		E35-0396-08	15P FLAT RIBBON WIRE		
441	2C	*	E35-0985-08	3P HEAD WIRE ASSY (A MECHA)		
441	2C	*	E35-0987-08	5P HEAD WIRE ASSY (B MECHA)		
442	1E	*	E35-0986-08	MOTOR WIRE		
445	1C,2D	*	G01-3709-08	B.T SPRING		
446	1D	*	G01-3710-08	SHIFT LEVER SP		
447	1E	*	G01-3711-08	TRIGGER ARM SP		
448	2E	*	G01-3712-08	HEAD CHANGE ARM SP		
449	1C,2E	*	G01-3713-08	EJECT SP		
450	2C	*	G01-3714-08	C/R LEVER SP		
451	2C	*	G01-3715-08	SELECT SP		
452	2C	*	G01-3716-08	SHIFT SP		
453	1C	*	G01-3717-08	INTER LOCK SP (L)		
454	2D	*	G01-3723-08	INTER LOCK SP (R)		
455	2C	*	G01-3718-08	RETURN SPR		
456	2C	*	G01-3719-08	FWD SPR		
457	2C	*	G01-3720-08	HEAD RETURN PLATE SP		
458	2D	*	G01-3721-08	BRAKE SP (R)		
459	1D	*	G01-3722-08	BRAKE SP (L)		
460	1D	*	G01-3724-08	CLUTCH ARM SPRING (B)		
461	1D	*	G01-3725-08	CLUTCH SP		
462	1D		G02-0913-08	PACK SPRING		
463	2C	*	G02-1043-08	AZIMUTH SPR		
465	2C	*	G11-2117-08	HEAD WIRE CLAMP		
466	1D	*	G11-2205-08	TUBE		
467	2D		G16-0791-08	REFLECT SEAL		
470	1E		J19-3652-08	CABLE HOLDER		
471	2C	*	J19-3709-08	HEAD BASE		
472	2C	*	J21-6135-08	HEAD RETURN PLATE		
473	2C	*	J21-6184-08	HEAD PLATE ASSY		
474	2C		J42-0183-08	REEL BUSH		
475	2D	*	J69-0086-08	FILAMENT TAPE		
AA			N19-1316-08	POLY WASHER		
AB			N19-1354-08	NYLON WASHER		
AC			N19-1355-08	NYLON WASHER		
AD		*	N19-1384-08	POLY WASHER		
AE		*	N19-1385-08	POLY WASHER		
AF		*	N19-1386-08	POLY WASHER		

L:Scandinavia K:USA P:Canada R:Mexico S : SINGAPORE MADE A : A DECK
Y:PX(Far East, Hawaii) T:England E:Europe G:Germany W : MALAYSIA MADE B : B DECK
Y:AAFES(Europe) X:Australia M, I:Other Areas ⚠ indicates safety critical components.

PARTS LIST

RXD-C3/C3L

* New Parts
Parts without **Parts No.** are not supplied.
Les articles non mentionnes dans le **Parts No.** ne sont pas fournis.
Teile ohne **Parts No.** werden nicht gellefert.

No.16

Ref. No. 参照番号	Address 位置	New Parts 新	Parts No. 部品番号	Description 部品名／規格	Destination 仕向	Remarks 備考
AG		*	N19-1387-08	TEFRON WASHER		
AH		*	N19-1388-08	POLY WASHER		
AK			N09-2900-08	SCREW		
S			N09-1497-08	TAP TITE SCREW		
T			N09-2871-08	TAPPING SCREW		
V			N09-2876-08	HEAD SCREW		
W			N09-2901-08	BIND TAP TITE SCREW		
X		*	N09-3112-08	AZIMUTH SCREW		
Y			N19-1287-08	POLY WASHER		
Z			N19-1288-08	POLY WASHER		
480	1E,2E	*	S74-0033-08	REC SWITCH		
481	1E,2E	*	S74-0042-08	PLAY SWITCH		
484	1E	*	T94-0233-08	SOLENOID ASSY		
485	1E,2E		T95-0125-08	PHOTO INTERRUPTER		
MM	1E	*	T42-0687-08	MOTOR ASSY		
PH	2H		T31-0066-08	ROTATION HEAD MK10P-AB215(A)		
RPRH			T31-0020-08	ROTATION HEAD YK56R-AA405(B)		

L:Scandinavia K:USA P:Canada R:Mexico S : SINGAPORE MADE A : A DECK
Y:PX(Far East, Hawaii) T:England E:Europe G:Germany W : MALAYSIA MADE B : B DECK
Y:AAFES(Europe) X:Australia M, I:Other Areas ⚠ indicates safety critical components

RXD-C3/C3L

SPECIFICATIONS

Amplifier section

Rated power output

32 watts per channel minimum RMS, both channels driven, at 6 Ω from 60 Hz to 20,000 Hz with no more than 0.7 % total harmonic distortion. (FTC)

Input sensitivity / Impedance
- **AUX ..... 200 mV / 47 kΩ**
- **MIC ..... 2.7 mV / 47 kΩ**

Total harmonic distortion
..... 0.2 % (1 kHz, 1/2 rated power, 6 Ω)

Signal to noise ratio
- **AUX ..... 80 dB (IHF'66)**

FM Tuner section

Tuning frequency range ..... 87.5 MHz ~ 108 MHz
Sensitivity (IHF) ..... 13.2 dBf (1.2 μV at 75 Ω)

AM Tuner section

Tuning frequency range ..... 530 kHz ~ 1,700 kHz
Usable sensitivity ..... 12 μV / (500 μV / m)

Cassette deck section

Track ..... 4-track, 2-channel stereo
Recording system ..... AC bias system (Frequency: 105 kHz)

Heads
- **A deck — Playback head 1**
- **B deck — Playback / recording head 1**
- **Erasing head 1**

Motors
- **A deck 1**
- **B deck 1**

Fast winding time ..... Approx. 120 seconds (C-60 tape)
Wow and flutter ..... 0.15 % (W.R.M.S.)

CD player section

Laser ..... Semiconductor laser
Playing rotation ..... 200 rpm ~ 500 rpm (CLV)
Wow & Flutter ..... Unmeasurable Limit

General

Power consumption ..... 100 W
Dimensions ..... W: 270 mm (10-5 / 8")
H: 305 mm (12")
D: 339 mm (13-3 / 8")
Weight (net) ..... 7.6 kg (16.8 lb)

Note:
KENWOOD follows a policy of continuous advancements in development. For this reason specifications may be changed without notice.

KENWOOD CORPORATION
14-6, Dogenzaka 1-chome, Shibuya-ku, Tokyo, 150 Japan
KENWOOD SERVICE CORPORATION
P.O. BOX 22745, 2201 East Dominguez St., Long Beach, CA 90801-5745, U.S.A.
KENWOOD ELECTRONICS CANADA INC.
6070 Kestrel Road, Mississauga, Ontario, Canada L5T 1S8
KENWOOD ELECTRONICS LATIN AMERICA S.A.
P.O. BOX 55-2791, Piso 6 Plaza Chase, Cl. 47 y Aquilino de la Guardia, Panama, Republic de Panama
TRIO-KENWOOD U.K. LIMITED
Kenwood House, Dwight Road, Watford, Herts, WD1 8EB, United Kingdom
KENWOOD ELECTRONICS BENELUX N.V.
Mechelsesteenweg 418 B-1930 Zaventem, Belgium
KENWOOD ELECTRONICS DEUTSCHLAND GMBH
Rembrücker Str. 15, 63150 Heusenstamm, Germany
TRIO-KENWOOD FRANCE S.A.
13 Boulevard Ney, 75018 Paris, France
KENWOOD ELECTRONICS ITALIA S.p.A.
Via G. Sirtori, 7/9 20129 Milano, Italy
KENWOOD ESPANA S.A.
Bolivia, 239-08020 Barcelona, Spain
KENWOOD ELECTRONICS AUSTRALIA PTY. LTD. (A.C.N. 001 499 074)
P.O. BOX 504, 8 Figtree Drive, Australia Centre, Homebush, N.S.W. 2140, Australia
KENWOOD & LEE ELECTRONICS, LTD.
Unit 3712-3724, Level 37 Tower 1, Metroplaza, 223 Hing Fong Road, Kwai Fong N.T. Hong Kong
KENWOOD ELECTRONICS SINGAPORE PTE LTD
No. 1 Genting Lane #07-00, Singapore, 1334